STC15series MCU Data Sheet

—— Super Strong Anti-Disturbance, Super Advanced Encryption
—— Adopt the eighth generation of STC Encryption technology
—— No external cystal and reset circuit
—— external EEPROM can be saved by IAP technology
—— ISP/IAP, Online programming, No need for programmer and emulator
—— Large capacity of 2K bytes SRAM
—— Two UARTs, Two independent Serial Ports
—— High speed 8-channels and 10-bits A/D Converter
—— 8051 MCU with 1 clock per machine cycle
—— High Speed and Reliability
—— Super low power consumption, Very cheap
—— Super Strong Anti-static electricity, Super Strong Anti-Disturbance

STC15F2K08S2	STC15L2K08S2
STC15F2K16S2	STC15L2K16S2
STC15F2K24S2	STC15L2K24S2
STC15F2K32S2	STC15L2K32S2
STC15F2K40S2	STC15L2K40S2
STC15F2K48S2	STC15L2K48S2
STC15F2K56S2	STC15L2K56S2
STC15F2K60S2	STC15L2K60S2
IAP15F2K61S2	IAP15L2K61S2

STC MCU Limited.

Adopt the eighth generation of STC encryption technology, there is a reward of 100 thousands yuan RMB for the gaps in encryption now.

STC-ISP: the most convenient software of online programming, no need for programmer and emulator.

STC — the global first brand of 8051 MCU, the biggest design company of 8051 MCU in the world

China's home-grown independent intellectual property rights, Please all Chinese people support us, your surport is a powerful guarantee of China' home-grown business development.

All products are baked 8 hours in high-temperature 175℃ after be packaged, Manufacture guarantee good quality.

Technical website: **www.STCMCU.com** **www.GXWMCU.com**

Update Date: 2015/10/10

CONTENTS

Chapter 1. General Overview of the whole STC15 series 15

1.1 General Overview of STC15F2K60S2 series MCU 15

1.1.1 Introduction of STC15F2K60S2 series MCU (In abundant supply) 15

1.1.2 Block diagram of STC15F2K60S2 series 18

1.1.3 Pin Configurations of STC15F2K60S2 series MCU 19

1.1.4 STC15F2K60S2 series Selection and Price Table 23

1.1.5 STC15F2K60S2 series Package and Price Table 24

1.1.6 Naming rules of STC15F2K60S2 series MCU 25

1.1.7 Minimum Application System of STC15F2K60S2 Series MCU 26

1.1.8 Circuit Diagram connecting External Crystal Oscillator and Reset 27

1.1.9 Application Circuit Diagram for ISP of STC15F2K60S2 series MCU 28

1.1.9.1 Application Circuit Diagram for ISP using RS-232 Converter 28

1.1.9.2 Application Circuit Diagram for ISP using USB Chip PL-2303SA to convert Serial Port 29

1.1.9.3 Application Circuit Diagram for ISP using USB Chip PL-2303HXD / PL-2303HX to convert Serial Port 30

1.1.10 Pin Descriptions of STC15F2K60S2 series MCU 31

1.2 General Overview of STC15F101W series MCU 36

——Recommend STC15W10x series to Replace STC15L101W series 36

1.2.1 Introduction of STC15F101W series MCU (In abundant supply) 36

1.2.2 Block diagram of STC15F101W series 38

1.2.3 Pin Configurations of STC15F101W series MCU 39

1.2.4 STC15F101W series Selection and Price Table 40

1.2.5 Naming rules of STC15F101W series MCU 41

1.2.6 Application Circuit Diagram for ISP of STC15F101W series MCU 42

1.2.6.1 Application Circuit Diagram for ISP using RS-232 Converter 42

1.2.6.2 Application Circuit Diagram for ISP using USB Chip PL-2303SA to convert Serial Port 43

1.2.6.3 Application Circuit Diagram for ISP using USB Chip PL-2303HXD / PL-2303HX to convert Serial Port 44

1.2.7 Pin Descriptions of STC15F101W series MCU 45

1.3 General Overview of STC15W10x series MCU 46

1.3.1 Introduction of STC15W10x series MCU (In abundant supply) 46

1.3.2 Block diagram of STC15W10x series 48

1.3.3 Pin Configurations of STC15W10x series MCU 49

1.3.4 STC15W10x series Selection and Price Table 50

1.3.5 Naming rules of STC15W10x series MCU 51

1.3.6 Application Circuit Diagram for ISP of STC15W10x series MCU 52

1.3.6.1 Application Circuit Diagram for ISP using RS-232 Converter 52

STC MCU Limited

1.3.6.2 Application Circuit Diagram for ISP using USB Chip PL-2303SA to convert Serial Port 53
1.3.6.3 Application Circuit Diagram for ISP using USB Chip PL-2303HXD / PL-2303HX to convert Serial Port ..54
1.3.7 Pin Descriptions of STC15W10x series MCU 55
1.4 General Overview of STC15W201S series MCU 56
1.4.1 Introduction of STC15W201S series MCU (In abundant supply) 56
1.4.2 Block diagram of STC15W201S series 58
1.4.3 Pin Configurations of STC15W201S series MCU 59
1.4.4 STC15W201S series Selection and Price Table 61
1.4.5 Naming rules of STC15W201S series MCU 62
1.4.6 Application Circuit Diagram for ISP of STC15W201S series MCU 63
1.4.6.1 Application Circuit Diagram for ISP using RS-232 Converter 63
1.4.6.2 Application Circuit Diagram for ISP using USB Chip PL-2303SA to convert Serial Port 64
1.4.6.3 Application Circuit Diagram for ISP using USB Chip PL-2303HXD / PL-2303HX to convert Serial Port ..65
1.4.7 Pin Descriptions of STC15W201S series MCU 66
1.5 General Overview of STC15W401AS series MCU 68
1.5.1 Introduction of STC15W401AS series MCU (In abundant supply) 68
1.5.2 Block diagram of STC15W401AS series 71
1.5.3 Pin Configurations of STC15W401AS series MCU 72
1.5.4 STC15W401AS series Selection and Price Table 76
1.5.5 STC15W401AS series Package and Price Table 76
1.5.6 Naming rules of STC15W401AS series MCU 77
1.5.7 Application Circuit Diagram for ISP of STC15W401AS series MCU 78
1.5.7.1 Application Circuit Diagram for ISP using RS-232 Converter 78
1.5.7.2 Application Circuit Diagram for ISP using USB Chip PL-2303SA to convert Serial Port 79
1.5.7.3 Application Circuit Diagram for ISP using USB Chip PL-2303HXD / PL-2303HX to convert Serial Port ..80
1.5.8 Pin Descriptions of STC15W401AS series MCU 81
1.6 General Overview of STC15W404S series MCU 84
1.6.1 Introduction of STC15W404S series MCU (In abundant supply) 84
1.6.2 Block diagram of STC15W404S series 87
1.6.3 Pin Configurations of STC15W404S series MCU 88
1.6.4 STC15W404S series Selection and Price Table 92
1.6.5 STC15W404S series Package and Price Table 92
1.6.6 Naming rules of STC15W404S series MCU 93
1.6.7 Application Circuit Diagram for ISP of STC15W404S series MCU 94
1.6.7.1 Application Circuit Diagram for ISP using RS-232 Converter 94
1.6.7.2 Application Circuit Diagram for ISP using USB Chip PL-2303SA to convert Serial Port 95
1.6.7.3 Application Circuit Diagram for ISP using USB Chip PL-2303HXD / PL-2303HX to convert Serial Port ..96
1.6.8 Pin Descriptions of STC15W404S series MCU 97
1.7 General Overview of STC15W1K16S series MCU 100

STC MCU Limited

1.7.1 Introduction of STC15W1K16S series MCU (In abundant supply) 100
1.7.2 Block diagram of STC15W1K16S series 103
1.7.3 Pin Configurations of STC15W1K16S series MCU 104
1.7.4 STC15W1K16S series Selection and Price Table 108
1.7.5 STC15W1K16S series Package and Price Table 108
1.7.6 Naming rules of STC15W1K16S series MCU 109
1.7.7 Application Circuit Diagram for ISP of STC15W1K16S series MCU 110
1.7.7.1 Application Circuit Diagram for ISP using RS-232 Converter 110
1.7.7.2 Application Circuit Diagram for ISP using USB Chip PL-2303SA to convert Serial Port 111
1.7.7.3 Application Circuit Diagram for ISP using USB Chip PL-2303HXD / PL-2303HX to convert Serial Port 112
1.7.8 Pin Descriptions of STC15W1K16S series MCU 113
1.8 General Overview of STC15W4K32S4 series MCU 116
1.8.1 Introduction of STC15W4K32S4 series MCU 116
1.8.2 Block diagram of STC15W4K32S4 series 119
1.8.3 Pin Configurations of STC15W4K32S4 series MCU 120
1.8.4 STC15W4K32S4 series Selection and Price Table 125
1.8.5 Naming rules of STC15W4K32S4 series MCU 126
1.8.6 Application Circuit Diagram for ISP of STC15W4K32S4 series MCU 127
1.8.6.1 Application Circuit Diagram for ISP using RS-232 Converter 127
1.8.6.2 Application Circuit Diagram for ISP using USB Chip PL-2303SA to convert Serial Port 128
1.8.6.3 Application Circuit Diagram for ISP using USB Chip PL-2303HXD / PL-2303HX to convert Serial Port 129
1.8.7 Pin Descriptions of STC15W4K32S4 series MCU 130
1.9 General Overview of STC15F408AD series MCU 137
1.9.1 Introduction of STC15F408AD series MCU (In abundant supply) 137
1.9.2 Block diagram of STC15F408AD series 140
1.9.3 Pin Configurations of STC15F408AD series MCU 141
1.9.4 STC15F408AD series Selection and Price Table 144
1.9.5 Naming rules of STC15F412AD series MCU 145
1.9.6 Application Circuit Diagram for ISP of STC15F408AD series MCU 146
1.9.6.1 Application Circuit Diagram for ISP using RS-232 Converter 146
1.9.6.2 Application Circuit Diagram for ISP using USB Chip PL-2303SA to convert Serial Port 147
1.9.6.3 Application Circuit Diagram for ISP using USB Chip PL-2303HXD / PL-2303HX to convert Serial Port 148
1.9.6.4 Application Circuit Diagram for ISP directly using USB port 149
——P3.0/P3.1 of STC15W4K series and IAP15W4K58S4 connect directly with D-/D+ of USB 149
1.9.7 Pin Descriptions of STC15F408AD series MCU 150
1.10 Package Dimension Drawings of STC15 series MCU 153
1.10.1 Dimension Drawings of DFN8 153
1.10.2 Dimension Drawings of SOP8 154
1.10.3 Dimension Drawings of DIP8 155

1.10.4 Dimension Drawings of SOP16 156
1.10.5 Dimension Drawings of DIP16 157
1.10.6 Dimension Drawings of SOP20 158
1.10.7 Dimension Drawings of TSSOP20 159
1.10.8 Dimension Drawings of LSSOP20 160
1.10.9 Dimension Drawings of DIP20 161
1.10.10 Dimension Drawings of SOP28 162
1.10.11 Dimension Drawings of TSSOP28 163
1.10.12 Dimension Drawings of SKDIP28 164
1.10.13 Dimension Drawings of QFN28 165
1.10.14 Dimension Drawings of LQFP32 166
1.10.15 Dimension Drawings of SOP32 167
1.10.16 Dimension Drawings of QFN32 168
1.10.17 Dimension Drawings of PDIP40 169
1.10.18 Dimension Drawings of LQFP44 170
1.10.19 Dimension Drawings of PLCC44 171
1.10.20 Dimension Drawings of PQFP44 172
1.10.21 Dimension Drawings of LQFP48 173
1.10.22 Dimension Drawings of QFN48 174
1.10.23 Dimension Drawings of LQFP64S 175
1.10.24 Dimension Drawings of LQFP64L 176
1.10.25 Dimension Drawings of QFN64 177
1.11 Special Peripheral Function(CCP/SPI,UART1/2/3/4) Switch 178
1.11.1 Test Porgram that Switch CCP/PWM/PCA (C and ASM) 180
1.11.2 Test Porgram that Switch PWM2/3/4/5/PWMFLT (C and ASM) 182
1.11.3 Test Porgram that Switch PWM6/PWM7 (C and ASM) 184
1.11.4 Test Porgram that Switch SPI (C and ASM) 186
1.11.5 Test Porgram that Switch UART1 (C and ASM) 188
1.11.6 Test Porgram that Switch UART2 (C and ASM) 190
1.11.7 Test Porgram that Switch UART3 (C and ASM) 192
1.11.8 Test Porgram that Switch UART4 (C and ASM) 194
1.12 Global Unique Identification Number (ID) 196
Chapter 2 Clock, Reset and Power Management 202
2.1 Clock 202
2.1.1 On-Chip Configurable Clock 202
2.1.2 Divider for System Clock 203
2.1.3 Programmable Clock Output (or as Frequency Divider) 205

2.1.3.1 Special Function Registers Related to Programmable Clock Output 206
2.1.3.2 Master Clock Output and Demo Program(C and ASM) 211
2.1.3.3 Timer 0 Programmable Clock Output and Demo Program(C and ASM) 214
2.1.3.4 Timer 1 Programmable Clock Output and Demo Program(C and ASM) 218
2.1.3.5 Timer 2 Programmable Clock Output and Demo Program (C and ASM) 222
2.1.3.6 Timer 3 Programmable Clock Output and Demo Program (C and ASM) 226
2.1.3.7 Timer 4 Programmable Clock Output and Demo Program (C and ASM) 227
2.2 RESET Sources 228
2.2.1 External RST pin Reset 228
2.2.2 Software Reset and Demo Program (C and ASM) 229
2.2.3 Power-Off / Power-On Reset (POR) 232
2.2.4 MAX810 Speical Circuit Reset (Power-Off/ Power-On Reset Delay) 232
2.2.5 Internal Low Voltage Detection Reset 233
2.2.6 Watch-Dog-Timer Reset 237
2.2.7 Reset Caused by Illegal use of Program Address 241
2.2.8 Warm Boot and Cold Boot Reset 242
2.3 Power Management Modes 243
2.3.1 Slow Down Mode and Demo Program (C and ASM) 245
2.3.2 Idle Mode and Demo Program (C and ASM) 248
2.2.3 Stop / Power Down (PD) Mode and Demo Program (C and ASM) 250
2.3.3.1 Demo Program Using Power-Down Wake-Up Timer to Wake Up Stop/PD Mode 252
2.3.3.2 Demo Program Using External Interrupt INT0 to Wake Up Stop/PD Mode 254
2.3.3.3 Demo Program Using External Interrupt INT1 to Wake Up Stop/PD Mode 256
2.3.3.4 Demo Program Using External Interrupt $\overline{\text{INT2}}$ to Wake Up Stop/PD Mode 258
2.3.3.5 Demo Program Using External Interrupt $\overline{\text{INT3}}$ to Wake Up Stop/PD Mode 260
2.3.3.6 Demo Program Using External Interrupt $\overline{\text{INT4}}$ to Wake Up Stop/PD Mode 262
2.3.3.7 Program Using External Interrupt Extended by CCP/PCA to Wake Up PD Mode 264
2.3.3.8 Program Using the Level Change of RxD pin to Wake Up Stop/PD Mode 269
2.3.3.9 Program Using the Level Change of RxD2 pin to Wake Up Stop/PD Mode 273
Chapter 3 Memory Organization and SFRs 277
3.1 Program Memory 277
3.2 Data Memory (SRAM) 279
3.2.1 On-chip Scratch-Pad RAM 279
3.2.2 On-Chip Expanded RAM / XRAM /AUX-RAM 281
3.2.3 External Expandable 64KB RAM (Off-Chip RAM) 287
3.2.4 Application Circuit Expanding 32K SRAM by Parallel Bus 290
3.3 Special Function Registers 291
3.3.1 Special Function Registers Address Map 291
3.3.2 Special Function Registers Bits Description 292
3.3.3 Dual Data Pointer Register (DPTR) 297

Chapter 4 Configurable I/O Ports of STC15 series MCU 298
4.1 I/O Ports Configurations 298
4.2 Special Explanation of P1.7/XTAL1 and P1.6/XTAL2 pin 300
4.3 Special Explanation of RST pin 301
4.4 Special Explanation of RSTOUT_LOW pin 301
4.5 Relay Boadcast Mode of UART1 302
4.6 External Resources that can wake up MCU from PD Mode 302
4.7 SFRs related to I/O ports and Its Address Statement 303
4.8 Demo Program of STC15 series P0/P1/P2/P3/P4/P5 306
4.9 I/O ports Modes 312
4.9.1 Quasi-bidirectional I/O 312
4.9.2 Push-pull Output 313
4.9.3 Input-only (High-Impedance)Mode 313
4.9.4 Open-drain Output 313
4.10 I/O port application notes 314
4.11 Typical transistor control circuit 314
4.12 Typical diode control circuit 314
4.13 3V/5V hybrid system 315
4.14 How to Make I/O Port Low after MCU Reset 316
4.15 I/O Status while PWM Outputing 316
4.16 Keyboard Scanning Circuit using I/O ports 317
4.17 Pin Function and Logic Turth Table of 74HC595 318
4.18 Circuit Expanding I/O ports using 74HC595 319
4.19 Circuit Driving 8-segment Digitron using 74HC595 320
4.20 Demo Program of Driving 8-Segment Digitron 321
—— Using common I/O ports to Control 74HC595 321
4.21 Application Circuit using I/O ports to Drive LED 328
4.22 Application Circuit using I/O to derectly Drive LCD 329
4.23 Application Circuit using A/D Conversion to Scan Key 330
4.24 Demo Program using I/O ports to Simulate I^2C Interface 331
4.24.1 Master Mode using I/O ports to Simulate I^2C Interface by Software 331
4.24.2 Slave Mode using I/O ports to Simulate I^2C Interface by Software 335
Chapter 5 Instruction System 338

5.1 Addressing Modes....338
5.1.1 Immediate Addressing....338
5.1.2 Direct Addressing....338
5.1.3 Indirect Addressing....338
5.1.4 Register Addressing....339
5.1.5 Inherent Addressing....339
5.1.6 Index Addressing....339
5.1.7 Bit Addressing....339
5.2 Instruction Set Summary....340
5.3 Instruction Definitions of Traditional 8051 MCU....346
Chapter 6 Interrupt System....383
6.1 Interrupt Request Sources of STC15 series MCU....384
6.1.1 Interrupt Request Sources of STC15F101W series....384
6.1.2 Interrupt Request Sources of STC15W10x series....384
6.1.3 Interrupt Request Sources of STC15W201S series....385
6.1.4 Interrupt Request Sources of STC15F408AD series....385
6.1.5 Interrupt Request Sources of STC15W401AS series....385
6.1.6 Interrupt Request Sources of STC15W404S series....385
6.1.6 Interrupt Request Sources of STC15W1K16S series....385
6.1.7 Interrupt Request Sources of STC15F2K60S2 series....386
6.1.8 Interrupt Request Sources of STC15W4K32S4 series....386
6.2 Interrupt Structure....387
6.3 Interrupt Vector Address/Priority/Request Flag Table....390
6.4 How to Declare Interrupt Function in Keil C....391
6.5 Interrupt Registers....392
6.6 Interrupt Priorities....402
6.7 Interrupt Handling....404
6.8 Interrupt Nesting....406
6.9 External Interrupts....406
6.10 Interrupt Demo Program (C and ASM)....407
6.10.1 External Interrupt 0 (INT0) Demo Program....407
6.10.1.1 External Interupt INT0 (rising + falling edge) Demo Program (C and ASM)....407
6.10.1.2 External Interrupt INT0 (falling edge) Demo Program (C and ASM)....409
6.10.2 External Interrupt 1(INT1) Demo Program....411
6.10.2.1 External Interrupt INT1 (rising + falling edge) Demo Program (C and ASM)....411
6.10.2.2 External Interrupt INT1 (falling edge) Demo Program (C and ASM)....413

STC MCU Limited

6.10.3 External Interrupt 2 (INT2) (falling) Demo Program (C and ASM) 415
6.10.4 External Interrupt 3 (INT3) (falling) Demo Program (C and ASM) 417
6.10.5 External Interrupt 4 (INT4) (falling) Demo Program (C and ASM) 419
6.10.6 Demo Program using T0 to expand External Interrupt (Falling) 421
—— T0 as Counter (C and ASM) 421
6.10.7 Demo Program using T1 to expand External Interrupt (Falling) 423
—— T1 as Counter (C and ASM) 423
6.10.8 Demo Program using T2 to expand External Interrupt (Falling) 425
—— T2 as Counter (C and ASM) 425
6.10.9 Demo Program using CCP/PCA to expand External Interrupt 428
Chapter 7 Timer/Counter 432
7.1 Special Function Registers about Timer/Counter 433
7.2 Timer/Counter 0 Modes 442
7.2.1 Mode 0 (16-Bit Auto-Relaod Timer/Counter) and Demo Program 442
7.2.1.1 Demo Program of 16-bit Auto-Reload Timer/Counter 0 (C and ASM) 443
7.2.1.2 Demo Program of T0 Programmable Clock Output (C and ASM) 446
—— T0 as 16-bit Auto-Reload Timer/Counter 446
7.2.1.3 Demo Program using 16-bit auto-reload Timer 0 to Simulate 10 or 16 bits PWM 449
7.2.1.4 Demo Program using T0 to expand External Interrupt (Falling edge) 452
—— T0 as 16-bit Auto-Relaod Counter (C and ASM) 452
7.2.2 Mode 1 (16-bit Timer/Counter) and Demo Program (C and ASM) 454
7.2.3 Mode 2 (8-bit Auto-Reload Timer/Counter) and Demo Program 458
7.2.4 Mode 3 (16-bit Auto-Relaod Timer/Couter whose Interrupt can not be disabled) 461
7.3 Timer/Counter 1 Modes 462
7.3.1 Mode 0 (16-Bit Auto-Relaod Timer/Counter) and Demo Program 462
7.3.1.1 Demo Program of 16-bit Auto-Reload Timer/Counter 1 (C and ASM) 463
7.3.1.2 Demo Program of T1 Programmable Clock Output (C and ASM) 466
—— T1 as 16-bit Auto-Reload Timer/Counter 466
7.3.1.3 Demo Program using 16-bit auto-reload Timer 1 as UART1 baud-rate Generator 469
7.3.1.4 Demo Program using T1 to expand External Interrupt (Falling edge) 475
—— T1 as 16-bit Auto-Relaod Counter (C and ASM) 475
7.3.2 Mode 1 (16-bit Timer/Counter) and Demo Programs (C and ASM) 477
7.3.3 Mode 2 (8-bit Auto-Reload Timer/Counter) and Demo Program 481
7.3.3.1 Demo Program using 8-bit auto-reload Timer 1 as UART1 baud-rate Generator 482
7.3.3.2 Demo Program using T1 to expand External Interrupt (Falling edge) 487
—— T1 as 8-bit Auto-Relaod Counter (C and ASM) 487
7.4 Timer/Counter 2 489
7.4.1 Special Function Registers about Timer/Counter 2 489
7.4.2 Timer/Counter 2 as 16-Bit Auto-Reload Timer/Counter 493

STC MCU Limited

7.4.2.1 Demo Program of 16-bit Auto-Reload Timer/Counter 2 (C and ASM)....494
7.4.2.2 Demo Program using T2 to expand External Interrupt (Falling edge)....497
—— T2 as 16-bit Auto-Relaod Counter (C and ASM)....497
7.4.3 Timer/Counter 2 Programmable Clock Output and Demo Program....500
7.4.4 Timer/Counter 2 as Baud-Rate Generator of Serial Port (UART)....504
7.4.4.1 Demo Program using Timer/Counter 2 as UART1 Baud-Rate Generator....505
7.4.4.2 Demo Program using Timer/Counter 2 as UART2 Baud-Rate Generator....511
7.5 Timer/Counter 3 and Timer/Counter 4....517
7.5.1 Special Function Registers about Timer/Counter 3 and 4....517
7.5.2 Timer/Counter 3....519
7.5.2.1 Timer/Counter 3 as 16-Bit Auto-Reload Timer/Counter....519
7.5.2.2 Timer/Counter 3 Programmable Clock Output....520
7.5.2.3 Timer/Counter 3 as Baud-Rate Generator of Serial Port 3 (UART3)....521
7.5.3 Timer/Counter 4....522
7.5.3.1 Timer/Counter 4 as 16-Bit Auto-Reload Timer/Counter....522
7.5.3.2 Timer/Counter 4 Programmable Clock Output....523
7.5.3.3 Timer/Counter 4 as Baud-Rate Generator of Serial Port 4 (UART4)....524
7.6 How to Increase T0/T1/T2/T3/T4 Speed by 12 times....525
7.7 Programmable Clock Output (or as Frequency Divider)....527
7.7.1 Special Function Registers Related to Programmable Clock Output....528
7.7.2 Master Clock Output and Demo Program(C and ASM)....533
7.7.3 Timer 0 Programmable Clock Output and Demo Program....536
7.7.4 Timer 1 Programmable Clock Output and Demo Program....540
7.7.5 Timer 2 Programmable Clock Output and Demo Program....544
7.7.6 Timer 3 Programmable Clock Output and Demo Program....548
7.7.7 Timer 4 Programmable Clock Output and Demo Program....549
7.8 Power-Down Wake-Up Special Timer and Demo Program....550
7.9 Application Notes for Timer in practice....555
Chapter 8 Serial Port (UART) Communication....556
8.1 Special Function Registers about Serial Port 1 (UART1)....557
8.2 UART1 Operation Modes....563
8.2.1 Mode 0 : 8-Bit Shift Register....563
8.2.2 Mode 1: 8-Bit UART with Variable Baud Rate....565
8.2.3 Mode 2: 9-Bit UART with Fixed Baud Rate....568
8.2.4 Mode 3: 9-Bit UART with Variable Baud Rate....570
8.3 Buad Rates Setting of UART1 and Demo Program....572
8.4 Demo Program of UART1 (C and ASM)....574
8.4.1 Demo Program using T2 as UART1 Baud-Rate Generator (C&ASM)....574

8.4.2 Demo Program using T1 as UART1 Baud-Rate Generator(C&ASM) 580
—— T1 in Mode 0 (16-bit Auto-Reload Timer/Counter) 580
8.4.3 Demo Program using T1 as UART1 Baud-Rate Generator(C&ASM) 586
—— T1 in Mode 2 (8-bit Auto-Reload Timer/Counter) 586
8.5 Frame Error Detection 592
8.6 Multiprocessor Communications 592
8.7 Automatic Address Recognition of UART1 593
8.7.1 Special Fucntion Registers about Automatic Address Recognition 593
8.7.2 Instruction of Automatic Address Recognition 595
8.7.3 Demo Program of Automatic Address Recognition (C and ASM).....598
8.8 Relay Boadcast Mode of UART1 604
8.9 Special Function Registers about Serial Port 2 (UART2) 605
8.10 UART2 Operation Modes 608
8.10.1 Mode 0 : 8-bit UART2 with Variable Baud-Rate 608
8.10.2 Mode 3: 9-bit UART2 with Variable Baud-Rate 608
8.11 Demo Program of UART2 (C and ASM).....609
----- Using Timer 2 as UART2 Baud-Rate Generator.....609
8.12 Special Function Registers about Serial Port 3 (UART3) 615
8.13 UART3 Operation Modes 619
8.13.1 Mode 0 : 8-bit UART3 with Variable Baud-Rate 619
8.13.2 Mode 3: 9-bit UART3 with Variable Baud-Rate 620
8.14 Special Function Registers about Serial Port 4 (UART4) 621
8.15 UART4 Operation Modes 625
8.15.1 Mode 0 : 8-bit UART4 with Variable Baud-Rate 625
8.15.2 Mode 3: 9-bit UART4 with Variable Baud-Rate 626
Chapter 9 IAP/EEPROM Function of STC15 Series 627
9.1 IAP / EEPROM Special Function Registers 628
9.2 STC15 Series Internal EEPROM Allocation Table 632
9.2.1 STC15W4K32S4 Series Internal EEPROM Allocation Table 632
9.2.2 STC15F2K60S2 Series Internal EEPROM Allocation Table.....633
9.2.3 STC15W1K16S Series Internal EEPROM Allocation Table 634
9.2.4 STC15W404S Series Internal EEPROM Allocation Table 634
9.2.4 STC15W401AS Series Internal EEPROM Allocation Table 635
9.2.5 STC15F408AD Series Internal EEPROM Allocation Table 635
9.2.6 STC15W201S Series Internal EEPROM Allocation Table 636

9.2.7 STC15W10x Series Internal EEPROM Allocation Table 636
9.2.8 STC15F101W Series Internal EEPROM Allocation Table 637
9.3 IAP/EEPROM Assembly Program Introduction 640
9.4 EEPROM Demo Program (C and ASM) 643
9.4.1 EEPROM Demo Program (not Transmit data by UART) 643
9.4.2 EEPROM Demo Program (Transmit data by UART) (C and ASM).....651
Chapter 10 Analog to Digital Converter 661
10.1 A/D Converter Structure 661
10.2 Registers for ADC.....663
10.3 ADC Typical Application Circuit.....667
10.4 Application Circuit using A/D Conversion to Scan Key 668
10.5 ADC Reference Voltage Source.....669
10.6 ADC Demo Program (C and ASM) 670
10.6.1 Demo Program (Demonstrate in ADC Interrupt Mode).....670
10.6.2 Demo Program (Demonstrate in Polling Mode) 676
10.7 Circuit Diagram using SPI to Extend 12-bit ADC(TLC2543).....684
Chapter 11 Application of CCP/PCA/PWM/DAC 685
11.1 Special Function Registers related with CCP/PCA/PWM.....686
11.2 CCP/PCA/PWM Structure.....694
11.3 CCP/PCA Modules Operation Mode 696
11.3.1 CCP/PCA Capture Mode 697
11.3.2 16-bit Software Timer Mode.....698
11.3.3 High Speed Output Mode 699
11.3.4 Pulse Width Modulator Mode (PWM mode).....700
11.3.4.1 8-bit Pulse Width Modulator (PWM mode).....700
11.3.4.2 7-bit Pulse Width Modulator (PWM mode).....701
11.3.4.3 6-bit Pulse Width Modulator (PWM mode).....703
11.4 Program using CCP/PCA to Extend External Interrupt.....705
11.5 Demo Program for CCP/PCA acted as 16-bit Timer 709
11.6 Demo Program using CCP/PCA to output High Speed Pulse 714
11.7 Demo Program for CCP/PCA Outputing PWM (6+7+8 bit).....719
11.8 Program achieving 9~16 bit PWM Output by CCP/PCA.....724
11.9 Demo Program of CCP/PCA 16-bit Capture Mode.....728
11.10 Demo Program using T0 to Simulate 10 or 16 bits PWM.....735
——T0 as 16-bit Auto-Reload Timer/Counter 735

11.11 Circuit Diagram using CCP/PCA to achieve 8~16 bit DAC 738
Chapter 12 New 6 Channels of PWM of STC15W4K series 739
——High-Precision PWM with Death Time Control.....739
12.1 Special Function Registers of New PWM Generators.....740
12.2 Interrupts of New Enhanced PWM Generators 748
Chapter 13 Comparator of STC15W series MCU 759
13.1 Comparator Demo Program using Interrupt(C and ASM).....762
13.2 Comparator Demo Program using Polling(C and ASM) 767
Chapter 14 Capacitive Sensing Touch Key.....771
—— Achieved by ADC of STC15 series 771
Chapter 15 Sysnchronous Serial Peripheral Interface 792
15.1 Special Function Registers related with SPI.....793
15.2 SPI Structure 797
15.3 SPI Data Communication 798
15.3.1 SPI Data Communication Modes 799
15.3.2 SPI Configuration.....801
15.3.3 Additional Considerations for a Slave 802
15.3.4 Additional Considerations for a Master 802
15.3.5 Mode Change on $\overline{\mathbf{SS}}$-pin 802
SS.....802
15.3.6 Write Collision 803
15.3.7 SPI Clock Rate Select 803
15.3.8 SPI Data Mode.....804
15.4 SPI Function Demo Program(Single Master—Single Slave).....806
15.4.1 SPI Function Demo Program using Interrupt(C and ASM) 806
15.4.2 SPI Function Demo Programs using Polling mode (C and ASM) 812
15.5 SPI Function Demo Program(Each other as Master-Slave).....818
15.5.1 SPI Function Demo Programs using Interrupts (C and ASM) 818
15.5.2 SPI Function Demo Programs using Polling.....824
15.6 SPI Demo (Single Master Multiple Slave) 830
15.7 Circuit Digram of Extending 12-bit ADC(TLC2543) by SPI 840
Chapter 16 Compiler / ISP Programmer / Emulator.....841
16.1 Compiler/Assembler and Head File.....841

16.2 USB Download Tool On-Line / Off-Line —— U8/U8-Mini 849
16.2.1 Introduce the Main Modules of U8 (RMB 100 yuan) 851
16.2.2 Install the Driver of U8 Tool.....852
16.3 ISP Programmer / Burner.....854
16.3.1 In-System-Programming (ISP) principle.....854
16.3.2 Application Circuit Diagram for ISP of STC15 series MCU 855
16.3.2.1 Application Circuit Diagram for ISP using RS-232 Converter.....855
16.3.2.2 Application Circuit Diagram for ISP using USB Chip PL-2303SA to convert Serial Port 857
16.3.2.3 Application Circuit Diagram for ISP using USB Chip PL-2303HXD / PL-2303HX to convert Serial Port ..858
16.3.3 Package Real Diagram of STC MCU 859
16.3.4 Hardware of STC-ISP Programming Tools 862
16.3.4.1 Real Show of STC-ISP Program Board.....862
16.3.4.2 How to Utilize Transition Socket to install SMD onto STC-ISP Program Board 864
16.3.5 PC Side Control Software Usage.....869
16.3.6 How to Release Project.....878
16.3.7 How to Encrypt User Code by Software STC15-ISP-Ver6.82 882
16.3.8 Self-Defined Download and Demo Program.....883
16.4 Emulator of STC15 series MCU.....886
Chapter 17 How to Program Slave Chip by Master Chip.....892
——the Slave Chip is only for STC15 series MCU 892
Appendix A: Assembly Language Programming 903
Appendix B: 8051 C Programming 925
Appendix C: STC15 series Electrical Characteristic 935
Appendix D: Indirect addressing inner 256B RAM 936
Appendix E: Using Serial port to Expand I/O Ports 937
Appendix F: LED Driven by an I/O port and Key Scan.....939
Appendix G: Notes of STC15 replacing Standard 8051.....940
Appendix H: Instruction Speed Boost Summary.....943
Appendix I: How to reduce the Code Length by Keil C.....949
Appendix J: Circuit Diagram of STC15 Demo Board.....950

Chapter 1. General Overview of the whole STC15 series

1.1 General Overview of STC15F2K60S2 series MCU

1.1.1 Introduction of STC15F2K60S2 series MCU (In abundant supply)

STC15F2K60S2 series MCU is a single-chip microcontroller based on a high performance 1T architecture 8051 CPU, which is produced by STC MCU Limited. It is a new generation of 8051 MCU of high speed, high stability, low power consumption and super strong anti-disturbance. Besides, STC15F2K60S2 series MCU is a MCU of super advanced encryption, because it adopts the eighth generation of STC encryption technology. With the enhanced kernel, STC15F2K60S2 series MCU is faster than a traditional 8051 in executing instructions (about 8~12 times the rate of a traditional 8051 MCU), and has a fully compatible instruction set with traditional 8051 series microcontroller. External expensive crystal can be removed by being integrated internal high-precise R/C clock(±0.3%) with ±1% temperature drift (-40℃~+85℃) while ±0.6% in normal temperature (-20℃~+65℃) and wide frenquency adjustable between 5MHz and 35MHz. External reset curcuit also can be removed by being integrated internal highly reliable one with 8 levels optional threshold voltage of reset. The STC15F2K60S2 series MCU retains all features of the traditional 8051. In addition, it has 3-channels CCP/PCA/PWM, 8-channels and 10-bits A/D Converter(300 thousand times per sec.), large capacity of 2K bytes SRAM, two high-speed asynchronous serial ports----UARTs(UART1/UART2, can be regarded as 5 serial ports by shifting among 5 groups of pins) and a high-speed synchronous serial peripheral interface----SPI. STC15F2K60S2 series MCU is usually used in communications which need for serveral UARTs or electrical control or some occasion with strong disturbance.

In Keil C development environment, select the Intel 8052 to compiling and only contain < reg51.h > as header file.

STC15 series MCU with super high-speed CPU core of STC-Y5 works 20% faster than STC early 1T series (such as STC12/STC11/STC10 series) at same clock frequency.

- Enhanced 8051 Central Processing Unit, 1T, single clock per machine cycle, faster 8~12 times than the rate of a traditional 8051.
- Operating voltage range:
  STC15F2K60S2 series: 5.5V ~ 4.2V (5V MCU).
  STC15L2K60S2 series: 3.6V ~ 2.4V (3V MCU).
- On-chip 8/16/24/32/40/48/56/60/61/63.5K FLASH program memory with flexible ISP/IAP capability, can be repeatedly erased more than 100 thousand times.
- Large capacity of on-chip 2048 bytes SRAM: 256 byte scratch-pad RAM and 1792 bytes of auxiliary RAM
- Be capable of addressing up to 64K byte of external RAM
- On-chip EEPROM with large capacity can be repeatedly erased more than 100 thousand times.
- Dual Data Pointer (DPTR) to speed up data movement
- ISP/IAP, In-System-Programming and In-Application-Programming , no need for programmer and emulator.
- 8 channels and 10 bits Analog-to-Digital Converter (ADC), the speed up to 300 thousand times per second, 3 channels PWM also can be used as 3 channels D/A Converter(DAC).
- 3 channels Capture/Compare uints(CCP/PCA/PWM)
  ---- can be used as 3 Times or 3 external Interrupts(can be generated on rising or falling edge) or 3 channels D/A Converter.

STC MCU Limited.

- The high-speed pulse function of CCP/PCA can be utilized to to realize 3 channels 9 ~ 16 bit PWM (each channel of which takes less than 0.6% system time)
- The clock output function of T0, T1 or T2 can be utilized to realize 8 ~ 16 bit PWM with a high degree of accuracy (which takes less than 0.4% system time)
- Internal hghly reliable Reset with 8 levels optional threshold voltage of reset, external reset curcuit can be completely removed
- Internal high- precise R/C clock(±0.3%) with ±1% temperature drift (-40℃~+85℃) while ±0.6% (-20℃ ~+65℃) in normal temperature and wide frenquency adjustable between 5MHz and 35MHz (5.5296MHz / 11.0592MHz / 22.1184MHz / 33.1776MHz).
- No need external crystal and reset, and can output clock and low reset signal from MCU.
- Operating frequency range: 0- 28MHz, is equivalent to traditional 8051:0~336MHz.
- Two high-speed asynchronous serial ports----UARTs (UART1/UART2 can be used simultaneously and regarded as 5 serial ports by shifting among 5 groups of pins):
  UART1(RxD/P3.0, TxD/P3.1) can be switched to (RxD_2/P3.6, TxD_2/P3.7),
  also can be switched to (RxD_3/P1.6, TxD_3/P1.7);
  UART2(RxD2/P1.0, TxD2/P1.1) can be switched to (RxD2_2/P4.6, TxD2_2/P4.7).
- A high-speed synchronous serial peripheral interface----SPI.
- Support the function of Encryption Download (to protect your code from being intercepted).
- Support the function of RS485 Control
- Code protection for flash memory access, excellent noise immunity, very low power consumption
- Power management mode: Slow-Down mode, Idle mode(all interrupt can wake up Idle mode), Stop/Power-Down mode.
- Timers which can wake up stop/power-down mode: have internal low-power special wake-up Timer.
- Resource which can wake up stop/power-down mode are: INT0/P3.2, INT1/P3.3 (INT0/INT1, may be generated on both rising and falling edges), $\overline{\text{INT2}}$/P3.6, $\overline{\text{INT3}}$/P3.7, $\overline{\text{INT4}}$/P3.0 ($\overline{\text{INT2}}$ /$\overline{\text{INT3}}$/$\overline{\text{INT4}}$, only be generated on falling edge); pins CCP0/CCP1/CCP2; pins T0/T1/T2(their falling edge can wake up if T0/T1/T2 have been enabled before power-down mode, but no interrupts can be generatetd); internal low-power special wake-up Timer.
- six Timers/Counters, threee 16-bit reloadable Timer/Counter(T0/T1/T2, T0 and T1 are compatible with Timer0/Timer1 of traditional 8051), T0/T1/T2 all can independently achieve external programmable clock output (3 channels), 3 channels CCP/PWM/PCA also can be used as three timers.
- Programmable clock output function(output by dividing the frequency of the internal system clock or the input clock of external pin):
  The speed of external programmable clock output of 5V MCU is also not more than 13.5MHz, because the output speed of I/O port of STC15 series 5V MCU is not more than 13.5MHz.
  The speed of external programmable clock output of 3.3V MCU is also not more than 8MHz, because the output speed of I/O port of STC15 series 3.3V MCU is not more than 8MHz.

STC MCU Limited.

① The Programmable clock output of T0 is on P3.5/T0CLKO (output by dividing the frequency of the internal system clock or the input clock of external pin T0/P3.4)

② The Programmable clock output of T1 is on P3.4/T1CLKO (output by dividing the frequency of the internal system clock or the input clock of external pin T1/P3.5)

③ The Programmable clock output of T2 is on P3.0/T2CLKO (output by dividing the frequency of the internal system clock or the input clock of external pin T2/P3.1)

Three timers/counters in above all can be output by dividing the frequency from 1 to 65536.

④ The Programmable clock output of master clock is on P5.4/MCLKO, and its frequency can be divided into MCLK/1, MCLK/2, MCLK/4.

The master clock can either be internal R/C clock or the external input clock or the external crystal oscillator.

MCLK is the frequency of master clock. MCLKO is the output of master clock.

It is on MCLKO/P3.4 that the Programmable clock output of master clock of STC15 series 8-pin MCU (such as STC15F101W series). However, it is on MCLKO/P5.4 that the Programmable clock output of master clock of other STC15 series MCU including 16-pin or more than 16-pin MCU(such as STC15F2K60S2, STC15W4K32S4 and so on)

- One 15 bits Watch-Dog-Timer with 8-bit pre-scaler (one-time-enabled)
- advanced instruction set, which is fully compatible with traditional 8051 MCU, have hardware multiplication / division command.
- 42/38/30/26 common I/O ports are available, their mode is quasi_bidirectional/weak pull-up (traditional 8051 I/O ports mode) after reset, and can be set to four modes: quasi_bidirectional/weak pull-up, strong push-pull/ strong pull-up, input-only/high-impedance and open drain.
- the driving ability of each I/O port can be up to 20mA, but it don't exceed this maximum 120mA that the current of the whole chip of 40-pin or more than 40-pin MCU, while 90mA that the current of the whole chip of 16-pin or more than 16-pin MCU or 32-pin or less than 32-pin MCU.
- If I/O ports are not enough, it can be extended by connecting a 74HC595(reference price: RMB 0.15 yuan). Besides, cascading several chips also can extend to dozens of I/O ports.
- Package: LQFP44 (12mm x 12mm), LQFP-32 (9mm x 9mm), TSSOP20(6.5mm x 6.5mm), SOP28, SKDIP28, PDIP-40.
- All products are baked 8 hours in high-temperature 175℃ after be packaged, Manufacture guarantee good quality.
- In Keil C development environment, select the Intel 8052 to compiling and only contain < reg51.h > as header file.

STC MCU Limited.

1.1.2 Block diagram of STC15F2K60S2 series

The internal structure of STC15F2K60S2 series MCU is shown in the block diagram below. STC15F2K60S2 series MCU includes central processor unit(CPU), program memory (Flash), data memory(SRAM), Timers/ Counters, I/O ports, high-speed A/D converter(ADC), watchdog, high-speed asynchronous serial communication ports---UART(UART1/UART2), CCP/PWM/PCA, a group of high-speed synchronous serial peripheral interface (SPI), internal high- precise R/C clock, internal hghly reliable Reset and so on. STC15F2K60S2 series MCU almost includes all of the modules required in data acquisition and control, and can be regarded as an on-chip system (SysTem Chip or SysTem on Chip, abbreviated as STC, this is the name origin of Hongjing technology STC Limited).

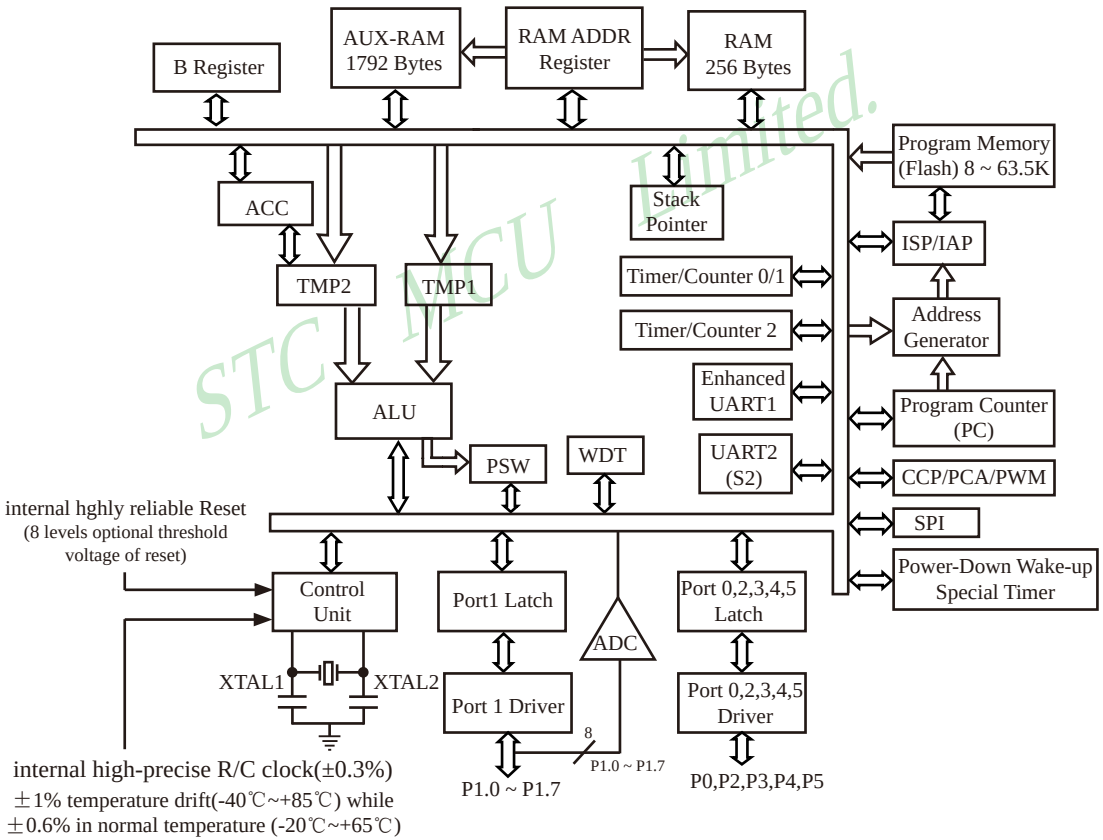

STC15F2K60S2 series Block Diagram

1.1.3 Pin Configurations of STC15F2K60S2 series MCU

All packages meet EU RoHS standards

CCP is abbreviation for Capture, Compare, PWM

Note：P0 ports can be multiplexed as Address/Data bus，not as A/D Converter. 8 channels of A/D Converter are on P1.

Consequently：P0.x/ADx means that P0.x can be used as Address/Data bus, while P1.x/ADCx means P1.x can be used as A/D conversion channel in the pin map.

LQFP44(12x12mm)

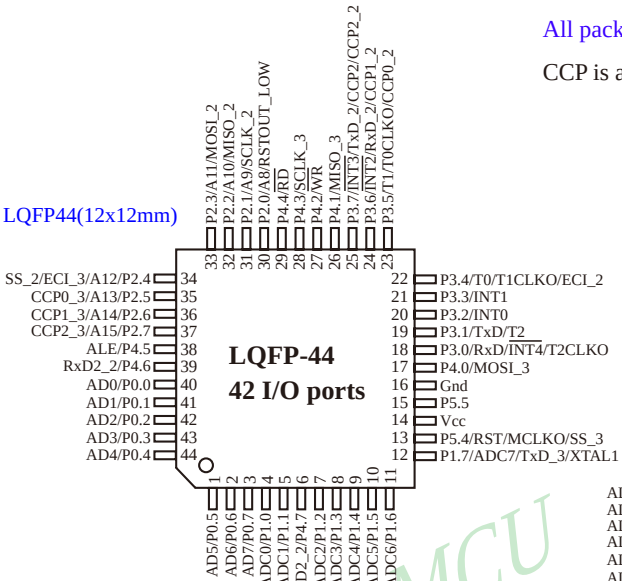

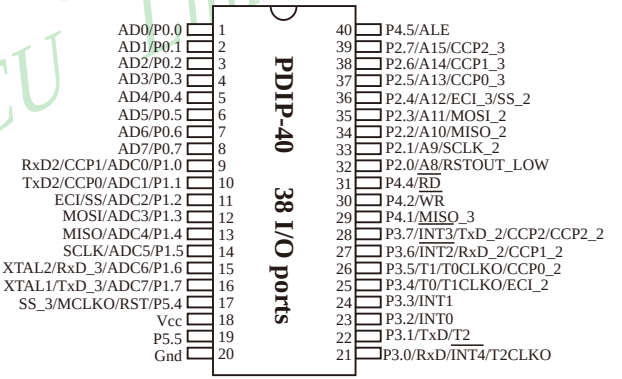

The speed of external programmable clock output of 5V MCU is also not more than 13.5MHz, because the output speed of I/O port of STC15 series 5V MCU is not more than 13.5MHz.

The speed of external programmable clock output of 3.3V MCU is also not more than 8MHz, because the output speed of I/O port of STC15 series 3.3V MCU is not more than 8MHz.

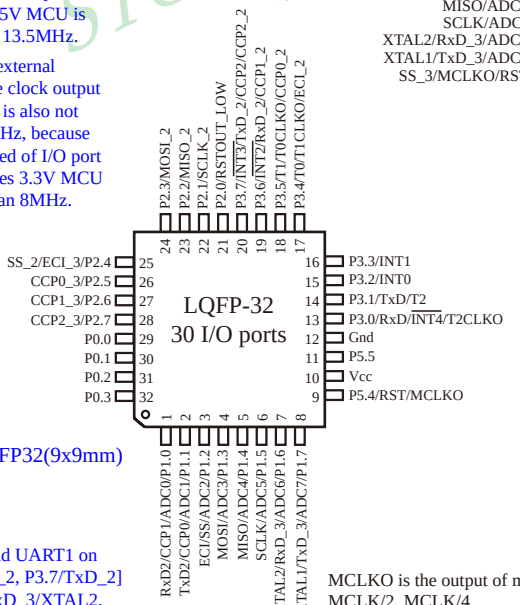

LQFP32(9x9mm)

T0CLKO refers to the programmable clock output of Timer/Counter 0
(output by dividing the frequency of the internal system clock or the input clock of external pin T0/P3.4);

T1CLKO refers to the programmable clock output of Timer/Counter 1
(output by dividing the frequency of the internal system clock or the input clock of external pin T1/P3.5);

T2CLKO refers to the programmable clock output of Timer/Counter 2
(output by dividing the frequency of the internal system clock or the input clock of external pin T2/P3.1);

In addition to programmable output on the internal system clock, T0CLKO/T1CLKO/T2CLKO also can be used as divider by dividing the frequency of the internal system clock or the input clock of external pin T0/T1/T2.

Recommend UART1 on [P3.6/RxD_2, P3.7/TxD_2] or [P1.6/RxD_3/XTAL2, P1.7/TxD_3/XTAL1]

MCLKO is the output of master clock whose frequency can be divided into MCLK/1, MCLK/2, MCLK/4
The master clock can either be internal R/C clock or the external input clock or the external crystal oscillator. MCLK is the frequency of master clock.

STC MCU Limited.

CCP is abbreviation for Capture, Compare, PWM

8 channels of A/D Converter are on P1. P1.x/ADCx means P1.x can be used as A/D conversion channel in the pin map.

The speed of external programmable clock output of 5V MCU is also not more than 13.5MHz, because the output speed of I/O port of STC15 series 5V MCU is not more than 13.5MHz.

The speed of external programmable clock output of 3.3V MCU is also not more than 8MHz, because the output speed of I/O port of STC15 series 3.3V MCU is not more than 8MHz.

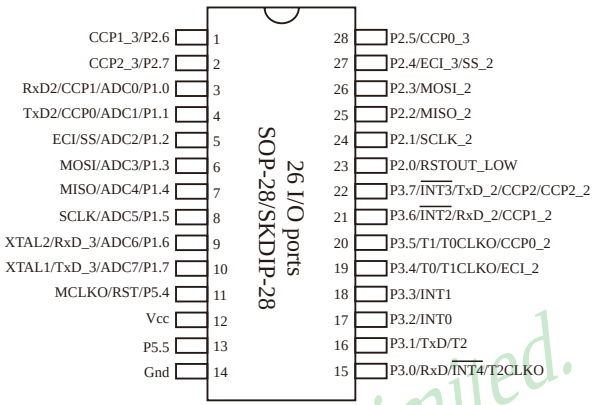

Recommend UART1 on [P3.6/RxD_2, P3.7/TxD_2] or [P1.6/RxD_3/XTAL2, P1.7/TxD_3/XTAL1]

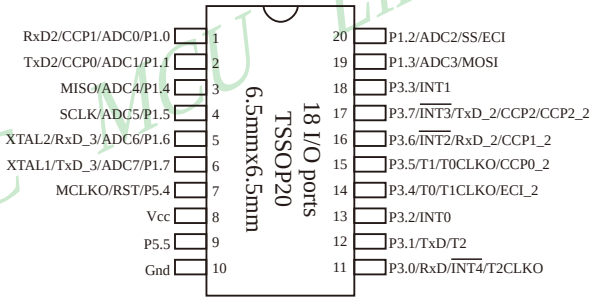

MCLKO is the output of master clock whose frequency can be divided into MCLK/**1, MCLK/2, MCLK/4**
The master clock can either be internal R/C clock or the external input clock or the external crystal oscillator. MCLK is the frequency of master clock.

T0CLKO refers to the programmable clock output of Timer/Counter 0
(output by dividing the frequency of the internal system clock or the input clock of external pin T0/P3.4);

T1CLKO refers to the programmable clock output of Timer/Counter 1
(output by dividing the frequency of the internal system clock or the input clock of external pin T1/P3.5);

T2CLKO refers to the programmable clock output of Timer/Counter 2
(output by dividing the frequency of the internal system clock or the input clock of external pin T2/P3.1);

In addition to programmable output on the internal system clock, T0CLKO/T1CLKO/T2CLKO also can be used as divider by dividing the frequency of the internal system clock or the input clock of external pin T0/T1/T2.

STC MCU Limited.

Mnemonic	Add	Name	7	6	5	4	3	2	1	0	Reset Value
AUXR1 P_SW1	A2H	Auxiliary register 1	S1_S1	S1_S0	CCP_S1	CCP_S0	SPI_S1	SPI_S0	0	DPS	0100,0000
P_SW2	BAH	Peripheral function switch register						S4_S	S3_S	S2_S	xxxx,xxx0
CLK_DIV (PCON2)	97H	Clock Division register	MCKO_S1	MCKO_S0	ADRJ	Tx_Rx	Tx2_Rx2	CLKS2	CLKS1	CLKS0	0000,x000

UART1/S1 can be switched in 3 groups of pins by selecting the control bits S1_S0 and S1_S1.		
S1_S1	S1_S0	UART1/S1 can be switched between P1 and P3
0	0	UART1/S1 on [P3.0/RxD,P3.1/TxD]
0	1	UART1/S1 on [P3.6/RxD_2,P3.7/TxD_2]
1	0	UART1/S1 on [P1.6/RxD_3/XTAL2,P1.7/TxD_3/XTAL1] when UART1 is on P1, please using internal R/C clock.
1	1	Invalid

Recommed UART1 on [P3.6/RxD_2,P3.7/TxD_2] or [P1.6/RxD_3/XTAL2,P1.7/TxD_3/XTAL1].

CCP can be switched in 3 groups of pins by selecting the control bits CCP_S1 and CCP_S0.		
CCP_S1	CCP_S0	CCP can be switched in P1 and P2 and P3
0	0	CCP on [P1.2/ECI,P1.1/CCP0,P1.0/CCP1,P3.7/CCP2]
0	1	CCP on [P3.4/ECI_2,P3.5/CCP0_2,P3.6/CCP1_2,P3.7/CCP2_2]
1	0	CCP on [P2.4/ECI_3,P2.5/CCP0_3,P2.6/CCP1_3,P2.7/CCP2_3]
1	1	Invalid

SPI can be switched in 3 groups of pins by selecting the control bits SPI_S1 and SPI_S0		
SPI_S1	SPI_S0	SPI can be switched in P1 and P2 and P4
0	0	SPI on [P1.2/SS,P1.3/MOSI,P1.4/MISO,P1.5/SCLK]
0	1	SPI on [P2.4/SS_2,P2.3/MOSI_2,P2.2/MISO_2,P2.1/SCLK_2]
1	0	SPI on [P5.4/SS_3,P4.0/MOSI_3,P4.1/MISO_3,P4.3/SCLK_3]
1	1	Invalid

UART2/S2 can be switched in 2 groups of pins by selecting the control bit S2_S.	
S2_S	UART2/S2 can be switched between P1 and P4
0	UART2/S2 on [P1.0/RxD2,P1.1/TxD2]
1	UART2/S2 on [P4.6/RxD2_2,P4.7/TxD2_2]

DPS：DPTR registers select bit.

0: DPTR0 is selected

1: DPTR1 is selected

STC MCU Limited.

Mnemonic	Add	Name	7	6	5	4	3	2	1	0	Reset Value
CLK_DIV (PCON2)	97H	Clock Division register	MCKO_S1	MCKO_S0	ADRJ	Tx_Rx	Tx2_Rx2	CLKS2	CLKS1	CLKS0	0000,x000

MCKO_S1	MCKO_S0	the control bit of master clock output by dividing the frequency (The master clock can either be internal R/C clock or the external input clock or the external crystal oscillator)
0	0	Master clock do not output external clock
0	1	Master clock output external clock，but its frequency do not be divided，and the output clock frequency = MCLK / 1
1	0	Master clock output external clock，but its frequency is divided by 2，and the output clock frequency = MCLK / 2
1	1	Master clock output external clock，but its frequency is divided by 4，and the output clock frequency = MCLK / 4

The master clock can either be internal R/C clock or the external input clock or the external crystal oscillator.
MCLK is the frequency of master clock.

STC15F2K60S2 series MCU output master clock on MCLKO/P5.4

It is on MCLKO/P3.4 that the Programmable clock output of master clock of STC15 series 8-pin MCU (such as STC15F101W series). However, it is on MCLKO/P5.4 that the Programmable clock output of master clock of other STC15 series MCU including 16-pin or more than 16-pin MCU.

ADRJ：the adjustment bit of ADC result

0：ADC_RES[7:0] store high 8-bit ADC result，ADC_RESL[1:0] store low 2-bit ADC result

1：ADC_RES[1:0] store high 2-bit ADC result，ADC_RESL[7:0] store low 8-bit ADC result

Tx_Rx：the set bit of relay and broadcast mode of UART1

0：UART1 works on normal mode

1：UART1 works on relay and broadcast mode，that to say output the input level state of RxD port to the outside TxD pin in real time, namely the external output of TxD pin can reflect the input level state of RxD port.

the RxD and TxD of UART1 can be switched in 3 groups of pins: [RxD/P3.0, TxD/P3.1];
[RxD_2/P3.6, TxD_2/P3.7];
[RxD_3/P1.6, TxD_3/P1.7].

Tx2_Rx2：the set bit of relay and broadcast mode of UART2，the function is reserved temporarily.
the RxD2 and TxD2 of UART2 can be switched in 2 groups of pins: [RxD2/P1.0, TxD2/P1.1];
[RxD2_2/P4.6, TxD2_2/P4.7].

CLKS2	CLKS1	CLKS0	the control bit of system clock (System clock refers to the master clock that has been divided frequency, which is offered to CPU, UARTs, SPI, Timers, CCP/PWM/PCA and A/D Converter)
0	0	0	Master clock frequency/1, No division
0	0	1	Master clock frequency/2
0	1	0	Master clock frequency/4
0	1	1	Master clock frequency/8
1	0	0	Master clock frequency/16
1	0	1	Master clock frequency/32
1	1	0	Master clock frequency/64
1	1	1	Master clock frequency/128

The master clock can either be internal R/C clock or the external input clock or the external crystal oscillator.

STC MCU Limited.

1.1.4 STC15F2K60S2 series Selection and Price Table

Type 1T 8051 MCU	Operating Voltage (V)	Flash (byte)	SRAM (byte)	UART	SPI	common Timers T0-T2	CCP PCA PWM	Speical Power-down Wake-up Timer	Standard External Interrupts	A/D 8-channel	DPTR	EEPROM	Internal Low-Voltage Detection Interrupt	WDT	Internal High-reliable Reset (with optional threshold voltage)	Internal High-Precise Clock	Output clock and reset signal from MCU	Encryption Download (to protect your code from being intercepted)	RS485 Control	All Packages LQFP44 PDIP40 LQFP32 SOP28 SKDIP28 TSSOP20 Price of a part of packages(RMB ¥) LQFP44	SOP28
STC15F2K60S2 series MCU Selection and Price Table Note: 3 channels CCP/PCA/PWM also can be used as 3 Timers.																					
STC15F2K08S2	5.5-4.2	8K	2K	2	Y	3	3-ch	Y	5	10-bit	2	53K	Y	Y	8-level	Y	Y	Y	Y	¥4.0	¥3.8
STC15F2K16S2	5.5-4.2	16K	2K	2	Y	3	3-ch	Y	5	10-bit	2	45K	Y	Y	8-level	Y	Y	Y	Y	¥4.2	¥4.0
STC15F2K24S2	5.5-4.2	24K	2K	2	Y	3	3-ch	Y	5	10-bit	2	37K	Y	Y	8-level	Y	Y	Y	Y	¥4.4	¥4.2
STC15F2K32S2	5.5-4.2	32K	2K	2	Y	3	3-ch	Y	5	10-bit	2	29K	Y	Y	8-level	Y	Y	Y	Y	¥4.5	¥4.3
STC15F2K40S2	5.5-4.2	40K	2K	2	Y	3	3-ch	Y	5	10-bit	2	22K	Y	Y	8-level	Y	Y	Y	Y	¥4.6	¥4.4
STC15F2K48S2	5.5-4.2	48K	2K	2	Y	3	3-ch	Y	5	10-bit	2	13K	Y	Y	8-level	Y	Y	Y	Y	¥4.6	¥4.4
STC15F2K56S2	5.5-4.2	56K	2K	2	Y	3	3-ch	Y	5	10-bit	2	5K	Y	Y	8-level	Y	Y	Y	Y	¥4.6	¥4.4
STC15F2K60S2	5.5-4.2	60K	2K	2	Y	3	3-ch	Y	5	10-bit	2	1K	Y	Y	8-level	Y	Y	Y	Y	¥4.6	¥4.4
IAP15F2K61S2 (which itself is a emluator)	5.5-4.2	61K	2K	2	Y	3	3-ch	Y	5	10-bit	2	IAP	Y	Y	8-level	Y	Y	Y	Y	¥4.6 The program Flash in user program area can be used as EEPROM.	¥4.4
IRC15F2K63S2 (Using external crystal or internal 24MHz clock)	5.5-4.2	63.5K	2K	2	Y	3	3-ch	Y	5	10-bit	2	IAP	Y	Y	Fixed	Y	Y	N	N	¥4.6 The program Flash in user program area can be used as EEPROM.	-
IAP15F2K61S	5.5-4.2	61K	2K	1	Y	3	N	Y	5	N	2	IAP	Y	Y	8-level	Y	Y	Y	Y	¥4.0 The program Flash in user program area can be used as EEPROM.	-
STC15F2K24AS	5.5-4.2	24K	2K	1	Y	3	3-ch	Y	5	10-bit	2	5K	Y	Y	8-level	Y	Y	Y	Y	¥3.3	-
STC15L2K60S2 series MCU Selection and Price Table																					
STC15L2K08S2	2.4-3.6	8K	2K	2	Y	3	3-ch	Y	5	10-bit	2	53K	Y	Y	8-level	Y	Y	Y	Y	¥4.0	¥3.8
STC15L2K16S2	2.4-3.6	16K	2K	2	Y	3	3-ch	Y	5	10-bit	2	45K	Y	Y	8-level	Y	Y	Y	Y	¥4.2	¥4.0
STC15L2K24S2	2.4-3.6	24K	2K	2	Y	3	3-ch	Y	5	10-bit	2	37K	Y	Y	8-level	Y	Y	Y	Y	¥4.4	¥4.2
STC15L2K32S2	2.4-3.6	32K	2K	2	Y	3	3-ch	Y	5	10-bit	2	29K	Y	Y	8-level	Y	Y	Y	Y	¥4.5	¥4.3
STC15L2K40S2	2.4-3.6	40K	2K	2	Y	3	3-ch	Y	5	10-bit	2	22K	Y	Y	8-level	Y	Y	Y	Y	¥4.6	¥4.4
STC15L2K48S2	2.4-3.6	48K	2K	2	Y	3	3-ch	Y	5	10-bit	2	13K	Y	Y	8-level	Y	Y	Y	Y	¥4.6	¥4.4
STC15L2K56S2	2.4-3.6	56K	2K	2	Y	3	3-ch	Y	5	10-bit	2	5K	Y	Y	8-level	Y	Y	Y	Y	¥4.6	¥4.4
STC15L2K60S2	2.4-3.6	60K	2K	2	Y	3	3-ch	Y	5	10-bit	2	1K	Y	Y	8-level	Y	Y	Y	Y	¥4.6	¥4.4
IAP15L2K61S2 (which itself is a emluator)	2.4-3.6	61K	2K	2	Y	3	3-ch	Y	5	10-bit	2	IAP	Y	Y	8-level	Y	Y	Y	Y	¥4.6 The program Flash in user program area can be used as EEPROM.	¥4.4
IAP15L2K61S	2.4-3.6	61K	2K	1	Y	3	N	Y	5	N	2	IAP	Y	Y	8-level	Y	Y	Y	Y	¥4.0 The program Flash in user program area can be used as EEPROM.	-

STC MCU Limited

Encryption Download : please burn source code with encryption key onto MCU in the factory. Then, you can make a simple update software just with one "update" button by fisrtly using the fuction "encrytion download" and then "release project" to update yourself code unabled to be intercepted when you need to upgrade your code.

To provide customized IC services

Because the last 7 bytes of the program area is stored mandatorily the contents of only global ID, the program space the user can actually use is 7 bytes smaller than the space shown in the selection table.

Conclusion: STC15F2K60S2 series MCU have: Three 16-bit relaodable Timers/Counters that are Timer/Counter 0, Timer/Counter 1 and Timer/Counter 2; 3 channels CCP/PWM/PCA (can achieve 3 timers or 3 D/A converters again); special power-down wake-up timer; 5 external interrupts INT0/INT1/$\overline{\text{INT2}}$/$\overline{\text{INT3}}$/$\overline{\text{INT4}}$; 2 high-speed asynchronous serial ports ---- UARTs (UART1/UART2 can be used simultaneously); a high-speed synchronous serial peripheral interface ---- SPI; 8 channels and 10 bits high-speed A/D converter; 2 data pointers ---- DPTR; external data bus and so on.

1.1.5 STC15F2K60S2 series Package and Price Table

Type 1T 8051 MCU	Operating Voltage (V)	Operating Frequency (MHz)	Operating Temprature (I — Industrial)	All Packages Price(RMB ¥) LQFP44 / PDIP40 LQFP32 SOP28 / SKDIP28 TSSOP20					
				LQFP44	PDIP40	LQFP32	SOP28	SKDIP28	TSSOP20
STC15F2K60S2 series MCU Package and Price Table									
STC15F2K08S2	5.5-4.2	28	-40℃ ~ +85℃	¥4.0	¥4.5	¥3.9	¥3.8	¥4.0	-
STC15F2K16S2	5.5-4.2	28	-40℃ ~ +85℃	¥4.2	¥4.7	¥4.1	¥4.0	¥4.2	-
STC15F2K24S2	5.5-4.2	28	-40℃ ~ +85℃	¥4.4	¥4.9	¥4.3	¥4.2	¥4.4	-
STC15F2K32S2	5.5-4.2	28	-40℃ ~ +85℃	¥4.5	¥4.9	¥4.4	¥4.3	¥4.5	-
STC15F2K40S2	5.5-4.2	28	-40℃ ~ +85℃	¥4.6	¥4.9	¥4.5	¥4.4	¥4.6	-
STC15F2K48S2	5.5-4.2	28	-40℃ ~ +85℃	¥4.6	¥4.9	¥4.5	¥4.4	¥4.6	-
STC15F2K56S2	5.5-4.2	28	-40℃ ~ +85℃	¥4.6	¥4.9	¥4.5	¥4.4	¥4.6	-
STC15F2K60S2	5.5-4.2	28	-40℃ ~ +85℃	¥4.6	¥4.9	¥4.5	¥4.4	¥4.6	-
IAP15F2K61S2 (which itself is a emluator)	5.5-4.2	28	-40℃ ~ +85℃	¥4.6	¥4.9	¥4.5	¥4.4	¥4.6	¥4.4
IRC15F2K63S2 (Using external crystal or internal 24MHz clock)	5.5-4.2	28	-40℃ ~ +85℃	¥4.6	¥4.9	-	-	-	-
IAP15F2K61S	5.5-4.2	28	-40℃ ~ +85℃	¥4.0	¥4.5	-	-	-	-
STC15F2K24AS	5.5-4.2	28	-40℃ ~ +85℃	¥3.3	-	-	-	-	-
STC15L2K60S2 series MCU Package and Price Table									
STC15L2K08S2	2.4-3.6	28	-40℃ ~ +85℃	¥4.0	-	¥3.9	¥3.8	-	-
STC15L2K16S2	2.4-3.6	28	-40℃ ~ +85℃	¥4.2	-	¥4.1	¥4.0	-	-
STC15L2K24S2	2.4-3.6	28	-40℃ ~ +85℃	¥4.4	-	¥4.3	¥4.2	-	-
STC15L2K32S2	2.4-3.6	28	-40℃ ~ +85℃	¥4.5	-	¥4.4	¥4.3	-	-
STC15L2K40S2	2.4-3.6	28	-40℃ ~ +85℃	¥4.6	-	¥4.5	¥4.4	-	-
STC15L2K48S2	2.4-3.6	28	-40℃ ~ +85℃	¥4.6	-	¥4.5	¥4.4	-	-
STC15L2K56S2	2.4-3.6	28	-40℃ ~ +85℃	¥4.6	-	¥4.5	¥4.4	-	-
STC15L2K60S2	2.4-3.6	28	-40℃ ~ +85℃	¥4.6	-	¥4.5	¥4.4	-	-
IAP15L2K61S2 (which itself is a emluator)	2.4-3.6	28	-40℃ ~ +85℃	¥4.6	¥4.9	¥4.5	¥4.4	¥4.6	-
IAP15L2K61S	2.4-3.6	28	-40℃ ~ +85℃	¥4.0	-	-	-	-	-

STC MCU Limited.

1.1.6 Naming rules of STC15F2K60S2 series MCU

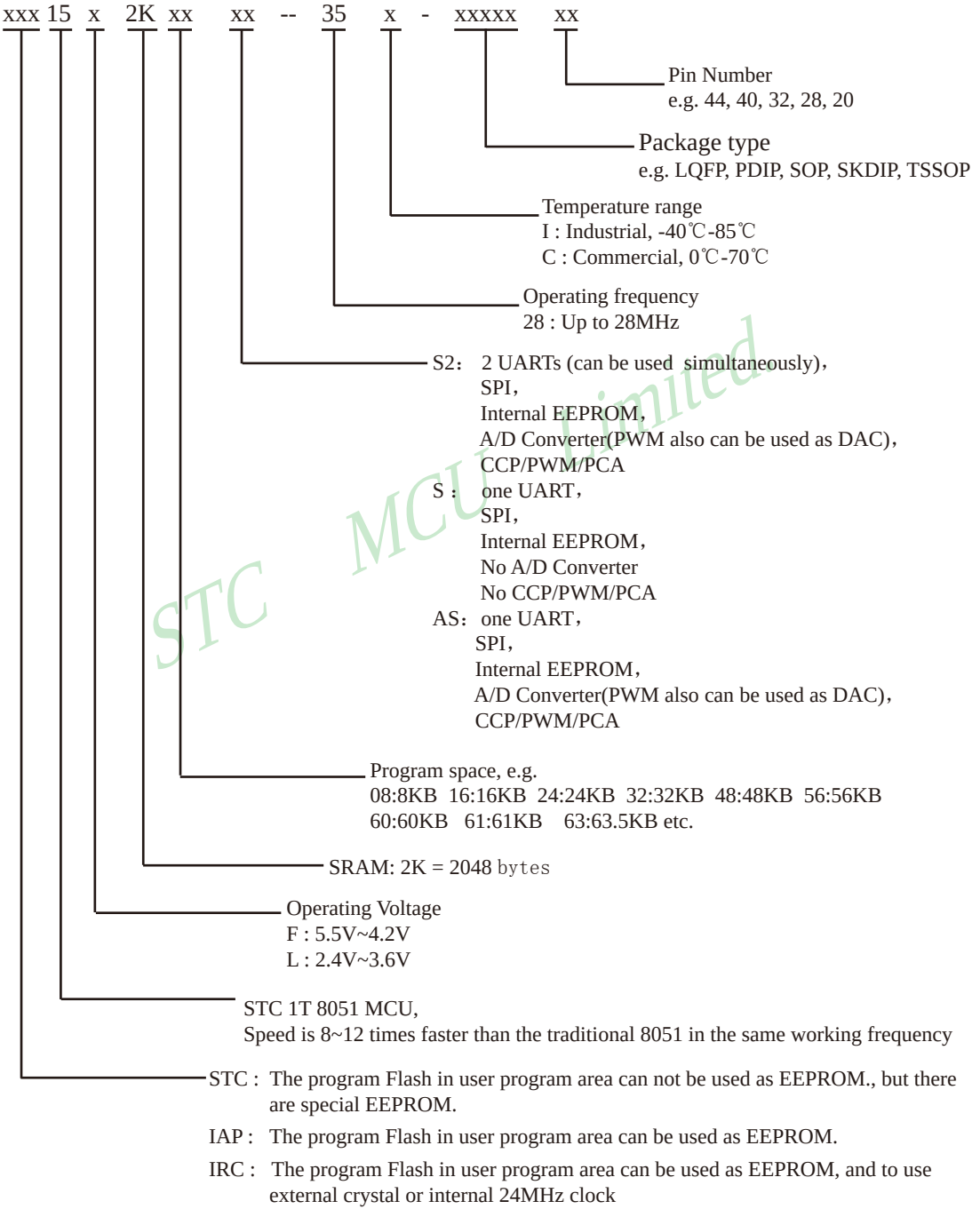

STC MCU Limited

1.1.7 Minimum Application System of STC15F2K60S2 Series MCU

Note：P0 ports can be multiplexed as Address/Data bus，not as A/D Converter. 8 channels of A/D Converter are on P1.

Consequently：P0.x/ADx means that P0.x can be used as Address/Data bus, while P1.x/ADCx means P1.x can be used as A/D conversion channel in the pin map.

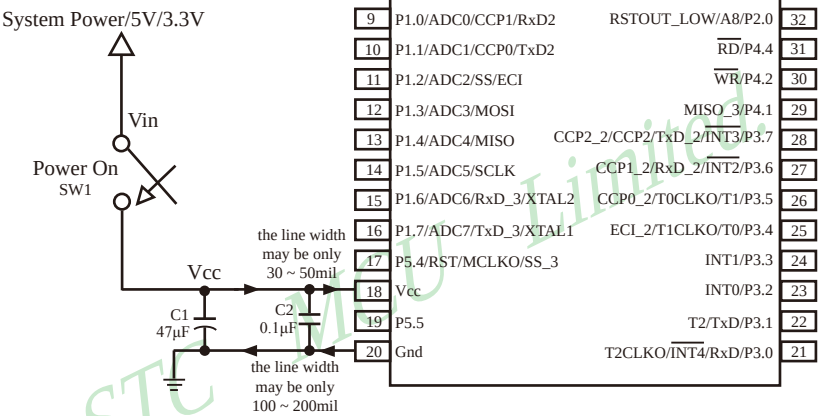

Internal hghly reliable Reset, External reset circuit can be completely removed.

P5.4/RST/MCLKO pin factory defaults to the I/O port, which can be set as RST reset pin(active high) through the STC-ISP programmer.

Internal high-precise R/C clock(±3%), ±1% temperature drift (-40℃~+85℃) while ±0.6% in normal temperature (-20℃~+65℃). External expensive crysal can be completely removed.

Recommend to add decoupling capacitor C1(47μF) and C2(0.1μF) between Vcc and Gnd that can remove power noise and improve the anti-interference ability.

STC MCU Limited.

1.1.8 Circuit Diagram connecting External Crystal Oscillator and Reset

Note：P0 ports can be multiplexed as Address/Data bus，not as A/D Converter. 8 channels of A/D Converter are on P1.

Consequently：P0.x/ADx means that P0.x can be used as Address/Data bus, while P1.x/ADCx means P1.x can be used as A/D conversion channel in the pin map.

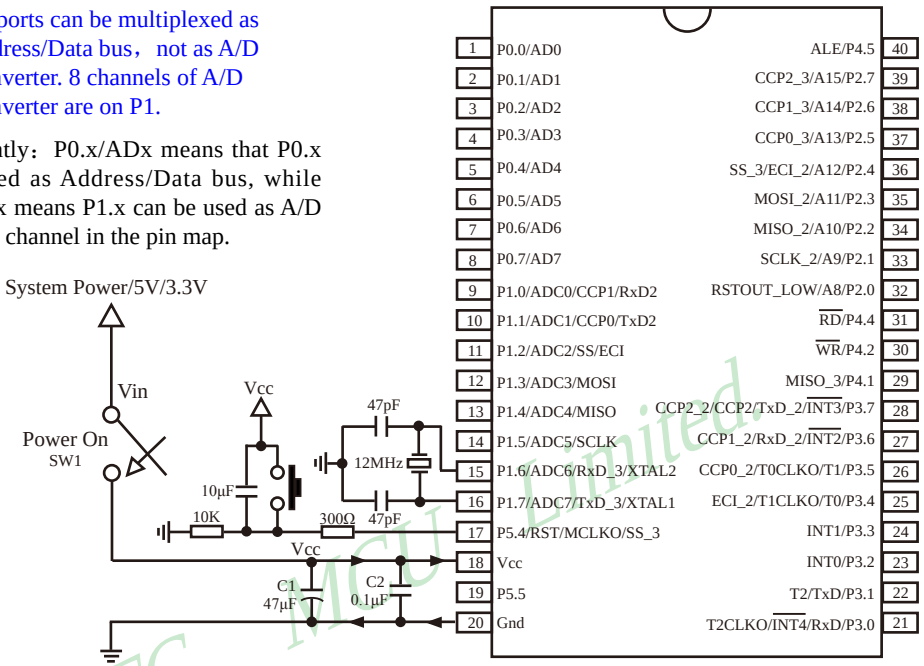

Internal hghly reliable Reset. External reset circuit can be completely removed, which also can be used as shown in above diagram.

P5.4/RST/MCLKO pin factory defaults to the I/O port, which can be set as RST reset pin(active high) through the STC-ISP programmer.

Internal high-precise R/C clock(±3%), ±1% temperature drift (-40℃~+85℃) while ±0.6% in normal temperature (-20℃~+65℃) . External expensive crysal can be completely removed, which also can be used as shown in above diagram. MCU defaults to use internal high precise R/C clock. Please select the option "external crystal or clock" when programming the STC-ISP programmer, if users require the use of external crystal oscillator.

Recommend to add decoupling capacitor C1(47μF) and C2(0.1μF) between Vcc and Gnd that can remove power noise and improve the anti-interference ability.

STC MCU Limited.

1.1.9 Application Circuit Diagram for ISP of STC15F2K60S2 series MCU

1.1.9.1 Application Circuit Diagram for ISP using RS-232 Converter

Note：P0 ports can be multiplexed as Address/Data bus，not as A/D Converter. 8 channels of A/D Converter are on P1.

Consequently：P0.x/ADx means that P0.x can be used as Address/Data bus, while P1.x/ADCx means P1.x can be used as A/D conversion channel in the pin map.

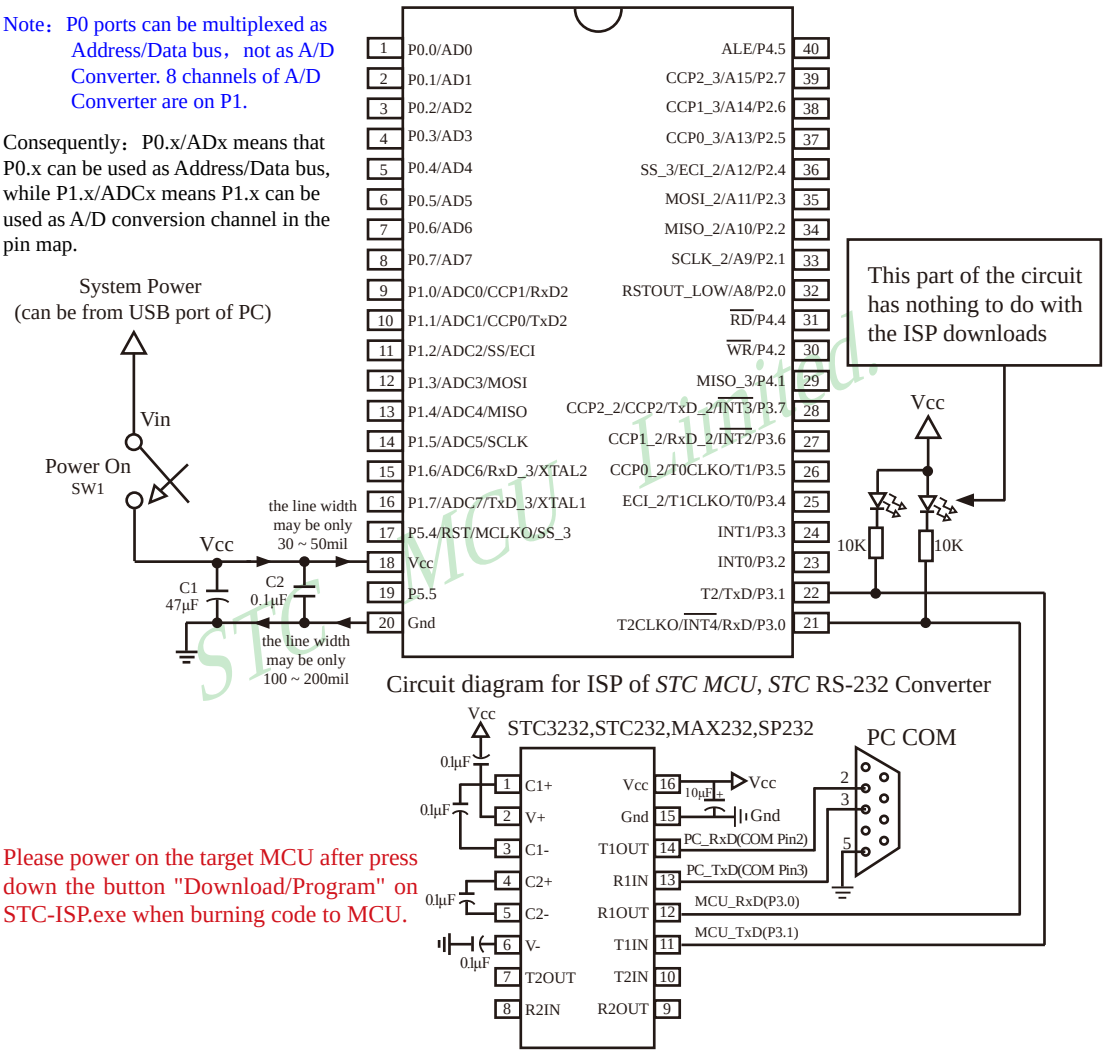

Please power on the target MCU after press down the button "Download/Program" on STC-ISP.exe when burning code to MCU.

Internal hghly reliable Reset. External reset circuit can be completely removed, which also can be used .

P5.4/RST/MCLKO pin factory defaults to the I/O port, which can be set as RST reset pin(active high) through the STC-ISP programmer.

Internal high-precise R/C clock(±3%), ±1% temperature drift (-40℃~+85℃) while ±0.6% in normal temperature (-20℃~+65℃) . External expensive crysal can be completely removed, which also can be used.

Recommend to add decoupling capacitor C1(47μF) and C2(0.1μF) between Vcc and Gnd that can remove power noise and improve the anti-interference ability.

1.1.9.2 Application Circuit Diagram for ISP using USB Chip PL-2303SA to convert Serial Port

Note：P0 ports can be multiplexed as Address/Data bus，not as A/D Converter. 8 channels of A/D Converter are on P1.

Consequently：P0.x/ADx means that P0.x can be used as Address/Data bus, while P1.x/ADCx means P1.x can be used as A/D conversion channel in the pin map.

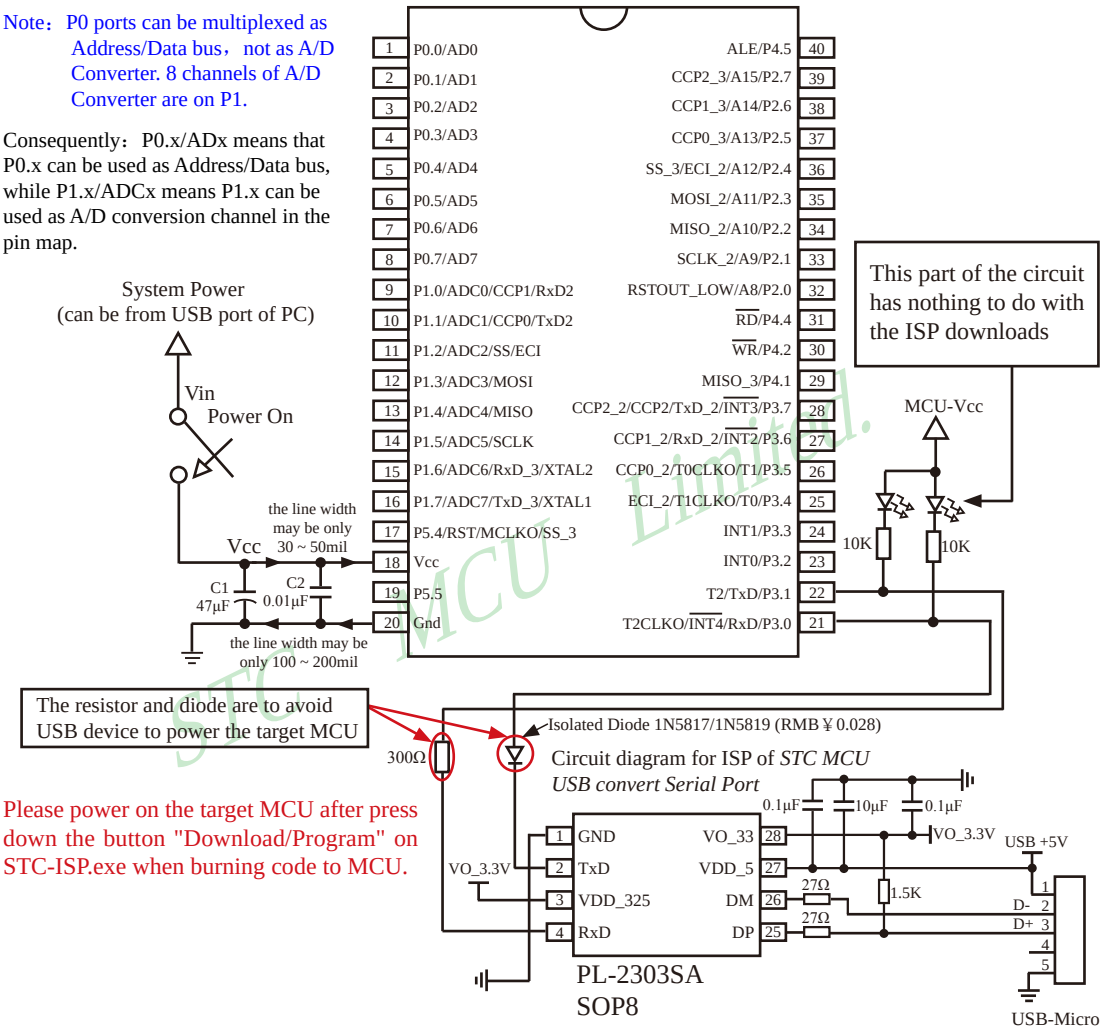

Please power on the target MCU after press down the button "Download/Program" on STC-ISP.exe when burning code to MCU.

Internal hghly reliable Reset. External reset circuit can be completely removed, which also can be used .

P5.4/RST/MCLKO pin factory defaults to the I/O port, which can be set as RST reset pin(active high) through the STC-ISP programmer.

Internal high-precise R/C clock(±3%), ±1% temperature drift (-40℃~+85℃) while ±0.6% in normal temperature (-20℃~+65℃) . External expensive crysal can be completely removed, which also can be used.

Recommend to add decoupling capacitor C1(47μF) and C2(0.1μF) between Vcc and Gnd that can remove power noise and improve the anti-interference ability.

1.1.9.3 Application Circuit Diagram for ISP using USB Chip PL-2303HXD / PL-2303HX to convert Serial Port

Note：P0 ports can be multiplexed as Address/Data bus，not as A/D Converter. 8 channels of A/D Converter are on P1.

Consequently：P0.x/ADx means that P0.x can be used as Address/Data bus, while P1.x/ADCx means P1.x can be used as A/D conversion channel in the pin map.

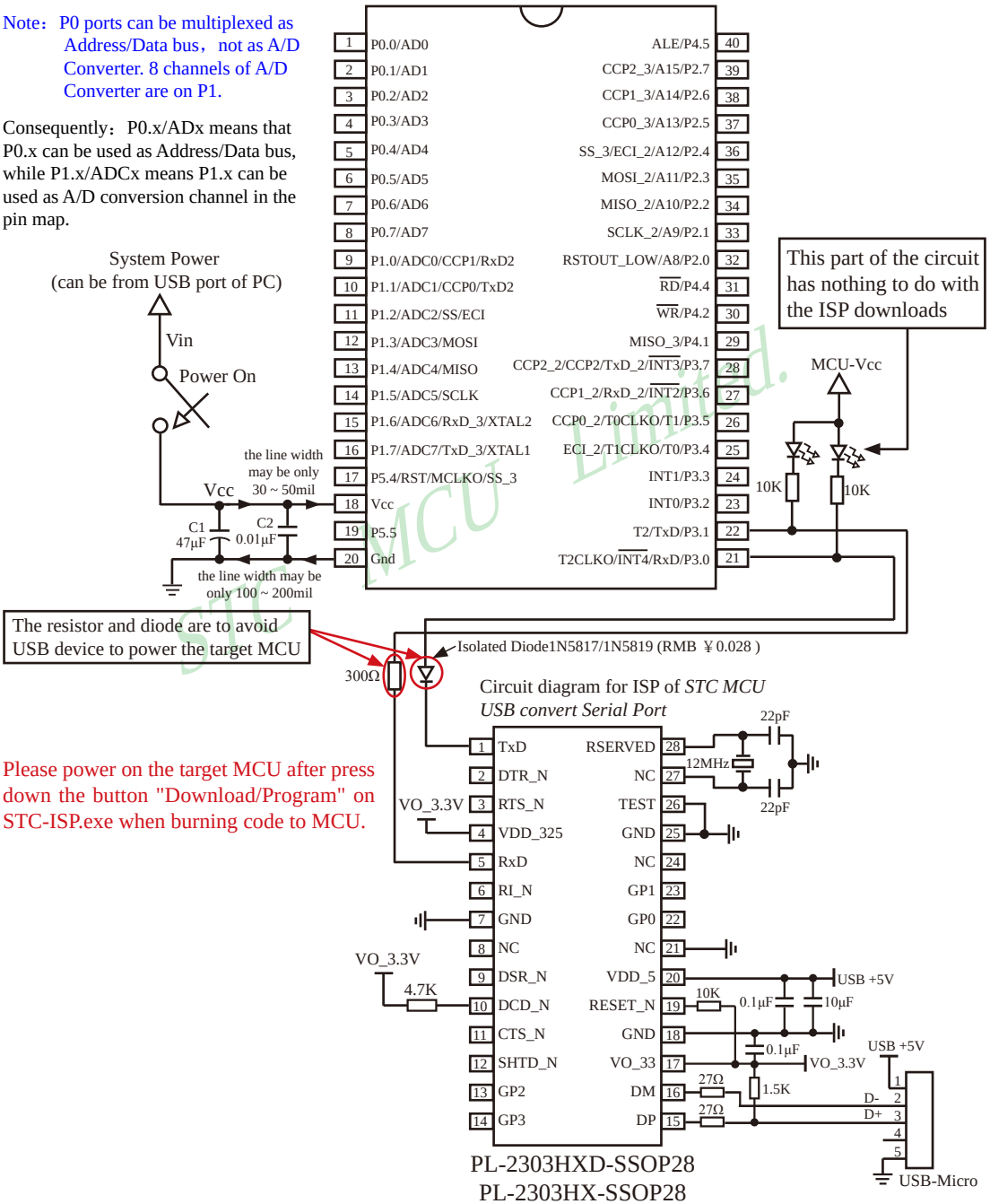

Please power on the target MCU after press down the button "Download/Program" on STC-ISP.exe when burning code to MCU.

STC MCU Limited.

1.1.10 Pin Descriptions of STC15F2K60S2 series MCU

MNEMONIC	Pin Number							DESCRIPTION	
	LQFP44	PLCC44	PDIP40	SOP32	LQFP32	SOP28 SKDIP28	TSSOP20		
P0.0/AD0	40	2	1	1	29	-		P0.0	common I/O port PORT0[0]
P0.1/AD1	41	3	2	2	30	-		P0.1	common I/O port PORT0[1]
P0.2/AD2	42	4	3	3	31	-		P0.2	common I/O port PORT0[2]
P0.3/AD3	43	5	4	4	32	-		P0.3	common I/O port PORT0[3]
P0.4/AD4	44	6	5	-	-	-		P0.4	common I/O port PORT0[4]
P0.5/AD5	1	7	6	-	-	-		P0.5	common I/O port PORT0[5]
P0.6/AD5	2	8	7	-	-	-		common I/O port PORT0[6]	
P0.7/AD7	3	9	8	-	-	-		common I/O port PORT0[7]	
P1.0/ADC0/ CCP1/RxD2	4	10	9	5	1	3	1	P1.0	common I/O port PORT1[0]
								ADC0	ADC input channel-0
								CCP1	Capture of external signal(measure frequency or be used as external interrupts)、high-speed Pulse and Pulse-Width Modulation output channel-1
								RxD2	Receive Data Port of UART2
P1.1/ADC1/ CCP0/TxD2	5	11	10	6	2	4	2	P1.1	common I/O port PORT1[1]
								ADC1	ADC input channel-1
								CCP0	Capture of external signal(measure frequency or be used as external interrupts)、high-speed Pulse and Pulse-Width Modulation output channel-0
								TxD2	Transit Data Port of UART2
P1.2/ADC2/SS/ ECI	7	13	11	7	3	5	20	P1.2	common I/O port PORT1[2]
								ADC2	ADC input channel-2
								SS	Slave selection signal of synchronous serial peripheral interface----SPI
								ECI	External pulse input pin of CCP/PCA counter
P1.3/ADC3/ MOSI	8	14	12	8	4	6	19	P1.3	common I/O port PORT1[3]
								ADC3	ADC input channel-3
								MOSI	Master Output Slave Input of SPI
P1.4/ADC4/ MISO	9	15	13	9	5	7	3	P1.4	common I/O port PORT1[4]
								ADC4	ADC input channel-4
								MISO	Master Iutput Slave Onput of SPI
P1.5/ADC5/ SCLK	10	16	14	10	6	8	4	P1.5	common I/O port PORT1[5]
								ADC5	ADC input channel-5
								SCLK	Clock Signal of synchronous serial peripheral interface----SPI

STC MCU Limited

MNEMONIC	Pin Number							DESCRIPTION	
	LQFP44	PLCC44	PDIP40	SOP32	LQFP32	SOP28 SKDIP28	TSSOP20		
P1.6/ADC6/ RxD_3/XTAL2	11	17	15	11	7	9	5	P1.6	common I/O port PORT1[6]
								ADC6	ADC input channel--6
								RxD_3	Receive Data Port of UART1
								XTAL2	Output from the inverting amplifier of internal clock circuit. This pin should be floated when an external oscillator is used.
P1.7/ADC7/ TxD_3/XTAL1	12	18	16	12	8	10	6	P1.7	common I/O port PORT1[7]
								ADC7	ADC input channel--7
								TxD_3	Transit Data Port of UART1
								XTAL1	Input to the inverting oscillator amplifier of internal clock circuit. Receives the external oscillator signal when an external oscillator is used.
P2.0/ RSTOUT_LOW	30	36	32	25	21	23		P2.0	common I/O port PORT2[0]
								RSTOUT_LOW	the pin output low after power-on and during reset, which can be set to output high by software
P2.1/SCLK_2	31	37	33	26	22	24		P2.1	common I/O port PORT2[1]
								SCLK_2	Clock Signal of synchronous serial peripheral interface----SPI
P2.2/MISO_2	32	38	34	27	23	25		P2.2	common I/O port PORT2[2]
								MISO_2	Master Iutput Slave Onput of SPI
P2.3/MOSI_2	33	39	35	28	24	26		P2.3	common I/O port PORT2[3]
								MOSI_2	Master Output Slave Input of SPI
P2.4/ECI_3/ SS_2	34	40	36	29	25	27		P2.4	common I/O port PORT2[4]
								ECI_3	External pulse input pin of CCP/ PCA counter
								SS_2	Slave selection signal of synchronous serial peripheral interface----SPI
P2.5/CCP0_3	35	41	37	30	26	28		P2.5	common I/O port PORT2[5]
								CCP0_3	Capture of external signal(measure frequency or be used as external interrupts)、high-speed Pulse and Pulse-Width Modulation output channel-0
P2.6/CCP1_3		42	38	31	27	1		P2.6	common I/O port PORT2[6]
								CCP1_3	Capture of external signal(measure frequency or be used as external interrupts)、high-speed Pulse and Pulse-Width Modulation output channel-1

STC MCU Limited

MNEMONIC	Pin Number							DESCRIPTION	
	LQFP44	PLCC44	PDIP40	SOP32	LQFP32	SOP28 SKDIP28	TSSOP20		
P2.7/CCP2_3	37	43	39	32	28	2		P2.7	common I/O port PORT2[7]
								CCP2_3	Capture of external signal(measure frequency or be used as external interrupts)、high-speed Pulse and Pulse-Width Modulation output channel-2
P3.0/RxD/ $\overline{\text{INT4}}$ /T2CLKO	18	24	21	17	13	15	11	P3.0	common I/O port PORT3[0]
								RxD	Receive Data Port of UART1
								$\overline{\text{INT4}}$	External interrupt 4, which only can be generated on falling edge. /INT4 supports power-down waking-up
								T2CLKO	T2 Clock Output The pin can be configured for T2CLKO by setting INT_CLKO[2] bit /T2CLKO
P3.1/TxD/T2	19	25	22	18	14	16	12	P3.1	common I/O port PORT3[1]
								TxD	Transit Data Port of UART1
								T2	External input of Timer/Counter 2
P3.2/INT0	20	26	23	19	15	17	13	P3.2	common I/O port PORT3[2]
								INT0	External interrupt 0, which both can be generated on rising and falling edge. INT0 only can generate interrupt on falling edge if IT0 (TCON.0) is set to 1. And, INT0 both can generate interrupt on rising and falling edge if IT0 (TCON.0) is set to 0.
P3.3/INT1	21	27	24	20	16	18	18	P3.3	common I/O port PORT3[3]
								INT1	External interrupt 1, which both can be generated on rising and falling edge. INT1 only can generate interrupt on falling edge if IT1 (TCON.2) is set to 1. And, INT1 both can generate interrupt on rising and falling edge if IT1 (TCON.2) is set to 0. INT1 supports power-down waking-up
P3.4/T0/ T1CLKO/ ECI_2	22	28	25	21	17	19	14	P3.4	common I/O port PORT3[4]
								T0	External input of Timer/Counter 0
								T1CLKO	T1 Clock Output The pin can be configured for T1CLKO by setting INT_CLKO[1] bit /T1CLKO
								ECI_2	External pulse input pin of CCP/PCA counter
P3.5/T1/ T0CLKO/ CCP0_2	23	29	26	22	18	20	15	P3.5	common I/O port PORT3[5]
								T1	External input of Timer/Counter 1
								T0CLKO	T0 Clock Output The pin can be configured for T0CLKO by setting INT_CLKO[0] bit /T0CLKO
								CCP0_2	Capture of external signal(measure frequency or be used as external interrupts)、high-speed Pulse and Pulse-Width Modulation output channel-0

STC MCU Limited

MNEMONIC	Pin Number							DESCRIPTION	
	LQFP44	PLCC44	PDIP40	SOP32	LQFP32	SOP28 SKDIP28	TSSOP20		
P3.6/$\overline{\text{INT2}}$ /RxD_2/ CCP1_2	24	30	27	23	19	21	16	P3.6	common I/O port PORT3[6]
								$\overline{\text{INT2}}$	External interrupt 2, which only can be generated on falling edge. /INT2 supports power-down waking-up
								RxD_2	Receive Data Port of UART1
								CCP1_2	Capture of external signal(measure frequency or be used as external interrupts)、high-speed Pulse and Pulse-Width Modulation output channel-1
P3.7/$\overline{\text{INT3}}$ /TxD_2/CCP2/ CCP2_2	25	31	28	24	20	22	17	P3.7	common I/O port PORT3[7]
								$\overline{\text{INT3}}$	External interrupt 3, which only can be generated on falling edge. /INT3 supports power-down waking-up
								TxD_2	Transit Data Port of UART1
								CCP2	Capture of external signal(measure frequency or be used as external interrupts)、high-speed Pulse and Pulse-Width Modulation output channel-2
								CCP2_2	Capture of external signal(measure frequency or be used as external interrupts)、high-speed Pulse and Pulse-Width Modulation output channel-2
P4.0/MOSI_3	17	23	-	-	-	-		P4.0	common I/O port PORT4[0]
								MISO_3	Master Iutput Slave Onput of SPI
P4.1/MISO_3	26	32	29	-	-	-		P4.1	common I/O port PORT4[1]
								MOSI_3	Master Output Slave Input of SPI
P4.2/$\overline{\text{WR}}$	27	33	30	-	-	-		P4.2	common I/O port PORT4[2]
								$\overline{\text{WR}}$	Write pulse of external data memory
P4.3/SCLK_3	28	34	-	-	-	-		P4.3	PORT4[3]
								SCLK_3	Clock Signal of synchronous serial peripheral interface----SPI
P4.4/$\overline{\text{RD}}$	29	35	31	-	-	-		P4.4	common I/O port PORT4[4]
								$\overline{\text{RD}}$	Read pulse of external data memory
P4.5/ALE	38	44	40	-	-	-		P4.5	common I/O port PORT4[5]
								ALE	Address Latch Enable. It is used for external data memory cycles (MOVX)
P4.6/RxD2_2	39	1	-	-	-	-		P4.6	common I/O port PORT4[6]
								RxD2_2	Receive Data Port of UART2
P4.7/TxD2_2	6	12	-	-	-	-		P4.7	common I/O port PORT4[7]
								TxD2_2	Transit Data Port of UART2

STC MCU Limited

MNEMONIC	Pin Number							DESCRIPTION	
	LQFP44	PLCC44	PDIP40	SOP32	LQFP32	SOP28 SKDIP28	TSSOP20		
P5.4/RST/ MCLKO/SS_3	13	19	17	13	9	11	7	P5.4	common I/O port PORT5[4]
								RST	Reset pin. A high on this pin for at least two machine cycles will reset the device.
								MCLKO	Master clock output; the output frequency can be MCLK/1, MCLK/2 and MCLK/4. The master clock can either be internal R/C clock or the external input clock or the external crystal oscillator.
								SS_3	Slave selection signal of synchronous serial peripheral interface----SPI
P5.5	15	21	19	15	11	13	9	common I/O port PORT5[5]	
Vcc	14	20	18	14	10	12	8	The positive pole of power	
Gnd	16	22	20	16	12	14	10	The negative pole of power, Gound	

STC MCU Limited.

1.2 General Overview of STC15F101W series MCU

——Recommend STC15W10x series to Replace STC15L101W series

1.2.1 Introduction of STC15F101W series MCU (In abundant supply)

STC15F101W series MCU is a single-chip microcontroller based on a high performance 1T architecture 8051 CPU, which is produced by STC MCU Limited. It is a new generation of 8051 MCU of high speed, high stability, low power consumption and super strong anti-disturbance. Besides, STC15F101W series MCU is a MCU of super advanced encryption, because it adopts the eighth generation of STC encryption technology. With the enhanced kernel, STC15F101W series MCU is faster than a traditional 8051 in executing instructions (about 8~12 times the rate of a traditional 8051 MCU), and has a fully compatible instruction set with traditional 8051 series microcontroller. External expensive crystal can be removed by being integrated internal high-precise R/C clock(±0.3%) with ±1% temperature drift (-40℃~+85℃) while ±0.6% in normal temperature (-20℃~+65℃) and wide frenquency adjustable between 5MHz and 35MHz. External reset curcuit also can be removed by being integrated internal highly reliable one with 8 levels optional threshold voltage of reset.

In Keil C development environment, select the Intel 8052 to compiling and only contain < reg51.h > as header file.

STC15 series MCU with super high-speed CPU core of STC-Y5 works 20% faster than STC early 1T series (such as STC12/STC11/STC10 series) at same clock frequency.

STC MCU Limited.

- Enhanced 8051 Central Processing Unit, 1T, single clock per machine cycle, faster 8~12 times than the rate of a traditional 8051.
- Operating voltage range:
  STC15F101W series: 5.5V ~ 3.8V (5V MCU).
  STC15L101W series: 3.6V ~ 2.4V (3V MCU).
- On-chip 2K/4K/5K/7K FLASH program memory with flexible ISP/IAP capability, can be repeatedly erased more than 100 thousand times.
- on-chip 128 bytes SRAM
- On-chip EEPROM with large capacity can be repeatedly erased more than 100 thousand times.
- ISP/IAP, In-System-Programming and In-Application-Programming , no need for programmer and emulator.
- Internal hghly reliable Reset with 8 levels optional threshold voltage of reset, external reset curcuit can be completely removed
- Internal high- precise R/C clock(±0.3%) with ±1% temperature drift (-40℃~+85℃) while ±0.6% (-20℃~+65℃) in normal temperature and wide frenquency adjustable between 5MHz and 35MHz (5.5296MHz / 11.0592MHz / 22.1184MHz / 33.1776MHz).
- No need external crystal and reset, and can output clock and low reset signal from MCU.
- Operating frequency range: 0- 35MHz, is equivalent to traditional 8051:0~420MHz.
- UART can be achieved by combining [P3.0/$\overline{\text{INT4}}$, P3.1] with Timer
- Support the function of Encryption Download (to protect your code from being intercepted).
- Support the function of RS485 Control
- Code protection for flash memory access, excellent noise immunity, very low power consumption

- Power management mode: Slow-Down mode, Idle mode(all interrupt can wake up Idle mode), Stop/Power-Down mode.
- Timers which can wake up stop/power-down mode: have internal low-power special wake-up Timer.
- Resource which can wake up stop/power-down mode are: INT0/P3.2, INT1/P3.3 (INT0/INT1, may be generated on both rising and falling edges), $\overline{\text{INT2}}$/P3.4, $\overline{\text{INT3}}$/P3.5, $\overline{\text{INT4}}$/P3.0 ($\overline{\text{INT2}}$ /$\overline{\text{INT3}}$/$\overline{\text{INT4}}$, only be generated on falling edge); pins T0/T2(their falling edge can wake up if T0/T2 have been enabled before power-down mode, but no interrupts can be generatetd); internal low-power special wake-up Timer.
- Two Timers/Counters----T0(are compatible with Timer0 of traditional 8051) and T2, T0/T2 all can independently achieve external programmable clock output
- Programmable clock output function(output by dividing the frequency of the internal system clock or the input clock of external pin):
  The speed of external programmable clock output of 5V MCU is also not more than 13.5MHz, because the output speed of I/O port of STC15 series 5V MCU is not more than 13.5MHz.
  The speed of external programmable clock output of 3.3V MCU is also not more than 8MHz, because the output speed of I/O port of STC15 series 3.3V MCU is not more than 8MHz.
  ① The Programmable clock output of T0 is on P3.5/T0CLKO (output by dividing the frequency of the internal system clock or the input clock of external pin T0/P3.4)
  ② The Programmable clock output of T2 is on P3.0/T2CLKO (output by dividing the frequency of the internal system clock or the input clock of external pin T2/P3.1)
  Two timers/counters in above all can be output by dividing the frequency from 1 to 65536.
  ③ The Programmable clock output of master clock is on P3.4/MCLKO, and its frequency can be divided into MCLK/1, MCLK/2, MCLK/4.
  The master clock can either be internal R/C clock or the external input clock or the external crystal oscillator.
  MCLK is the frequency of master clock. MCLKO is the output of master clock.
  It is on MCLKO/P3.4 that the Programmable clock output of master clock of STC15 series 8-pin MCU (such as STC15F101W series). However, it is on MCLKO/P5.4 that the Programmable clock output of master clock of other STC15 series MCU including 16-pin or more than 16-pin MCU(such as STC15F2K60S2, STC15W4K32S4 and so on)
- One 15 bits Watch-Dog-Timer with 8-bit pre-scaler (one-time-enabled)
- advanced instruction set, which is fully compatible with traditional 8051 MCU, have hardware multiplication / division command.
- 6 common I/O ports are available, their mode is quasi_bidirectional/weak pull-up (traditional 8051 I/O ports mode) after reset, and can be set to four modes: quasi_bidirectional/weak pull-up, strong push-pull/ strong pull-up, input-only/high-impedance and open drain.
  the driving ability of each I/O port can be up to 20mA, but the current of the whole chip don't exceed this maximum 90mA.

STC MCU Limited.

If I/O ports are not enough, it can be extended by connecting a 74HC595(reference price: RMB 0.15 yuan). Besides, cascading several chips also can extend to dozens of I/O ports.

- Package: SOP-8, DIP-8, DFN-8.
- All products are baked 8 hours in high-temperature 175℃ after be packaged, Manufacture guarantee good quality.
- In Keil C development environment, select the Intel 8052 to compiling and only contain < reg51.h > as header

1.2.2 Block diagram of STC15F101W series

The internal structure of STC15F101W series MCU is shown in the block diagram below. STC15F101W series MCU includes central processor unit(CPU), program memory (Flash), data memory(SRAM), Timers/Counters, I/O ports, watchdog, internal high- precise R/C clock, internal hghly reliable Reset and so on.

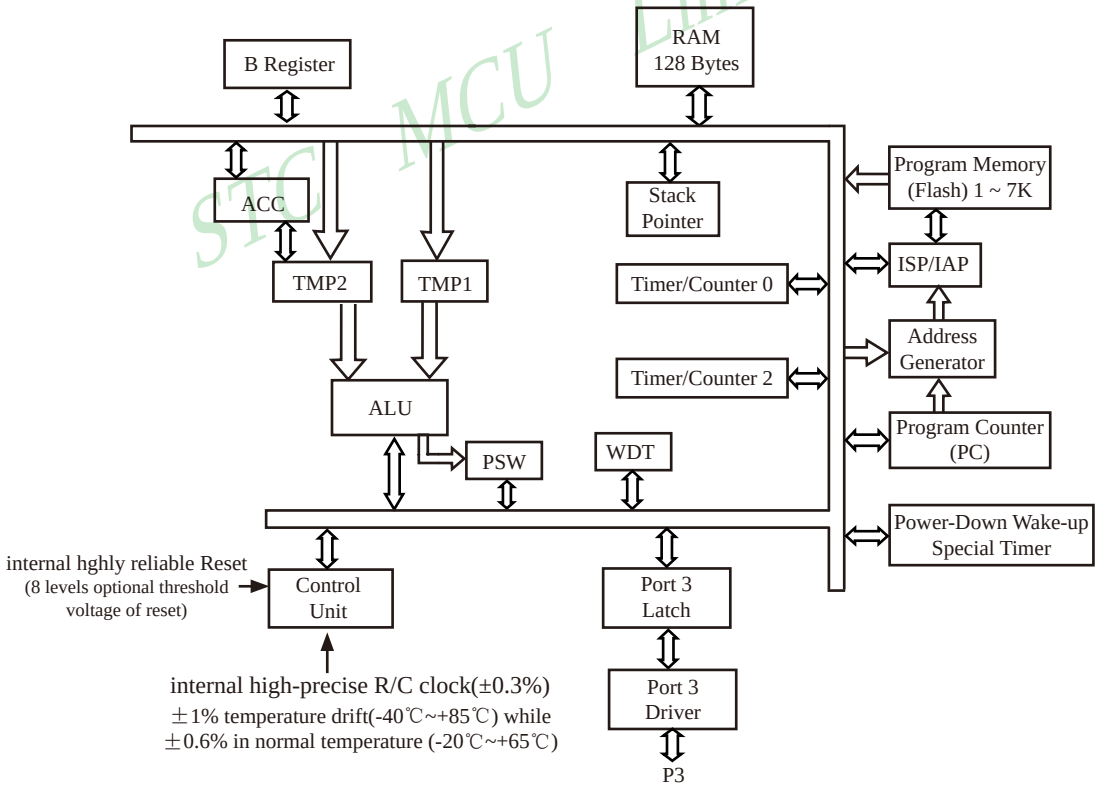

STC15F101W series Block Diagram

1.2.3 Pin Configurations of STC15F101W series MCU

All packages meet EU RoHS standards

The speed of external programmable clock output of 5V MCU is also not more than 13.5MHz, because the output speed of I/O port of STC15 series 5V MCU is not more than 13.5MHz.

The speed of external programmable clock output of 3.3V MCU is also not more than 8MHz, because the output speed of I/O port of STC15 series 3.3V MCU is not more than 8MHz.

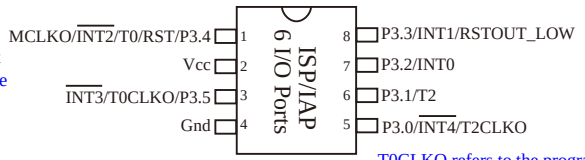

SOP-8/DIP-8
DFN-8

MCLKO is the output of master clock whose frequency can be divided into MCLK/**1, MCLK/2, MCLK/4**
The master clock can either be internal R/C clock or the external input clock or the external crystal oscillator. MCLK is the frequency of master clock.

T0CLKO refers to the programmable clock output of Timer/Counter 0 (output by dividing the frequency of the internal system clock or the input clock of external pin T0/P3.4);

T2CLKO refers to the programmable clock output of Timer/Counter 2 (output by dividing the frequency of the internal system clock or the input clock of external pin T2/P3.1);

In addition to programmable output on the internal system clock, T0CLKO/T2CLKO also can be used as divider by dividing the frequency of the internal system clock or the input clock of external pin T0/T2.

Mnemonic	Add	Name	7	6	5	4	3	2	1	0	Reset Value
CLK_DIV (PCON2)	97H	Clock Division register	MCKO_S1	MCKO_S0	ADRJ	Tx_Rx	Tx2_Rx2	CLKS2	CLKS1	CLKS0	00x0,x000

MCKO_S1	MCKO_S0	the control bit of master clock output by dividing the frequency (The master clock can either be internal R/C clock or the external input clock or the external crystal oscillator)
0	0	Master clock do not output external clock
0	1	Master clock output external clock，but its frequency do not be divided，and the output clock frequency = MCLK / 1
1	0	Master clock output external clock，but its frequency is divided by 2，and the output clock frequency = MCLK / 2
1	1	Master clock output external clock，but its frequency is divided by 4，and the output clock frequency = MCLK / 4

The master clock can either be internal R/C clock or the external input clock or the external crystal oscillator.
MCLK is the frequency of master clock.

STC15104W series MCU output master clock on MCLKO/P3.4

It is on MCLKO/P3.4 that the Programmable clock output of master clock of STC15 series 8-pin MCU (such as STC15F101W series). However, it is on MCLKO/P5.4 that the Programmable clock output of master clock of other STC15 series MCU including 16-pin or more than 16-pin MCU.

Tx_Rx：Setting the external output of P3.1 can reflect the input level state of P3.1 in real time.
0：the external output of P3.1 can not reflect the input level state of P3.1.
1：the external output of P3.1 can reflect the input level state of P3.1 in real time.

CLKS2	CLKS1	CLKS0	the control bit of system clock (System clock refers to the master clock that has been divided frequency, which is offered to CPU and Timers)
0	0	0	Master clock frequency/1, No division
0	0	1	Master clock frequency/2
0	1	0	Master clock frequency/4
0	1	1	Master clock frequency/8
1	0	0	Master clock frequency/16
1	0	1	Master clock frequency/32
1	1	0	Master clock frequency/64
1	1	1	Master clock frequency/128

The master clock can either be internal R/C clock or the external input clock or the external crystal oscillator.

STC MCU Limited.

1.2.4 STC15F101W series Selection and Price Table

Type 1T 8051 MCU	Operating Voltage (V)	Flash (byte)	SRAM (byte)	UART	SPI	common Timers T0/T2	CCP PCA PWM	Speical Power-down Wake-up Timer	Standard External Interrupts	A/D 8-channel	DPTR	EEPROM	Internal Low-Voltage Detection Interrupt	WDT	Internal High-reliable Reset (with optional threshold voltage)	Internal High-Precise Clock	Output clock and reset signal from MCU	Encryption Download (to protect your code from being intercepted)	RS485 Control	All Packages SOP-8/DIP-8/ DFN-8 (6 I/O ports) Price of packages (RMB ¥)		
																				SOP8	DIP8	DFN8
STC15F101W series MCU Selection and Price Table																						
STC15F100W	5.5-3.8	0.5K	128	-	-	2	-	Y	5	-	1	-	Y	Y	8-level	Y	Y	Y	Y	¥0.89		
STC15F101W	5.5-3.8	1K	128	-	-	2	-	Y	5	-	1	4K	Y	Y	8-level	Y	Y	Y	Y	¥0.99	¥1.1	
STC15F102W	5.5-3.8	2K	128	-	-	2	-	Y	5	-	1	3K	Y	Y	8-level	Y	Y	Y	Y	¥1.1	¥1.2	
STC15F103W	5.5-3.8	3K	128	-	-	2	-	Y	5	-	1	2K	Y	Y	8-level	Y	Y	Y	Y	¥1.2	¥1.3	
STC15F104W	5.5-3.8	4K	128	-	-	2	-	Y	5	-	1	1K	Y	Y	8-level	Y	Y	Y	Y	¥1.2	¥1.3	¥1.4
STC15F105W	5.5-3.8	5K	128	-	-	2	-	Y	5	-	1	IAP	Y	Y	8-level	Y	Y	Y	Y	¥1.2	¥1.3	
																				The program Flash in user program area can be used as EEPROM.		
IRC15F107W (Fixed internal 24MHz clock)	5.5-3.8	7K	128	-	-	2	-	Y	5	-	1	IAP	Y	Y	Fixed	Y	Y	N	N	¥1.2	¥1.3	
																				The program Flash in user program area can be used as EEPROM.		
STC15L101W series MCU Selection and Price Table, Recommend STC15W10x series instead of STC15L101W series																						
STC15L100W	5.5-3.8	0.5K	128	-	-	2	-	Y	5	-	1	-	Y	Y	8-level	Y	Y	Y	Y	¥0.89		
STC15L101W	5.5-3.8	1K	128	-	-	2	-	Y	5	-	1	4K	Y	Y	8-level	Y	Y	Y	Y	¥0.99		
STC15L102W	5.5-3.8	2K	128	-	-	2	-	Y	5	-	1	3K	Y	Y	8-level	Y	Y	Y	Y	¥1.1		
STC15L104W	2.4-3.6	4K	128	-	-	2	-	Y	5	-	1	1K	Y	Y	8-level	Y	Y	Y	Y	¥1.2		¥1.4
IAP15L105W	2.4-3.6	5K	128	-	-	2	-	Y	5	-	1	IAP	Y	Y	8-level	Y	Y	Y	Y	¥1.2		
																				The program Flash in user program area can be used as EEPROM.		

Encryption Download : please burn source code with encryption key onto MCU in the factory. Then, you can make a simple update software just with one "update" button by fisrtly using the fuction "encrytion download" and then "release project" to update yourself code unabled to be intercepted when you need to upgrade your code.

To provide customized IC services

Because the last 7 bytes of the program area is stored mandatorily the contents of only global ID, the program space the user can actually use is 7 bytes smaller than the space shown in the selection table.

Conclusion: STC15F101W series MCU have: Two16-bit relaodable Timers/Counters that are Timer/Counter 0 and Timer/ Counter 2; special power-down wake-up timer; 5 external interrupts INT0/INT1/$\overline{\text{INT2}}$/$\overline{\text{INT3}}$/$\overline{\text{INT4}}$; 1 data pointers ---- DPTR.

STC MCU Limited.

1.2.5 Naming rules of STC15F101W series MCU

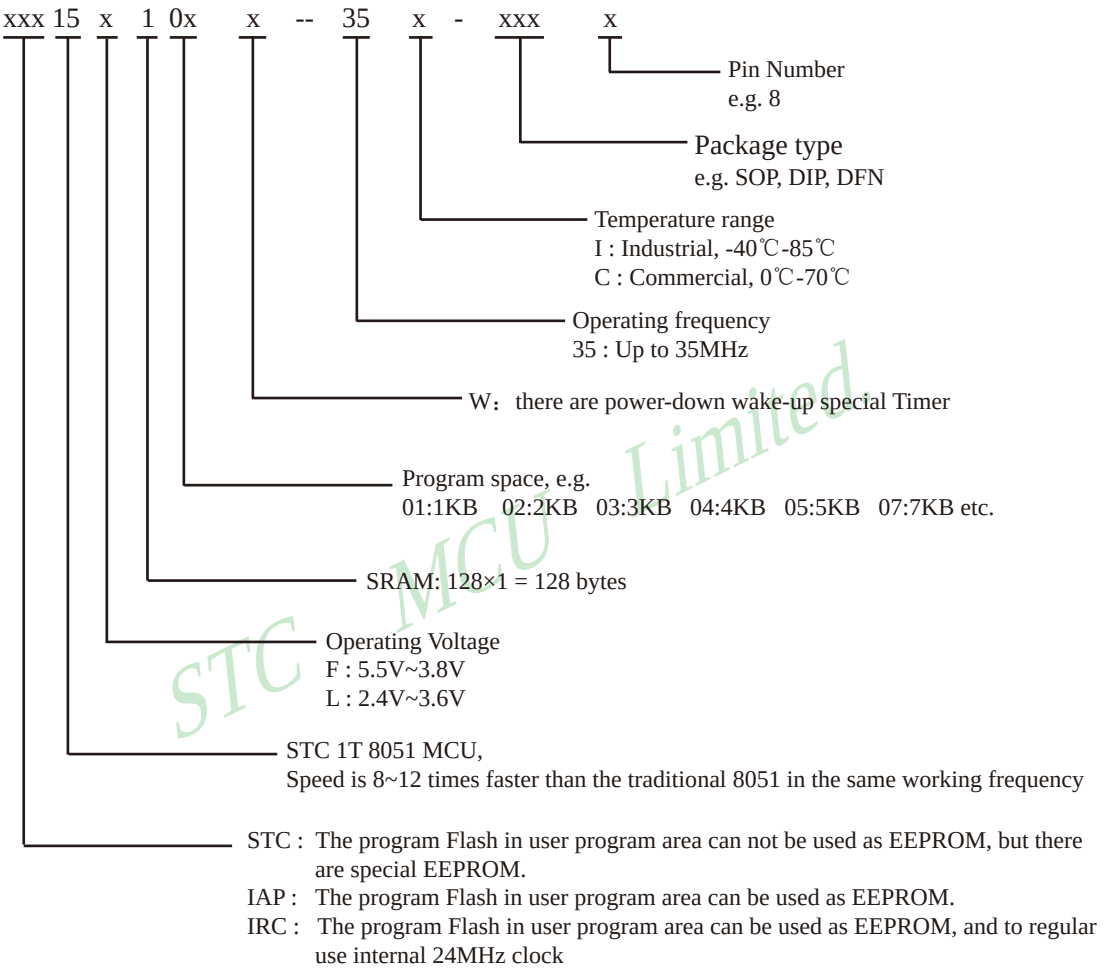

STC MCU Limited

1.2.6 Application Circuit Diagram for ISP of STC15F101W series MCU

1.2.6.1 Application Circuit Diagram for ISP using RS-232 Converter

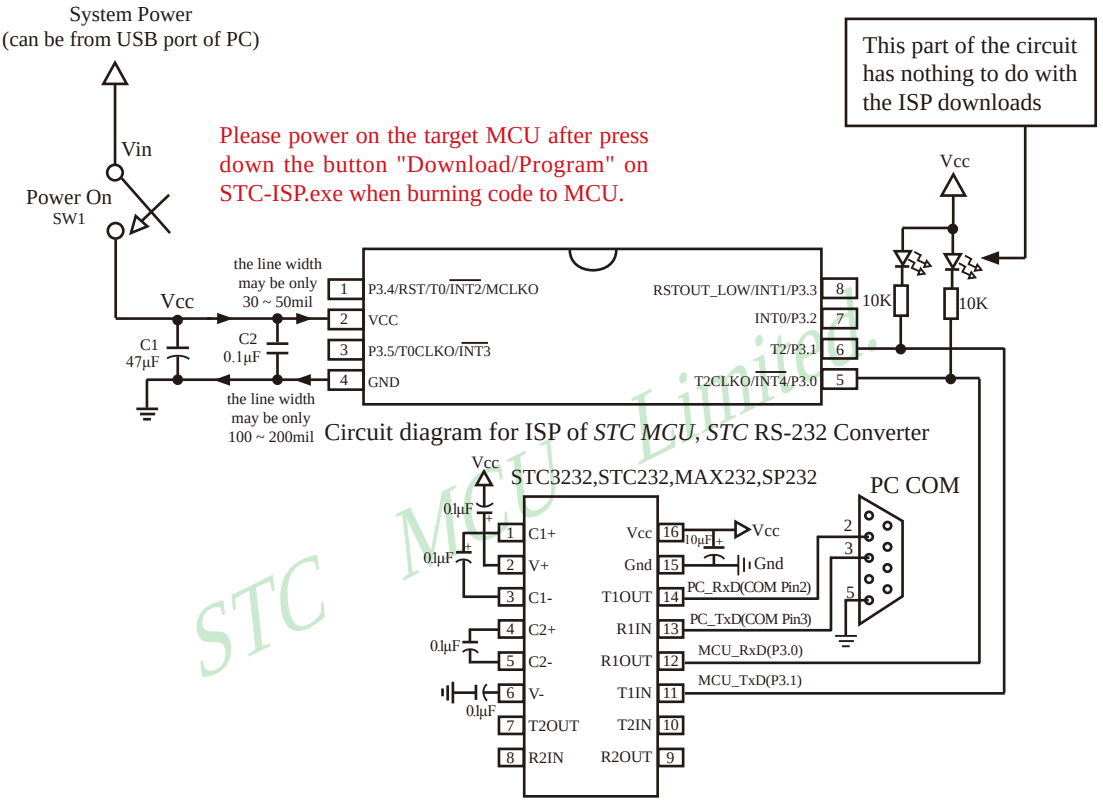

Internal hghly reliable Reset, External reset circuit can be completely removed.

P3.4/RST/T0/$\overline{\text{INT2}}$/MCLKO pin factory defaults to the I/O port, which can be set as RST reset pin(active high) through the STC-ISP programmer.

Internal high-precise R/C clock(±3%), ±1% temperature drift (-40℃~+85℃) while ±0.6% in normal temperature (-20℃~+65℃). External expensive crysal can be completely removed.

Recommend to add decoupling capacitor C1(47μF) and C2(0.1μF) between Vcc and Gnd that can remove power noise and improve the anti-interference ability.

1.2.6.2 Application Circuit Diagram for ISP using USB Chip PL-2303SA to convert Serial Port

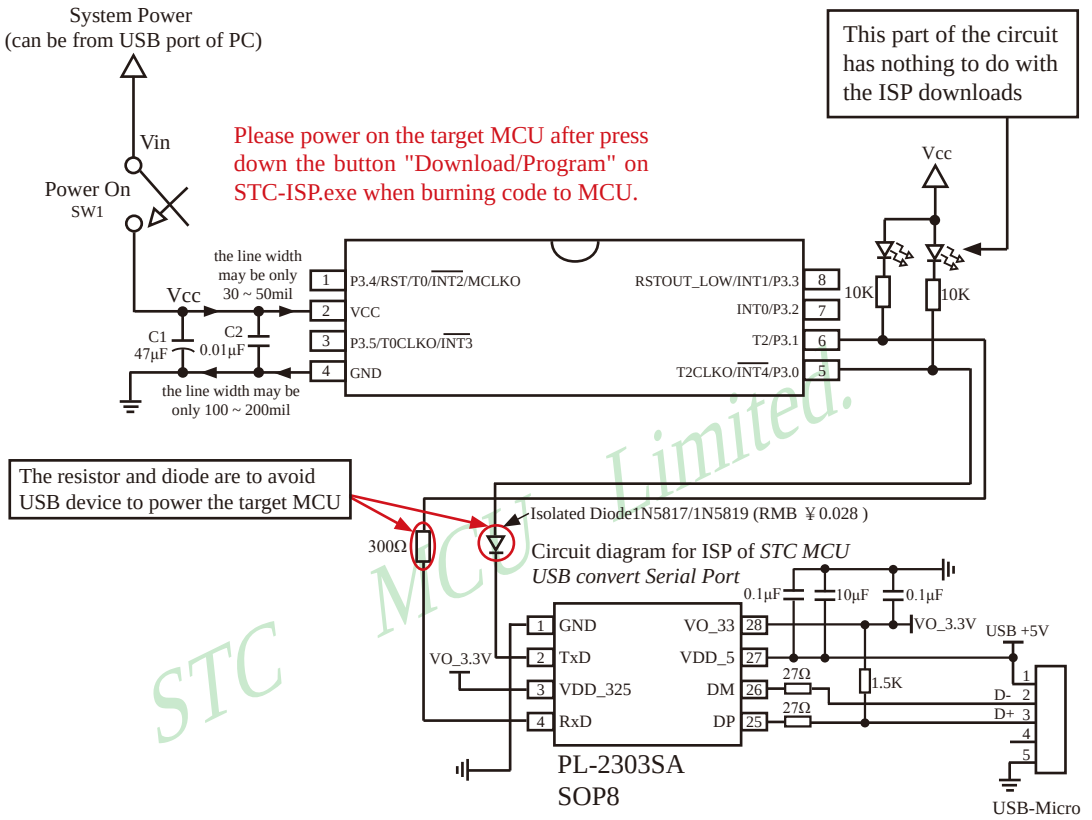

Internal hghly reliable Reset, External reset circuit can be completely removed.

P3.4/RST/T0/$\overline{\text{INT2}}$/MCLKO pin factory defaults to the I/O port, which can be set as RST reset pin(active high) through the STC-ISP programmer.

Internal high-precise R/C clock(±3%), ±1% temperature drift (-40℃~+85℃) while ±0.6% in normal temperature (-20℃~+65℃). External expensive crysal can be completely removed.

Recommend to add decoupling capacitor C1(47μF) and C2(0.1μF) between Vcc and Gnd that can remove power noise and improve the anti-interference ability.

1.2.6.3 Application Circuit Diagram for ISP using USB Chip PL-2303HXD / PL-2303HX to convert Serial Port

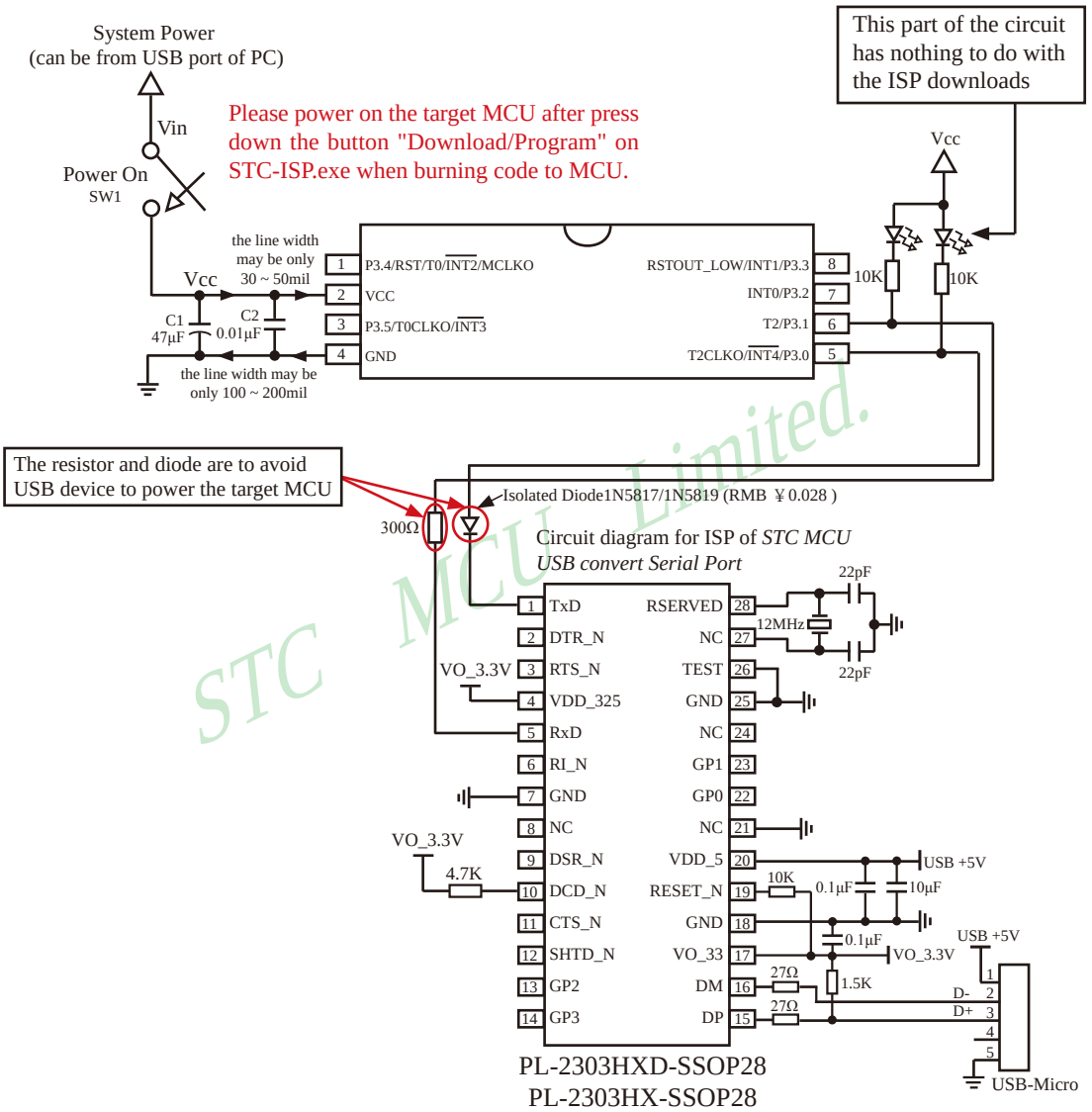

Internal hghly reliable Reset, External reset circuit can be completely removed.

P3.4/RST/T0/$\overline{\text{INT2}}$/MCLKO pin factory defaults to the I/O port, which can be set as RST reset pin(active high) through the STC-ISP programmer.

Internal high-precise R/C clock(±3%), ±1% temperature drift (-40℃~+85℃) while ±0.6% in normal temperature (-20℃~+65℃). External expensive crysal can be completely removed.

Recommend to add decoupling capacitor C1(47μF) and C2(0.1μF) between Vcc and Gnd that can remove power noise and improve the anti-interference ability.

1.2.7 Pin Descriptions of STC15F101W series MCU

MNEMONIC	Pin Number (SOP8/DIP8/DFN8)	DESCRIPTION	
P3.0/$\overline{\text{INT4}}$ /T2CLKO	5	P3.0	common I/O port PORT3[0]
		$\overline{\text{INT4}}$	External interrupt 4, which only can be generated on falling edge. $\overline{\text{INT4}}$ supports power-down waking-up
		T2CLKO	T2 Clock Output The pin can be configured for T2CLKO by setting INT_CLKO[2] bit /T2CLKO
P3.1/T2	6	P3.1	common I/O port PORT3[1]
		T2	External input of Timer/Counter 2
P3.2/INT0	7	P3.2	common I/O port PORT3[2]
		INT0	External interrupt 0, which both can be generated on rising and falling edge. INT0 only can generate interrupt on falling edge if IT0 (TCON.0) is set to 1. And, INT0 both can generate interrupt on rising and falling edge if IT0 (TCON.0) is set to 0.
P3.3/INT1/ RSTOUT_LOW	8	P3.3	common I/O port PORT3[3]
		INT1	External interrupt 1, which both can be generated on rising and falling edge. INT1 only can generate interrupt on falling edge if IT1 (TCON.2) is set to 1. And, INT1 both can generate interrupt on rising and falling edge if IT1 (TCON.2) is set to 0. INT1 supports power-down waking-up
		RSTOUT_LOW	the pin output low after power-on and during reset, which can be set to output high by software
P3.4/RST/T0/ $\overline{\text{INT2}}$/MCLKO	1	P3.4	common I/O port PORT3[4]
		RST	Reset pin. A high on this pin for at least two machine cycles will reset the device.
		T0	External input of Timer/Counter 0
		$\overline{\text{INT2}}$	External interrupt 2, which only can be generated on falling edge. $\overline{\text{INT2}}$ supports power-down waking-up
		MCLKO	Master clock output; the output frequency can be MCLK/1, MCLK/2 and MCLK/4. The master clock can either be internal R/C clock or the external input clock or the external crystal oscillator.
P3.5/T0CLKO/ $\overline{\text{INT3}}$	3	P3.5	common I/O port PORT3[5]
		T0CLKO	T0 Clock Output The pin can be configured for T0CLKO by setting INT_CLKO[0] bit /T0CLKO
		$\overline{\text{INT3}}$	External interrupt 3, which only can be generated on falling edge. $\overline{\text{INT3}}$ supports power-down waking-up
Vcc	2	The positive pole of power	
Gnd	4	The negative pole of power, Gound	

STC MCU Limited.

1.3 General Overview of STC15W10x series MCU

1.3.1 Introduction of STC15W10x series MCU (In abundant supply)

STC15W10x series MCU is a single-chip microcontroller based on a high performance 1T architecture 8051 CPU, which is produced by STC MCU Limited. It is a new generation of 8051 MCU of high speed, high stability, wide voltage range, low power consumption and super strong anti-disturbance. Besides, STC15W10x series MCU is a MCU of super advanced encryption, because it adopts the ninth generation of STC encryption technology. With the enhanced kernel, STC15W10x series MCU is faster than a traditional 8051 in executing instructions (about 8~12 times the rate of a traditional 8051 MCU), and has a fully compatible instruction set with traditional 8051 series microcontroller. External expensive crystal can be removed by being integrated internal high-precise R/C clock(±0.3%) with ±1% temperature drift (-40℃~+85℃) while ±0.6% in normal temperature (-20℃ ~+65℃) and wide frenquency adjustable between 5MHz and 35MHz. External reset curcuit also can be removed by being integrated internal highly reliable one with 16 levels optional threshold voltage of reset.

In Keil C development environment, select the Intel 8052 to compiling and only contain < reg51.h > as header file.

STC15 series MCU with super high-speed CPU core of STC-Y5 works 20% faster than STC early 1T series (such as STC12/STC11/STC10 series) at same clock frequency.

STC MCU Limited.

- Enhanced 8051 Central Processing Unit, 1T, single clock per machine cycle, faster 8~12 times than the rate of a traditional 8051.
- Operating voltage range: 5.5V ~ 2.5V.
- On-chip 2K/4K/5K/7K FLASH program memory with flexible ISP/IAP capability, can be repeatedly erased more than 100 thousand times.
- on-chip 128 bytes SRAM
- On-chip EEPROM with large capacity can be repeatedly erased more than 100 thousand times.
- ISP/IAP, In-System-Programming and In-Application-Programming , no need for programmer and emulator.
- Internal hghly reliable Reset with 16 levels optional threshold voltage of reset, external reset curcuit can be completely removed
- Internal high- precise R/C clock(±0.3%) with ±1% temperature drift (-40℃~+85℃) while ±0.6% (-20℃ ~+65℃) in normal temperature and wide frenquency adjustable between 5MHz and 35MHz (5.5296MHz / 11.0592MHz / 22.1184MHz / 33.1776MHz).
- No need external crystal and reset, and can output clock and low reset signal from MCU.
- Operating frequency range: 0- 35MHz, is equivalent to traditional 8051:0~420MHz.
- UART can be achieved by combining [P3.0/$\overline{\text{INT4}}$, P3.1] with Timer
- Support the function of Encryption Download (to protect your code from being intercepted).
- Support the function of RS485 Control
- Code protection for flash memory access, excellent noise immunity, very low power consumption
- Power management mode: Slow-Down mode, Idle mode(all interrupt can wake up Idle mode), Stop/Power-Down mode.
- Timers which can wake up stop/power-down mode: have internal low-power special wake-up Timer.

- Resource which can wake up stop/power-down mode are: INT0/P3.2, INT1/P3.3 (INT0/INT1, may be generated on both rising and falling edges), $\overline{\text{INT2}}$/P3.4, $\overline{\text{INT3}}$/P3.5, $\overline{\text{INT4}}$/P3.0 ($\overline{\text{INT2}}$/$\overline{\text{INT3}}$/$\overline{\text{INT4}}$, only be generated on falling edge); pins T0/T2(their falling edge can wake up if T0/T2 have been enabled before power-down mode, but no interrupts can be generatetd); internal low-power special wake-up Timer.
- Two Timers/Counters----T0(are compatible with Timer0 of traditional 8051) and T2, T0/T2 all can independently achieve external programmable clock output
- Programmable clock output function(output by dividing the frequency of the internal system clock or the input clock of external pin):
  The speed of external programmable clock output of 5V MCU is also not more than 13.5MHz, because the output speed of I/O port of STC15 series 5V MCU is not more than 13.5MHz.
  The speed of external programmable clock output of 3.3V MCU is also not more than 8MHz, because the output speed of I/O port of STC15 series 3.3V MCU is not more than 8MHz.
  ① The Programmable clock output of T0 is on P3.5/T0CLKO (output by dividing the frequency of the internal system clock or the input clock of external pin T0/P3.4)
  ② The Programmable clock output of T2 is on P3.0/T2CLKO (output by dividing the frequency of the internal system clock or the input clock of external pin T2/P3.1)
  Two timers/counters in above all can be output by dividing the frequency from 1 to 65536.
  ③ The Programmable clock output of master clock is on P3.4/MCLKO, and its frequency can be divided into MCLK/1, MCLK/2, MCLK/4.
  The master clock can either be internal R/C clock or the external input clock or the external crystal oscillator.
  MCLK is the frequency of master clock. MCLKO is the output of master clock.
  It is on MCLKO/P3.4 that the Programmable clock output of master clock of STC15 series 8-pin MCU (such as STC15W10x series). However, it is on MCLKO/P5.4 that the Programmable clock output of master clock of other STC15 series MCU including 16-pin or more than 16-pin MCU(such as STC15F2K60S2, STC15W4K32S4 and so on)
- One 15 bits Watch-Dog-Timer with 8-bit pre-scaler (one-time-enabled)
- advanced instruction set, which is fully compatible with traditional 8051 MCU, have hardware multiplication / division command.
- 6 common I/O ports are available, their mode is quasi_bidirectional/weak pull-up (traditional 8051 I/O ports mode) after reset, and can be set to four modes: quasi_bidirectional/weak pull-up, strong push-pull/ strong pull-up, input-only/high-impedance and open drain.
  the driving ability of each I/O port can be up to 20mA, but the current of the whole chip don't exceed this maximum 90mA.
  If I/O ports are not enough, it can be extended by connecting a 74HC595(reference price: RMB 0.15 yuan). Besides, cascading several chips also can extend to dozens of I/O ports.
- Package: SOP-8, DIP-8, DFN-8.

STC MCU Limited.

- All products are baked 8 hours in high-temperature 175℃ after be packaged, Manufacture guarantee good quality.
- In Keil C development environment, select the Intel 8052 to compiling and only contain < reg51.h > as header file.

1.3.2 Block diagram of STC15W10x series

The internal structure of STC15W10x series MCU is shown in the block diagram below. STC15W10x series MCU includes central processor unit(CPU), program memory (Flash), data memory(SRAM), Timers/Counters, I/O ports, watchdog, internal high- precise R/C clock, internal hghly reliable Reset and so on.

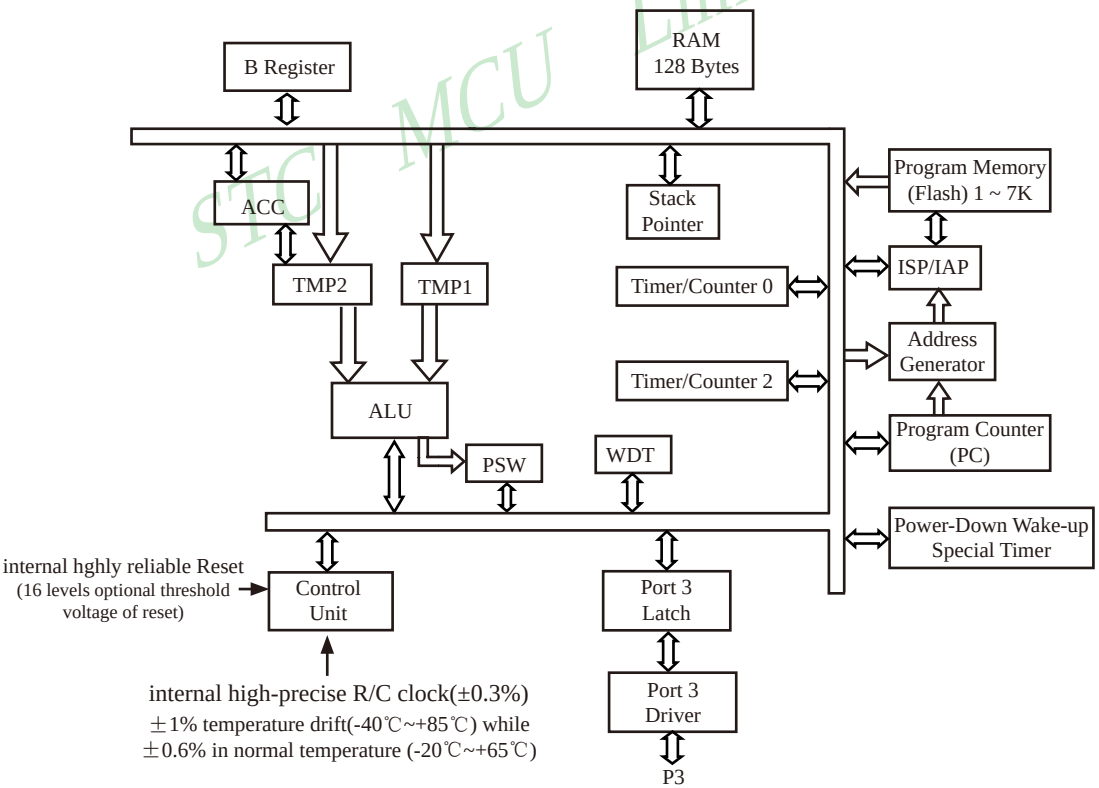

STC15W10x series Block Diagram

1.3.3 Pin Configurations of STC15W10x series MCU

All packages meet EU RoHS standards

The speed of external programmable clock output of 5V MCU is also not more than 13.5MHz, because the output speed of I/O port of STC15 series 5V MCU is not more than 13.5MHz.

The speed of external programmable clock output of 3.3V MCU is also not more than 8MHz, because the output speed of I/O port of STC15 series 3.3V MCU is not more than 8MHz.

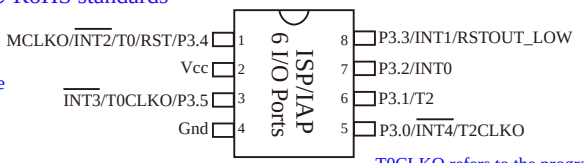

SOP-8/DIP-8
DFN-8

MCLKO is the output of master clock whose frequency can be divided into MCLK/**1, MCLK/2, MCLK/4**
The master clock can either be internal R/C clock or the external input clock or the external crystal oscillator. MCLK is the frequency of master clock.

T0CLKO refers to the programmable clock output of Timer/Counter 0 (output by dividing the frequency of the internal system clock or the input clock of external pin T0/P3.4);

T2CLKO refers to the programmable clock output of Timer/Counter 2 (output by dividing the frequency of the internal system clock or the input clock of external pin T2/P3.1);

In addition to programmable output on the internal system clock, T0CLKO/T2CLKO also can be used as divider by dividing the frequency of the internal system clock or the input clock of external pin T0/T2.

Mnemonic	Add	Name	7	6	5	4	3	2	1	0	Reset Value
CLK_DIV (PCON2)	97H	Clock Division register	MCKO_S1	MCKO_S0	ADRJ	Tx_Rx	Tx2_Rx2	CLKS2	CLKS1	CLKS0	00x0,x000

MCKO_S1	MCKO_S0	the control bit of master clock output by dividing the frequency (The master clock can either be internal R/C clock or the external input clock or the external crystal oscillator)
0	0	Master clock do not output external clock
0	1	Master clock output external clock，but its frequency do not be divided，and the output clock frequency = MCLK / 1
1	0	Master clock output external clock，but its frequency is divided by 2，and the output clock frequency = MCLK / 2
1	1	Master clock output external clock，but its frequency is divided by 4，and the output clock frequency = MCLK / 4

The master clock can either be internal R/C clock or the external input clock or the external crystal oscillator.
MCLK is the frequency of master clock.

STC15104W series MCU output master clock on MCLKO/P3.4

It is on MCLKO/P3.4 that the Programmable clock output of master clock of STC15 series 8-pin MCU (such as STC15W10x series). However, it is on MCLKO/P5.4 that the Programmable clock output of master clock of other STC15 series MCU including 16-pin or more than 16-pin MCU.

Tx_Rx：Setting the external output of P3.1 can reflect the input level state of P3.1 in real time.
0：the external output of P3.1 can not reflect the input level state of P3.1.
1：the external output of P3.1 can reflect the input level state of P3.1 in real time.

CLKS2	CLKS1	CLKS0	the control bit of system clock (System clock refers to the master clock that has been divided frequency, which is offered to CPU and Timers)
0	0	0	Master clock frequency/1, No division
0	0	1	Master clock frequency/2
0	1	0	Master clock frequency/4
0	1	1	Master clock frequency/8
1	0	0	Master clock frequency/16
1	0	1	Master clock frequency/32
1	1	0	Master clock frequency/64
1	1	1	Master clock frequency/128

The master clock can either be internal R/C clock or the external input clock or the external crystal oscillator.

STC MCU Limited.

1.3.4 STC15W10x series Selection and Price Table

Type 1T 8051 MCU	Operating Voltage (V)	Flash (byte)	SRAM (byte)	UART	SPI	common Timers T0/T2	CCP PCA PWM	Speical Power-down Wake-up Timer	Standard External Interrupts	A/D 8-channel	COMPARATOR	DPTR	EEP ROM	Internal Low-Voltage Detection Interrupt	WDT	Internal High-reliable Reset (with optional threshold voltage)	Internal High-Precise Clock	Output clock and reset signal from MCU	Encryption Download (to protect your code from being intercepted)	RS485 Control	All Packages SOP-8/DIP-8/ DFN-8 (6 I/O ports) Price of packages (RMB ¥)		
																					SOP8	DIP8	DFN8
STC15W10x series MCU Selection and Price Table																							
STC15W100	2.5-5.5	0.5K	128	-	-	2	-	Y	5	-	-	1	-	Y	Y	16-level	Y	Y	Y	Y	¥0.99		
STC15W101	2.5-5.5	1K	128	-	-	2	-	Y	5	-	-	1	4K	Y	Y	16-level	Y	Y	Y	Y	¥1.1	¥1.2	
STC15W102	2.5-5.5	2K	128	-	-	2	-	Y	5	-	-	1	3K	Y	Y	16-level	Y	Y	Y	Y	¥1.2	¥1.3	
STC15W103	2.5-5.5	3K	128	-	-	2	-	Y	5	-	-	1	2K	Y	Y	8-level	Y	Y	Y	Y	¥1.3	¥1.4	
STC15W104	2.5-5.5	4K	128	-	-	2	-	Y	5	-	-	1	1K	Y	Y	16-level	Y	Y	Y	Y	¥1.3	¥1.4	¥1.5
IAP15W105	2.5-5.5	5K	128	-	-	2	-	Y	5	-	-	1	IAP	Y	Y	16-level	Y	Y	Y	Y	¥1.3	¥1.4	
																					The program Flash in user program area can be used as EEPROM.		
IRC15W107 (Fixed internal 24MHz clock)	2.5-5.5	7K	128	-	-	2	-	Y	5	-	-	1	IAP	Y	Y	Fixed	Y	Y	N	N	¥1.3	¥1.4	
																					The program Flash in user program area can be used as EEPROM.		

Encryption Download : please burn source code with encryption key onto MCU in the factory. Then, you can make a simple update software just with one "update" button by fisrtly using the fuction "encrytion download" and then "release project" to update yourself code unabled to be intercepted when you need to upgrade your code.

To provide customized IC services

Because the last 7 bytes of the program area is stored mandatorily the contents of only global ID, the program space the user can actually use is 7 bytes smaller than the space shown in the selection table.

Conclusion: STC15W10x series MCU have: Two16-bit relaodable Timers/Counters that are Timer/Counter 0 and Timer/Counter 2; special power-down wake-up timer; 5 external interrupts INT0/INT1/$\overline{\text{INT2}}$/$\overline{\text{INT3}}$/$\overline{\text{INT4}}$; 1 data pointers ---- DPTR.

STC MCU Limited.

1.3.5 Naming rules of STC15W10x series MCU

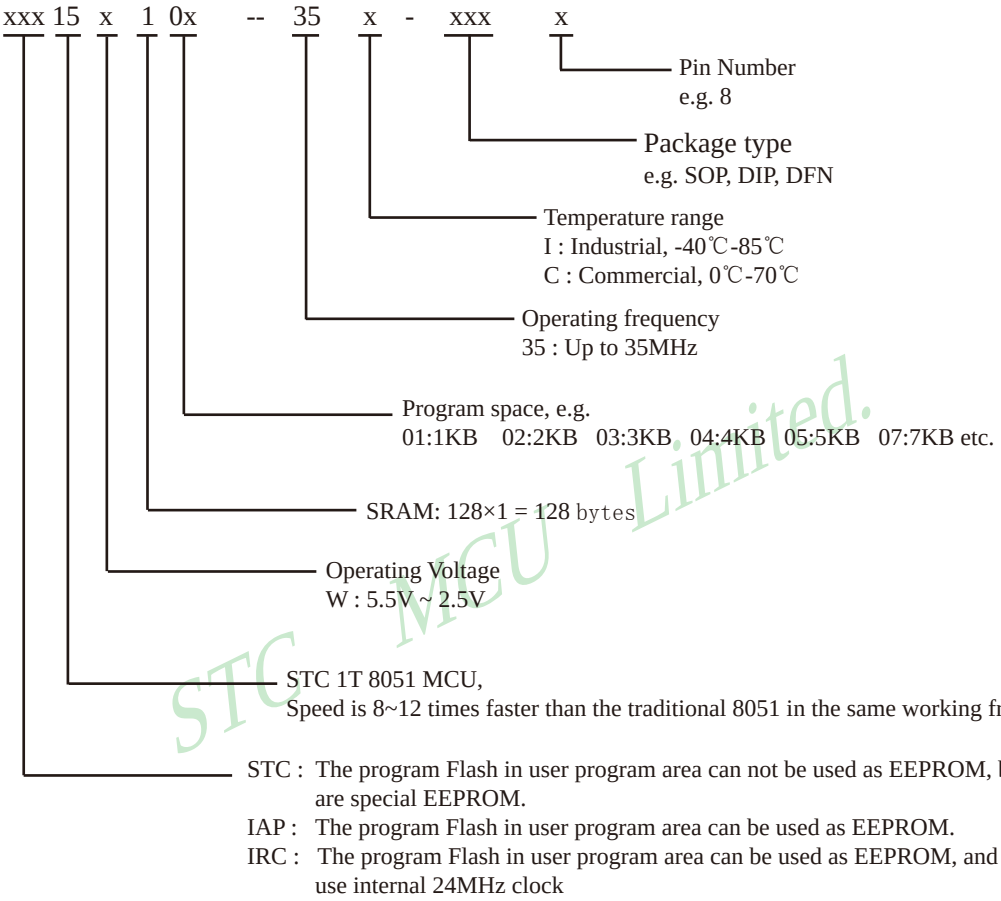

STC MCU Limited.

1.3.6 Application Circuit Diagram for ISP of STC15W10x series MCU

1.3.6.1 Application Circuit Diagram for ISP using RS-232 Converter

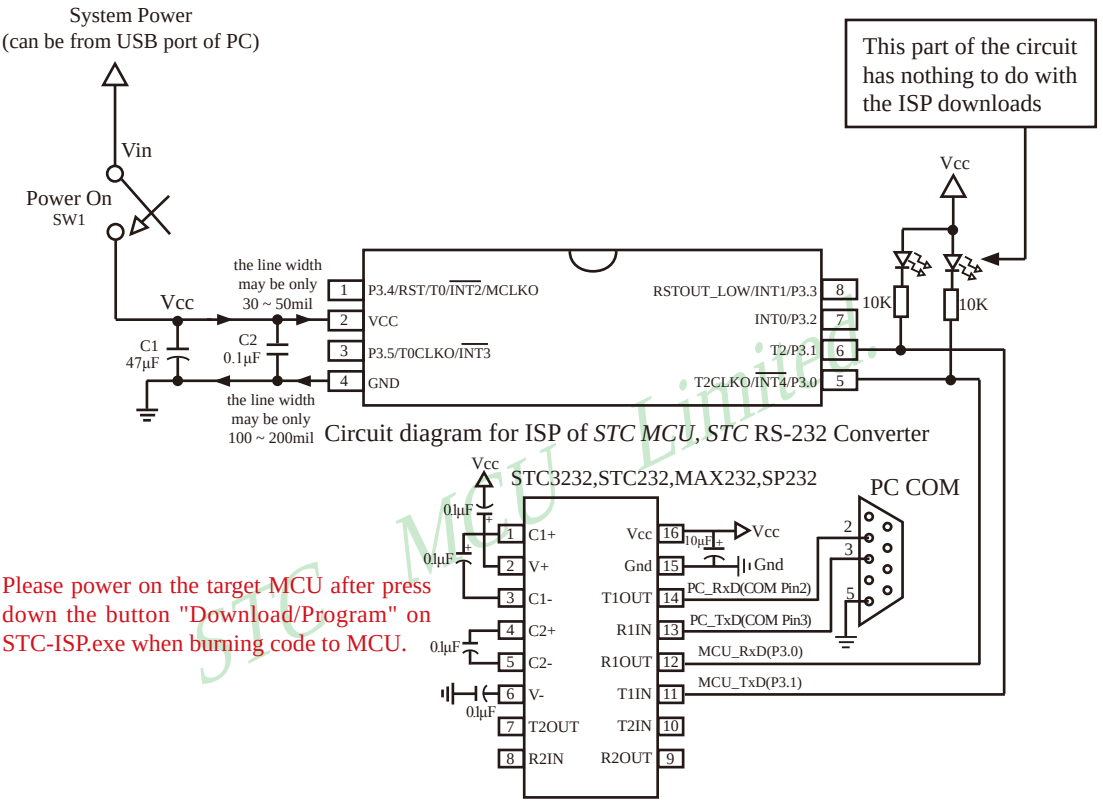

Please power on the target MCU after press down the button "Download/Program" on STC-ISP.exe when burning code to MCU.

Internal hghly reliable Reset, External reset circuit can be completely removed.

P3.4/RST/T0/$\overline{\text{INT2}}$/MCLKO pin factory defaults to the I/O port, which can be set as RST reset pin(active high) through the STC-ISP programmer.

Internal high-precise R/C clock(±3%), ±1% temperature drift (-40℃~+85℃) while ±0.6% in normal temperature (-20℃~+65℃). External expensive crysal can be completely removed.

Recommend to add decoupling capacitor C1(47μF) and C2(0.1μF) between Vcc and Gnd that can remove power noise and improve the anti-interference ability.

1.3.6.2 Application Circuit Diagram for ISP using USB Chip PL-2303SA to convert Serial Port

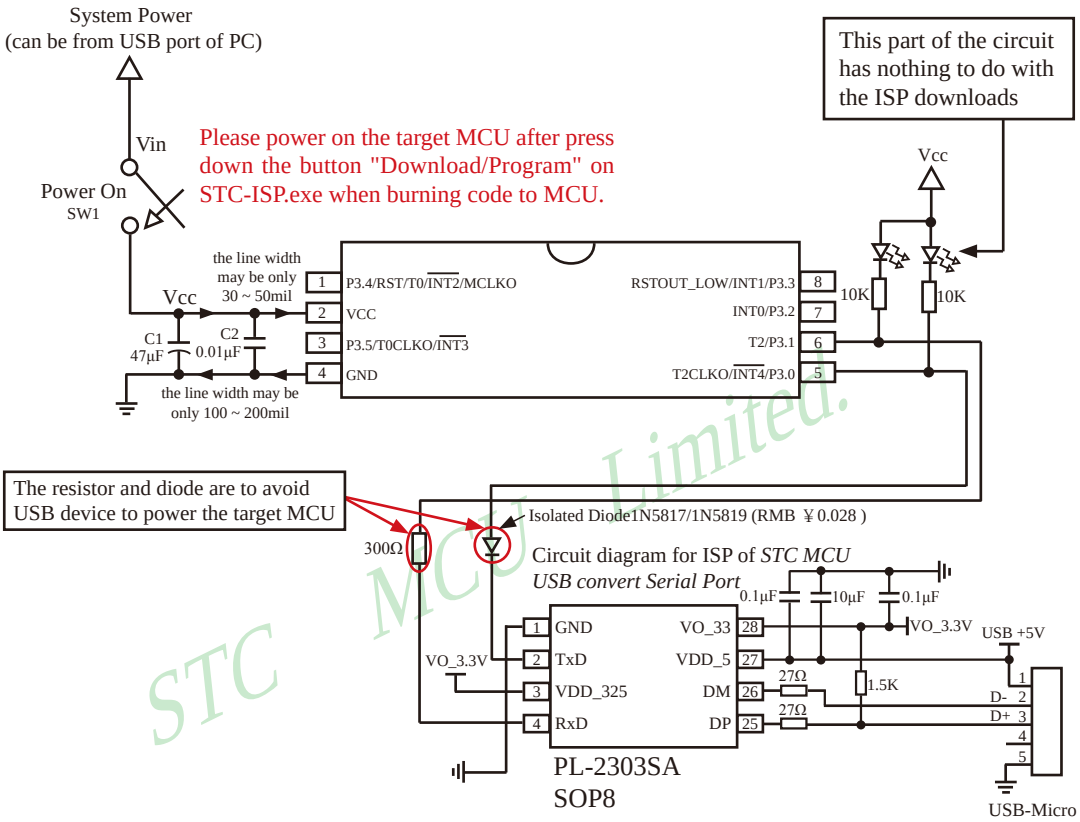

Internal hghly reliable Reset, External reset circuit can be completely removed.

P3.4/RST/T0/$\overline{\text{INT2}}$/MCLKO pin factory defaults to the I/O port, which can be set as RST reset pin(active high) through the STC-ISP programmer.

Internal high-precise R/C clock(±3%), ±1% temperature drift (-40℃~+85℃) while ±0.6% in normal temperature (-20℃~+65℃). External expensive crysal can be completely removed.

Recommend to add decoupling capacitor C1(47μF) and C2(0.1μF) between Vcc and Gnd that can remove power noise and improve the anti-interference ability.

1.3.6.3 Application Circuit Diagram for ISP using USB Chip PL-2303HXD / PL-2303HX to convert Serial Port

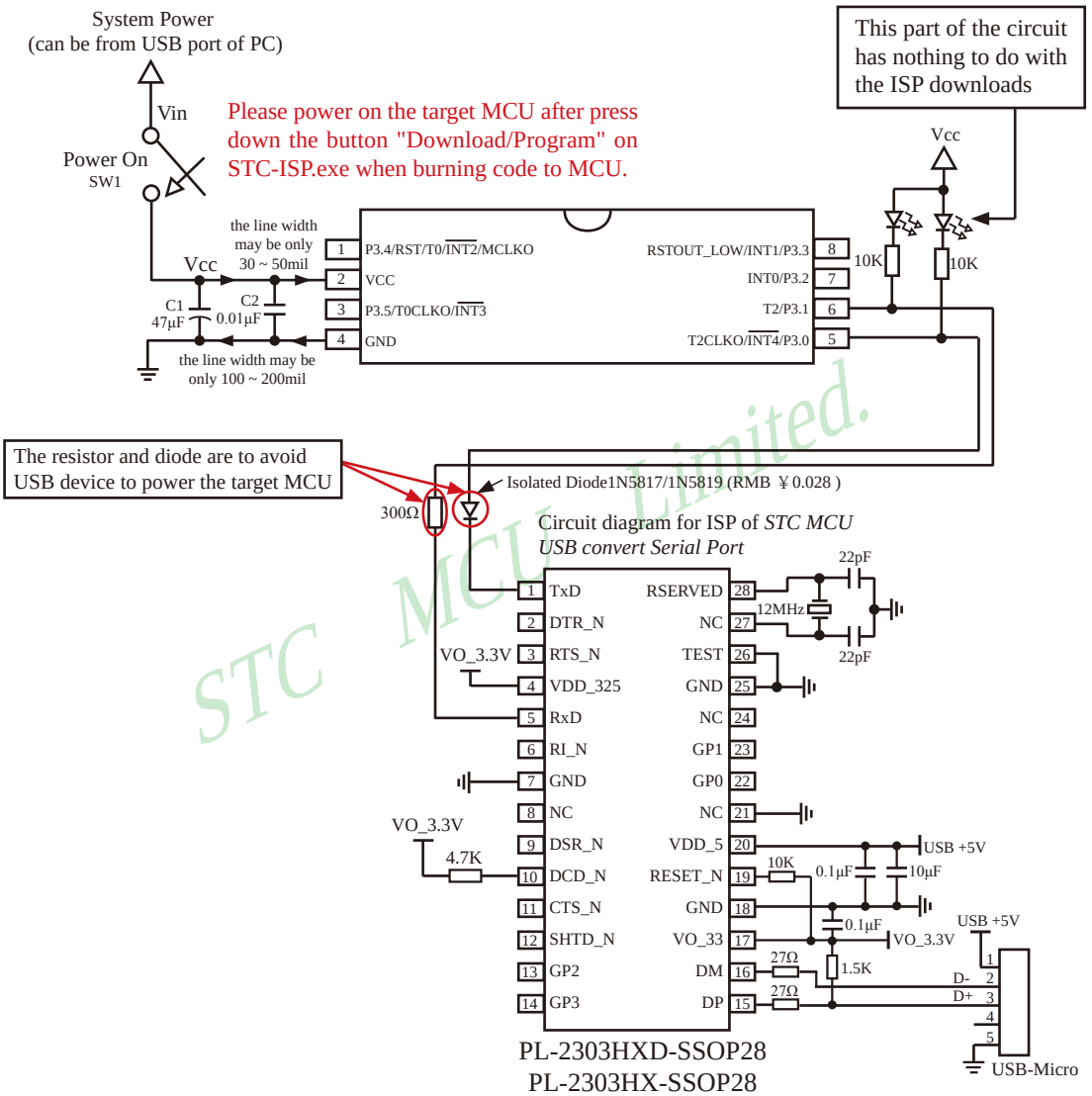

Internal hghly reliable Reset, External reset circuit can be completely removed.

P3.4/RST/T0/$\overline{\text{INT2}}$/MCLKO pin factory defaults to the I/O port, which can be set as RST reset pin(active high) through the STC-ISP programmer.

Internal high-precise R/C clock(±3%), ±1% temperature drift (-40℃~+85℃) while ±0.6% in normal temperature (-20℃~+65℃). External expensive crysal can be completely removed.

Recommend to add decoupling capacitor C1(47μF) and C2(0.1μF) between Vcc and Gnd that can remove power noise and improve the anti-interference ability.

1.3.7 Pin Descriptions of STC15W10x series MCU

MNEMONIC	Pin Number (SOP8/DIP8/DFN8)	DESCRIPTION	
P3.0/$\overline{\text{INT4}}$ /T2CLKO	5	P3.0	common I/O port PORT3[0]
		$\overline{\text{INT4}}$	External interrupt 4, which only can be generated on falling edge. $\overline{\text{INT4}}$ supports power-down waking-up
		T2CLKO	T2 Clock Output The pin can be configured for T2CLKO by setting INT_CLKO[2] bit /T2CLKO
P3.1/T2	6	P3.1	common I/O port PORT3[1]
		T2	External input of Timer/Counter 2
P3.2/INT0	7	P3.2	common I/O port PORT3[2]
		INT0	External interrupt 0, which both can be generated on rising and falling edge. INT0 only can generate interrupt on falling edge if IT0 (TCON.0) is set to 1. And, INT0 both can generate interrupt on rising and falling edge if IT0 (TCON.0) is set to 0.
P3.3/INT1/ RSTOUT_LOW	8	P3.3	common I/O port PORT3[3]
		INT1	External interrupt 1, which both can be generated on rising and falling edge. INT1 only can generate interrupt on falling edge if IT1 (TCON.2) is set to 1. And, INT1 both can generate interrupt on rising and falling edge if IT1 (TCON.2) is set to 0. INT1 supports power-down waking-up
		RSTOUT_LOW	the pin output low after power-on and during reset, which can be set to output high by software
P3.4/RST/T0/ $\overline{\text{INT2}}$/MCLKO	1	P3.4	common I/O port PORT3[4]
		RST	Reset pin. A high on this pin for at least two machine cycles will reset the device.
		T0	External input of Timer/Counter 0
		$\overline{\text{INT2}}$	External interrupt 2, which only can be generated on falling edge. $\overline{\text{INT2}}$ supports power-down waking-up
		MCLKO	Master clock output; the output frequency can be MCLK/1, MCLK/2 and MCLK/4. The master clock can either be internal R/C clock or the external input clock or the external crystal oscillator.
P3.5/T0CLKO/ $\overline{\text{INT3}}$	3	P3.5	common I/O port PORT3[5]
		T0CLKO	T0 Clock Output The pin can be configured for T0CLKO by setting INT_CLKO[0] bit /T0CLKO
		$\overline{\text{INT3}}$	External interrupt 3, which only can be generated on falling edge. $\overline{\text{INT3}}$ supports power-down waking-up
Vcc	2	The positive pole of power	
Gnd	4	The negative pole of power, Gound	

STC MCU Limited.

1.4 General Overview of STC15W201S series MCU

1.4.1 Introduction of STC15W201S series MCU (In abundant supply)

STC15W201S series MCU is a single-chip microcontroller based on a high performance 1T architecture 8051 CPU, which is produced by STC MCU Limited. It is a new generation of 8051 MCU of high speed, high stability, wide voltage range, low power consumption and super strong anti-disturbance. Besides, STC15W201S series MCU is a MCU of super advanced encryption, because it adopts the ninth generation of STC encryption technology. With the enhanced kernel, STC15W201S series MCU is faster than a traditional 8051 in executing instructions (about 8~12 times the rate of a traditional 8051 MCU), and has a fully compatible instruction set with traditional 8051 series microcontroller. External expensive crystal can be removed by being integrated internal high-precise R/C clock(±0.3%) with ±1% temperature drift (-40℃~+85℃) while ±0.6% in normal temperature (-20℃~+65℃) and wide frenquency adjustable between 5MHz and 35MHz. External reset curcuit also can be removed by being integrated internal highly reliable one with 16 levels optional threshold voltage of reset. The STC15W201S series MCU includes a high-speed asynchronous serial port----UART(can be regarded as 2 serial ports by shifting among 2 groups of pins), comparator and so on. STC15W201S series MCU is usually used in serial communication or electrical control or some occasion with strong disturbance.

In Keil C development environment, select the Intel 8052 to compiling and only contain < reg51.h > as header file.

STC15 series MCU with super high-speed CPU core of STC-Y5 works 20% faster than STC early 1T series (such as STC12/STC11/STC10 series) at same clock frequency.

STC MCU Limited.

- Enhanced 8051 Central Processing Unit, 1T, single clock per machine cycle, faster 8~12 times than the rate of a traditional 8051.
- Operating voltage range: 5.5V ~ 2.4V.
- On-chip 1K/2K/3K/4K/5K/7.5K FLASH program memory with flexible ISP/IAP capability, can be repeatedly erased more than 100 thousand times.
- on-chip 256 bytes SRAM
- On-chip EEPROM with large capacity can be repeatedly erased more than 100 thousand times.
- ISP/IAP, In-System-Programming and In-Application-Programming , no need for programmer and emulator.
- Internal hghly reliable Reset with 16 levels optional threshold voltage of reset, external reset curcuit can be completely removed
- Internal high- precise R/C clock(±0.3%) with ±1% temperature drift (-40℃~+85℃) while ±0.6% (-20℃~+65℃) in normal temperature and wide frenquency adjustable between 5MHz and 35MHz (5.5296MHz / 11.0592MHz / 22.1184MHz / 33.1776MHz).
- Operating frequency range: 0- 35MHz, is equivalent to traditional 8051:0~420MHz.
- No need external crystal and reset, and can output clock and low reset signal from MCU.
- A high-speed asynchronous serial ports----UART (can be regarded as 2 serial ports by shifting among 2 groups of pins): UART1(RxD/P3.0, TxD/P3.1) can be switched to (RxD_2/P3.6, TxD_2/P3.7).
- Support the function of Encryption Download (to protect your code from being intercepted).
- Support the function of RS485 Control
- Code protection for flash memory access, excellent noise immunity, very low power consumption

- Power management mode: Slow-Down mode, Idle mode(all interrupt can wake up Idle mode), Stop/Power-Down mode.
- Timers which can wake up stop/power-down mode: have internal low-power special wake-up Timer.
- Resource which can wake up stop/power-down mode are: INT0/P3.2, INT1/P3.3 (INT0/INT1, may be generated on both rising and falling edges), $\overline{\text{INT2}}$/P3.6, $\overline{\text{INT3}}$/P3.7, $\overline{\text{INT4}}$/P3.0 ($\overline{\text{INT2}}$/$\overline{\text{INT3}}$/$\overline{\text{INT4}}$, only be generated on falling edge); pins T0/T2(their falling edge can wake up if T0/T2 have been enabled before power-down mode, but no interrupts can be generatetd); internal low-power special wake-up Timer.
- Two Timers/Counters----T0(are compatible with Timer0 of traditional 8051) and T2, T0/T2 all can independently achieve external programmable clock output
- Programmable clock output function(output by dividing the frequency of the internal system clock or the input clock of external pin):
  The speed of external programmable clock output of 5V MCU is also not more than 13.5MHz, because the output speed of I/O port of STC15 series 5V MCU is not more than 13.5MHz.
  The speed of external programmable clock output of 3.3V MCU is also not more than 8MHz, because the output speed of I/O port of STC15 series 3.3V MCU is not more than 8MHz.
  ① The Programmable clock output of T0 is on P3.5/T0CLKO (output by dividing the frequency of the internal system clock or the input clock of external pin T0/P3.4)
  ② The Programmable clock output of T2 is on P3.0/T2CLKO (output by dividing the frequency of the internal system clock or the input clock of external pin T2/P3.1)
  Two timers/counters in above all can be output by dividing the frequency from 1 to 65536.
  ③ The Programmable clock output of master clock is on P5.4/MCLKO, and its frequency can be divided into MCLK/1, MCLK/2, MCLK/4.
  The master clock can either be internal R/C clock or the external input clock or the external crystal oscillator.
  MCLK is the frequency of master clock. MCLKO is the output of master clock.
  It is on MCLKO/P3.4 that the Programmable clock output of master clock of STC15 series 8-pin MCU (such as STC15F101W series). However, it is on MCLKO/P5.4 that the Programmable clock output of master clock of other STC15 series MCU including 16-pin or more than 16-pin MCU(such as STC15F2K60S2, STC15W4K32S4 and so on)
- Comparator, which support comparing by external pin CMP+ and CMP- or internal reference voltage and generating output signal (its polarity can be configured) on CMPO pin can be used as 1 channel ADC or brownout detect function.
- One 15 bits Watch-Dog-Timer with 8-bit pre-scaler (one-time-enabled)
- advanced instruction set, which is fully compatible with traditional 8051 MCU, have hardware multiplication / division command.
- 14/6 common I/O ports are available, their mode is quasi_bidirectional/weak pull-up (traditional 8051 I/O ports mode) after reset, and can be set to four modes: quasi_bidirectional/weak pull-up, strong push-pull/

STC MCU Limited.

strong pull-up, input-only/high-impedance and open drain.

the driving ability of each I/O port can be up to 20mA, but the current of the whole chip don't exceed this maximum 90mA.

If I/O ports are not enough, it can be extended by connecting a 74HC595(reference price: RMB 0.15 yuan). Besides, cascading several chips also can extend to dozens of I/O ports.

- Package: SOP-8, DIP-8, SOP-16(6mm x 9mm), DIP-16.
- All products are baked 8 hours in high-temperature 175℃ after be packaged, Manufacture guarantee good quality.
- In Keil C development environment, select the Intel 8052 to compiling and only contain < reg51.h > as header file.

1.4.2 Block diagram of STC15W201S series

The internal structure of STC15W201S series MCU is shown in the block diagram below. STC15W201S series MCU includes central processor unit(CPU), program memory (Flash), data memory(SRAM), Timers/Counters, power-down wake-up Timer, I/O ports, high-speed asynchronous serial communication port---UART, Comparator, Watchdog, internal high- precise R/C clock, internal hghly reliable Reset and so on.

STC MCU Limited.

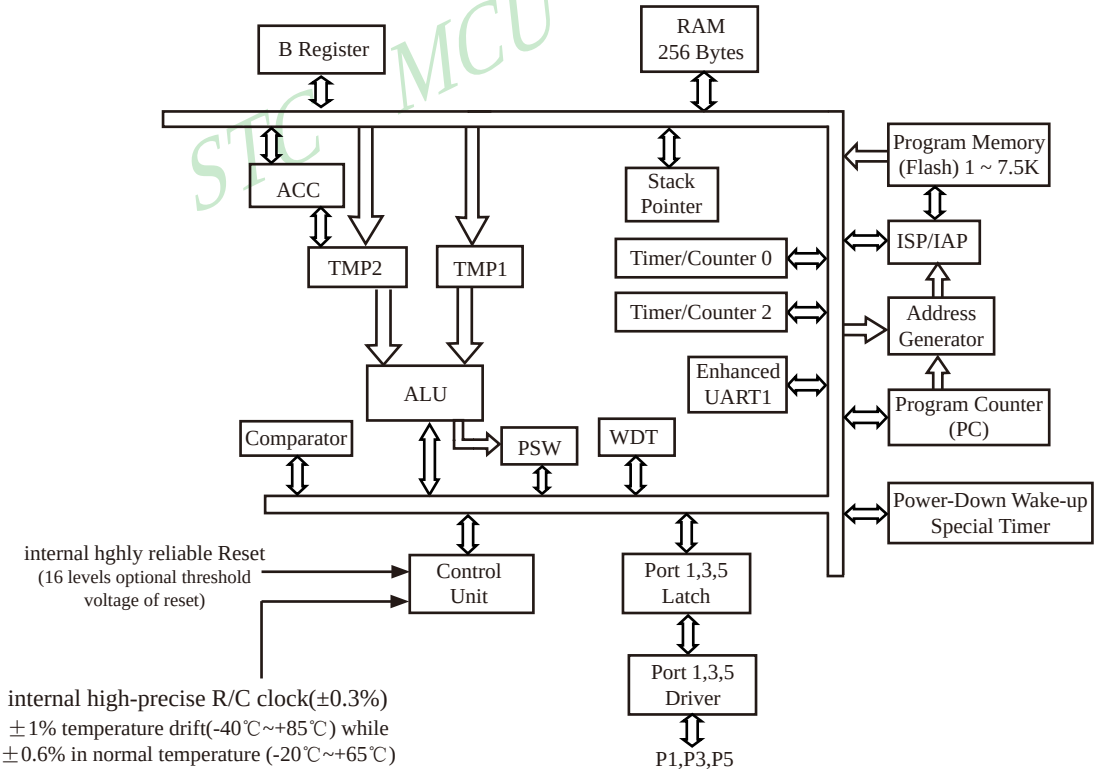

STC15W201S series Block Diagram

1.4.3 Pin Configurations of STC15W201S series MCU

All packages meet EU RoHS standards

The speed of external programmable clock output of 5V MCU is also not more than 13.5MHz, because the output speed of I/O port of STC15 series 5V MCU is not more than 13.5MHz.

The speed of external programmable clock output of 3.3V MCU is also not more than 8MHz, because the output speed of I/O port of STC15 series 3.3V MCU is not more than 8MHz.

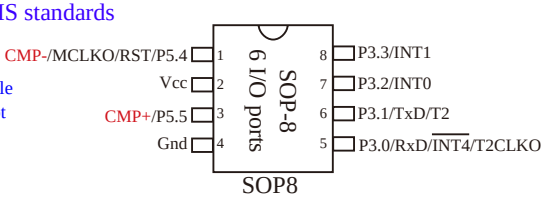

SOP8

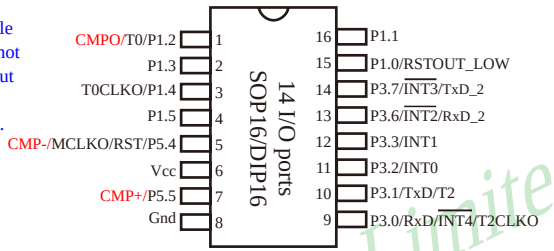

SOP16/DIP16

Recommend UART1 on [P3.6/RxD_2, P3.7/TxD_2]

T0CLKO refers to the programmable clock output of Timer/Counter 0
(output by dividing the frequency of the internal system clock or the input clock of external pin T0/P3.4);

T2CLKO refers to the programmable clock output of Timer/Counter 2
(output by dividing the frequency of the internal system clock or the input clock of external pin T2/P3.1);

In addition to programmable output on the internal system clock, T0CLKO/T2CLKO also can be used as divider by dividing the frequency of the internal system clock or the input clock of external pin T0/T2.

MCLKO is the output of master clock whose frequency can be divided into MCLK/1, MCLK/2, MCLK/4
The master clock can either be internal R/C clock or the external input clock or the external crystal oscillator.
MCLK is the frequency of master clock.

Mnemonic	Add	Name	7	6	5	4	3	2	1	0	Reset Value
AUXR1 P_SW1	A2H	Auxiliary register 1	S1_S1	S1_S0	CCP_S1	CCP_S0	SPI_S1	SPI_S0	0	DPS	01xx,xx0x
CLK_DIV (PCON2)	97H	Clock Division register	MCKO_S1	MCKO_S0	ADRJ	Tx_Rx	Tx2_Rx2	CLKS2	CLKS1	CLKS0	00x0,x000

UART1/S1 can be switched in 2 groups of pins by selecting the control bits S1_S0.	
S1_S0	UART1/S1 can be switched between P1 and P3
0	UART1/S1 on [P3.0/RxD,P3.1/TxD]
1	UART1/S1 on [P3.6/RxD_2,P3.7/TxD_2]

Recommed UART1 on [P3.6/RxD_2, P3.7/TxD_2].

Mnemonic	Add	Name	7	6	5	4	3	2	1	0	Reset Value
CLK_DIV (PCON2)	97H	Clock Division register	MCKO_S1	MCKO_S0	ADRJ	Tx_Rx	Tx2_Rx2	CLKS2	CLKS1	CLKS0	00x0,x000

MCKO_S1	MCKO_S0	the control bit of master clock output by dividing the frequency (The master clock can either be internal R/C clock or the external input clock or the external crystal oscillator)
0	0	Master clock do not output external clock
0	1	Master clock output external clock，but its frequency do not be divided，and the output clock frequency = MCLK / 1
1	0	Master clock output external clock，but its frequency is divided by 2，and the output clock frequency = MCLK / 2
1	1	Master clock output external clock，but its frequency is divided by 4，and the output clock frequency = MCLK / 4

The master clock can either be internal R/C clock or the external input clock or the external crystal oscillator.
MCLK is the frequency of master clock.
STC15204SW series MCU output master clock on MCLKO/P5.4
It is on MCLKO/P3.4 that the Programmable clock output of master clock of STC15 series 8-pin MCU (such as STC15F101W series). However, it is on MCLKO/P5.4 that the Programmable clock output of master clock of other STC15 series MCU including 16-pin or more than 16-pin MCU.

Tx_Rx：the set bit of relay and broadcast mode of UART1

0：UART1 works on normal mode

1：UART1 works on relay and broadcast mode，that to say output the input level state of RxD port to the outside TxD pin in real time, namely the external output of TxD pin can reflect the input level state of RxD port.

the RxD and TxD of UART1 can be switched in 3 groups of pins: [RxD/P3.0, TxD/P3.1];
[RxD_2/P3.6, TxD_2/P3.7];
[RxD_3/P1.6, TxD_3/P1.7].

STC MCU Limited

CLKS2	CLKS1	CLKS0	the control bit of system clock (System clock refers to the master clock that has been divided frequency, which is offered to CPU and Timers)
0	0	0	Master clock frequency/1, No division
0	0	1	Master clock frequency/2
0	1	0	Master clock frequency/4
0	1	1	Master clock frequency/8
1	0	0	Master clock frequency/16
1	0	1	Master clock frequency/32
1	1	0	Master clock frequency/64
1	1	1	Master clock frequency/128

The master clock can either be internal R/C clock or the external input clock or the external crystal oscillator.

1.4.4 STC15W201S series Selection and Price Table

Type 1T 8051 MCU	Operating Voltage (V)	Flash (byte)	SRAM (byte)	UART	SPI	common Timers T0/T2	CCP PCA PWM	Speical Power-down Wake-up Timer	Standard External Interrupts	A/D 8-channel	COMPARATOR	DPTR	EEPROM	Internal Low-Voltage Detection Interrupt	WDT	Internal High-reliable Reset (with optional threshold voltage)	Internal High-Precise Clock	Output clock and reset signal from MCU	Encryption Download (to protect your code from being intercepted)	RS485 Control	All Packages SOP8 SOP16/DIP16 Price of packages (RMB ¥)		
																					SOP8	SOP16	DIP16
STC15W201S series MCU Selection and Price Table																							
STC15W201S	2.5-5.5	1K	256	1	-	2	-	Y	5	-	Y	1	4K	Y	Y	16-level	Y	Y	Y	Y	¥1.15	¥1.2	¥1.35
STC15W202S	2.5-5.5	2K	256	1	-	2	-	Y	5	-	Y	1	3K	Y	Y	16-level	Y	Y	Y	Y	¥1.25	¥1.3	¥1.45
STC15W203S	2.5-5.5	3K	256	1	-	2	-	Y	5	-	Y	1	2K	Y	Y	8-level	Y	Y	Y	Y	¥1.35	¥1.4	¥1.55
STC15W204S	2.5-5.5	4K	256	1	-	2	-	Y	5	-	Y	1	1K	Y	Y	16-level	Y	Y	Y	Y	¥1.35	¥1.4	¥1.55
IAP15W205S	2.5-5.5	5K	256	1	-	2	-	Y	5	-	Y	1	IAP	Y	Y	16-level	Y	Y	Y	Y	¥1.35	¥1.4	¥1.55
																					The program Flash in user program area can be used as EEPROM.		
IRC15W207S (Fixed internal 24MHz clock)	2.5-5.5	7.5K	256	1	-	2	-	Y	5	-	Y	1	IAP	Y	Y	Fixed	Y	Y	N	N	¥1.35	¥1.4	¥1.55
																					The program Flash in user program area can be used as EEPROM.		

Encryption Download : please burn source code with encryption key onto MCU in the factory. Then, you can make a simple update software just with one "update" button by fisrtly using the fuction "encrytion download" and then "release project" to update yourself code unabled to be intercepted when you need to upgrade your code.

To provide customized IC services

Because the last 7 bytes of the program area is stored mandatorily the contents of only global ID, the program space the user can actually use is 7 bytes smaller than the space shown in the selection table.

Conclusion: STC15W201S series MCU have: Two16-bit relaodable Timers/Counters that are Timer/Counter 0 and Timer/Counter 2; special power-down wake-up timer; 5 external interrupts INT0/INT1/$\overline{\text{INT2}}$/$\overline{\text{INT3}}$/$\overline{\text{INT4}}$; a high-speed asynchronous serial port ---- UART; 1 Comparator; 1 data pointers ---- DPTR.

STC MCU Limited.

1.4.5 Naming rules of STC15W201S series MCU

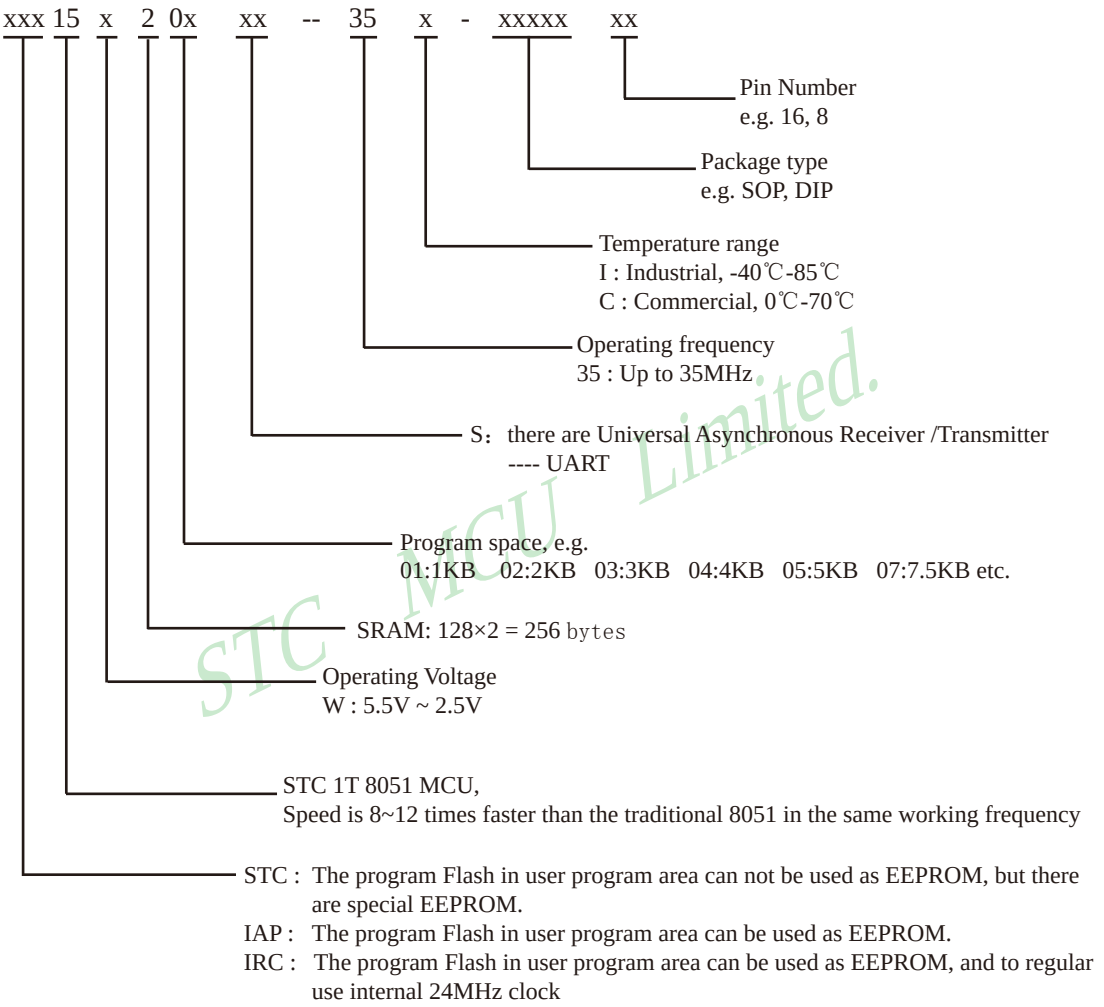

STC MCU Limited.

1.4.6 Application Circuit Diagram for ISP of STC15W201S series MCU

1.4.6.1 Application Circuit Diagram for ISP using RS-232 Converter

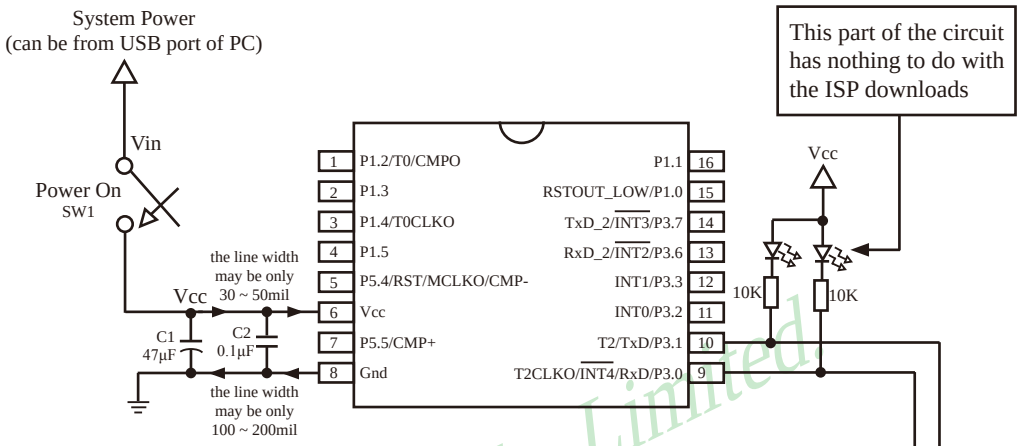

Circuit diagram for ISP of *STC MCU*, *STC* RS-232 Converter

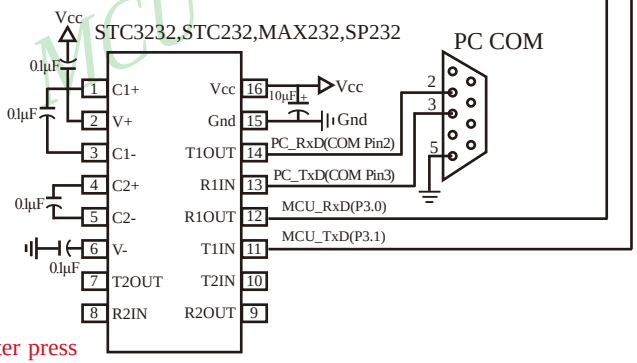

Please power on the target MCU after press down the button "Download/Program" on STC-ISP.exe when burning code to MCU.

Internal hghly reliable Reset, External reset circuit can be completely removed.

P5.4/RST/MCLKO pin factory defaults to the I/O port, which can be set as RST reset pin(active high) through the STC-ISP programmer.

Internal high-precise R/C clock(±3%), ±1% temperature drift (-40℃~+85℃) while ±0.6% in normal temperature (-20℃~+65℃). External expensive crysal can be completely removed.

Recommend to add decoupling capacitor C1(47μF) and C2(0.1μF) between Vcc and Gnd that can remove power noise and improve the anti-interference ability.

1.4.6.2 Application Circuit Diagram for ISP using USB Chip PL-2303SA to convert Serial Port

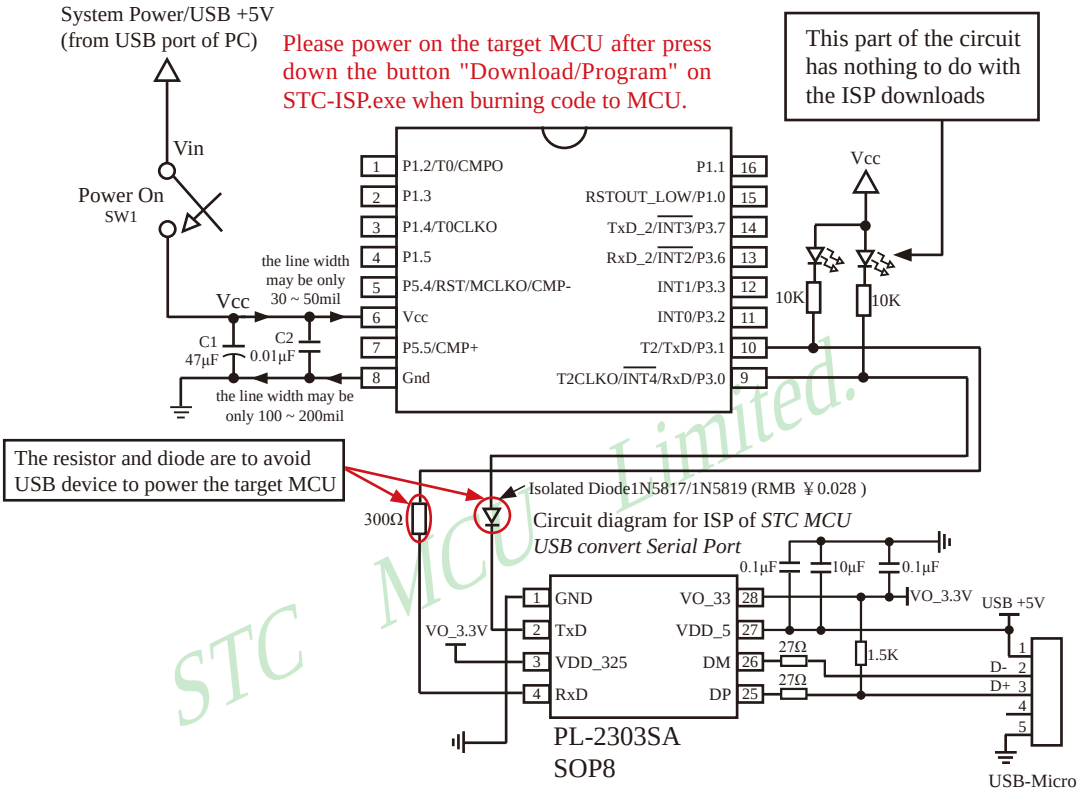

Internal hghly reliable Reset, External reset circuit can be completely removed.

P5.4/RST/MCLKO pin factory defaults to the I/O port, which can be set as RST reset pin(active high) through the STC-ISP programmer.

Internal high-precise R/C clock(±3%), ±1% temperature drift (-40℃~+85℃) while ±0.6% in normal temperature (-20℃~+65℃). External expensive crysal can be completely removed.

Recommend to add decoupling capacitor C1(47μF) and C2(0.1μF) between Vcc and Gnd that can remove power noise and improve the anti-interference ability.

1.4.6.3 Application Circuit Diagram for ISP using USB Chip PL-2303HXD / PL-2303HX to convert Serial Port

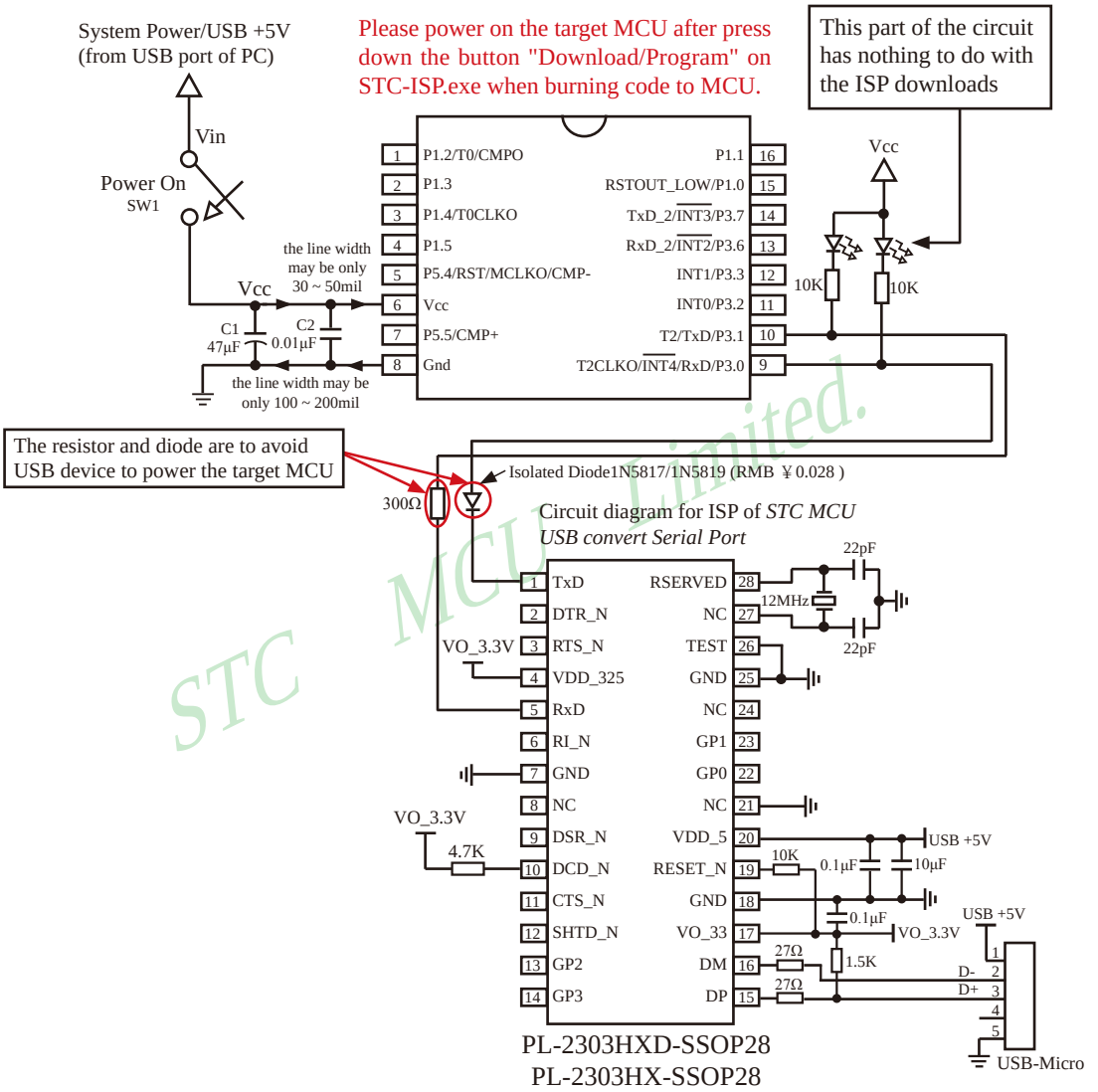

Internal hghly reliable Reset, External reset circuit can be completely removed.

P5.4/RST/MCLKO pin factory defaults to the I/O port, which can be set as RST reset pin(active high) through the STC-ISP programmer.

Internal high-precise R/C clock(±3%), ±1% temperature drift (-40℃~+85℃) while ±0.6% in normal temperature (-20℃~+65℃). External expensive crysal can be completely removed.

Recommend to add decoupling capacitor C1(47μF) and C2(0.1μF) between Vcc and Gnd that can remove power noise and improve the anti-interference ability.

1.4.7 Pin Descriptions of STC15W201S series MCU

MNEMONIC	Pin Number		DESCRIPTION	
	SOP8	SOP16/ DIP16		
P1.0/ RSTOUT_LOW		15	P1.0	common I/O port PORT1[0]
			RSTOUT_LOW	the pin output low after power-on and during reset, which can be set to output high by software
P1.1		16	common I/O port PORT1[1]	
P1.2/T0/CMPO		1	P1.2	common I/O port PORT1[2]
			T0	External input of Timer/Counter 0
			CMPO	The output port of reslut compared by comparator
P1.3		2	common I/O port PORT1[3]	
P1.4/T0CLKO		3	P1.4	common I/O port PORT1[5]
			T0CLKO	T0 Clock Output The pin can be configured for T0CLKO by setting INT_CLKO[0] bit /T0CLKO
P1.5		4	common I/O port PORT1[5]	
P3.0/RxD/$\overline{INT4}$ /T2CLKO	5	9	P3.0	common I/O port PORT3[0]
			RxD	Receive Data Port of UART
			$\overline{INT4}$	External interrupt 4, which only can be generated on falling edge. $\overline{INT4}$ supports power-down waking-up
			T2CLKO	T2 Clock Output The pin can be configured for T2CLKO by setting INT_CLKO[2] bit /T2CLKO
P3.1/TxD/T2	6	10	P3.1	common I/O port PORT3[1]
			TxD	Transit Data Port of UART
			T2	External input of Timer/Counter 2
P3.2/INT0	7	11	P3.2	common I/O port PORT3[2]
			INT0	External interrupt 0, which both can be generated on rising and falling edge. INT0 only can generate interrupt on falling edge if IT0 (TCON.0) is set to 1. And, INT0 both can generate interrupt on rising and falling edge if IT0 (TCON.0) is set to 0.
P3.3/INT1	8	12	P3.3	common I/O port PORT3[3]
			INT1	External interrupt 1, which both can be generated on rising and falling edge. INT1 only can generate interrupt on falling edge if IT1 (TCON.2) is set to 1. And, INT1 both can generate interrupt on rising and falling edge if IT1 (TCON.2) is set to 0. INT1 supports power-down waking-up
P3.6/$\overline{INT2}$/RxD_2		13	P3.6	common I/O port PORT3[6]
			$\overline{INT2}$	External interrupt 2, which only can be generated on falling edge. $\overline{INT2}$ supports power-down waking-up
			RxD_2	Receive Data Port of UART
P3.7/$\overline{INT3}$/TxD_2		14	P3.7	common I/O port PORT3[7]
			$\overline{INT3}$	External interrupt 3, which only can be generated on falling edge. $\overline{INT3}$ supports power-down waking-up
			TxD_2	Transit Data Port of UART

STC MCU Limited

MNEMONIC	Pin Number		DESCRIPTION	
	SOP8	SOP16/ DIP16		
P5.4/RST/ MCLKO/CMP-	1	5	P5.4	common I/O port PORT5[4]
			RST	Reset pin. A high on this pin for at least two machine cycles will reset the device.
			MCLKO	Master clock output; the output frequency can be MCLK/1, MCLK/2 and MCLK/4. The master clock can either be internal R/C clock or the external input clock or the external crystal oscillator.
			CMP-	Comparator negative input
P5.5/CMP+	3	7	P5.5	common I/O port PORT5[5]
			CMP+	Comparator positive input
Vcc	2	6	The positive pole of power	
Gnd	4	8	The negative pole of power, Gound	

STC MCU Limited.

1.5 General Overview of STC15W401AS series MCU

1.5.1 Introduction of STC15W401AS series MCU (In abundant supply)

STC15W401AS series MCU is a single-chip microcontroller based on a high performance 1T architecture 8051 CPU, which is produced by STC MCU Limited. It is a new generation of 8051 MCU of high speed, high stability, wide voltage range, low power consumption and super strong anti-disturbance. Besides, STC15W401AS series MCU is a MCU of super advanced encryption, because it adopts the ninth generation of STC encryption technology. With the enhanced kernel, STC15W401AS series MCU is faster than a traditional 8051 in executing instructions (about 8~12 times the rate of a traditional 8051 MCU), and has a fully compatible instruction set with traditional 8051 series microcontroller. External expensive crystal can be removed by being integrated internal high-precise R/C clock(±0.3%) with ±1% temperature drift (-40℃~+85℃) while ±0.6% in normal temperature (-20℃~+65℃) and wide frenquency adjustable between 5MHz and 35MHz. External reset curcuit also can be removed by being integrated internal highly reliable one with 16 levels optional threshold voltage of reset. The STC15W401AS series MCU retains all features of the traditional 8051. In addition, it has 3-channels CCP/PCA/PWM, 8-channels and 10-bits A/D Converter(300 thousand times per sec.), a high-speed asynchronous serial port----UART(can be regarded as 3 serial ports by shifting among 3 groups of pins) and a high-speed synchronous serial peripheral interface----SPI. STC15W401AS series MCU is usually used in communications which need for serveral UARTs or electrical control or some occasion with strong disturbance.

In Keil C development environment, select the Intel 8052 to compiling and only contain < reg51.h > as header file.

STC15 series MCU with super high-speed CPU core of STC-Y5 works 20% faster than STC early 1T series (such as STC12/STC11/STC10 series) at same clock frequency.

STC MCU Limited.

- Enhanced 8051 Central Processing Unit, 1T, single clock per machine cycle, faster 8~12 times than the rate of a traditional 8051.
- Operating voltage range: 5.5V ~ 2.4V.
- On-chip 4K/8K/10K/12K/13K/15.5K FLASH program memory with flexible ISP/IAP capability, can be repeatedly erased more than 100 thousand times.
- on-chip 512 bytes SRAM: 256 byte scratch-pad RAM and 256 bytes of auxiliary RAM
- On-chip EEPROM with large capacity can be repeatedly erased more than 100 thousand times.
- ISP/IAP, In-System-Programming and In-Application-Programming , no need for programmer and emulator.
- 8 channels and 10 bits Analog-to-Digital Converter (ADC), the speed up to 300 thousand times per second, 3 channels PWM also can be used as 3 channels D/A Converter(DAC).
- 3 channels Capture/Compare uints(CCP/PCA/PWM)
  ---- can be used as 3 Times or 3 external Interrupts(can be generated on rising or falling edge) or 3 channels D/A Converter.
- The high-speed pulse function of CCP/PCA can be utilized to to realize 3 channels 9 ~ 16 bit PWM (each channel of which takes less than 0.6% system time)
- The clock output function of T0, T1 or T2 can be utilized to realize 8 ~ 16 bit PWM with a high degree of accuracy (which takes less than 0.4% system time)
- Internal hghly reliable Reset with 16 levels optional threshold voltage of reset, external reset curcuit can be completely removed

- Internal high- precise R/C clock(±0.3%) with ±1% temperature drift (-40℃~+85℃) while ±0.6% (-20℃~+65℃) in normal temperature and wide frenquency adjustable between 5MHz and 35MHz (5.5296MHz / 11.0592MHz / 22.1184MHz / 33.1776MHz)
- No need external crystal and reset, and can output clock and low reset signal from MCU.
- Operating frequency range: 0- 35MHz, is equivalent to traditional 8051:0~420MHz.
- A high-speed asynchronous serial port----UART (can be regarded as 3 serial ports by shifting among 3 groups of pins):
  UART(RxD/P3.0, TxD/P3.1) can be switched to (RxD_2/P3.6, TxD_2/P3.7),
  also can be switched to (RxD_3/P1.6, TxD_3/P1.7).
- A high-speed synchronous serial peripheral interface----SPI.
- Support the function of Encryption Download (to protect your code from being intercepted).
- Support the function of RS485 Control
- Code protection for flash memory access, excellent noise immunity, very low power consumption
- Power management mode: Slow-Down mode, Idle mode(all interrupt can wake up Idle mode), Stop/Power-Down mode.
- Timers which can wake up stop/power-down mode: have internal low-power special wake-up Timer.
- Resource which can wake up stop/power-down mode are: INT0/P3.2, INT1/P3.3 (INT0/INT1, may be generated on both rising and falling edges), $\overline{\text{INT2}}$/P3.6, $\overline{\text{INT3}}$/P3.7, $\overline{\text{INT4}}$/P3.0 ($\overline{\text{INT2}}$/$\overline{\text{INT3}}$/$\overline{\text{INT4}}$, only be generated on falling edge); pins CCP0/CCP1/CCP2; pins RxD; pins T0/T2(their falling edge can wake up if T0/T2 have been enabled before power-down mode, but no interrupts can be generatetd); internal low-power special wake-up Timer.
- Five Timers/Counters, two 16-bit reloadable Timer/Counter(T0/T2, T0 is compatible with Timer0 of traditional 8051), T0/T2 all can independently achieve external programmable clock output, 3 channels CCP/PWM/PCA also can be used as three timers.
- Programmable clock output function(output by dividing the frequency of the internal system clock or the input clock of external pin):
  The speed of external programmable clock output of 5V MCU is also not more than 13.5MHz, because the output speed of I/O port of STC15 series 5V MCU is not more than 13.5MHz.
  The speed of external programmable clock output of 3.3V MCU is also not more than 8MHz, because the output speed of I/O port of STC15 series 3.3V MCU is not more than 8MHz.
  ① The Programmable clock output of T0 is on P3.5/T0CLKO (output by dividing the frequency of the internal system clock or the input clock of external pin T0/P3.4)
  ② The Programmable clock output of T2 is on P3.0/T2CLKO (output by dividing the frequency of the internal system clock or the input clock of external pin T2/P3.1)
  Two timers/counters in above all can be output by dividing the frequency from 1 to 65536.
  ③ The Programmable clock output of master clock is on P5.4/SysClkO, and its frequency can be divided into SysClk/1, SysClk/2, SysClk/4.

STC MCU Limited.

The master clock can either be internal R/C clock or the external input clock or the external crystal oscillator.

SysClk is the frequency of master clock. SysClkO is the output of master clock.

- Comparator, which support comparing by external pin CMP+ and CMP- or internal reference voltage and generating output signal (its polarity can be configured) on CMPO pin can be used as 1 channel ADC or brownout detect function.
- One 15 bits Watch-Dog-Timer with 8-bit pre-scaler (one-time-enabled)
- advanced instruction set, which is fully compatible with traditional 8051 MCU, have hardware multiplication / division command.
- 26/18/14 common I/O ports are available, their mode is quasi_bidirectional/weak pull-up (traditional 8051 I/O ports mode) after reset, and can be set to four modes: quasi_bidirectional/weak pull-up, strong push-pull/ strong pull-up, input-only/high-impedance and open drain.
  the driving ability of each I/O port can be up to 20mA, but the current of the whole chip don't exceed this maximum 90mA.

  If I/O ports are not enough, it can be extended by connecting a 74HC595(reference price: RMB 0.15 yuan). Besides, cascading several chips also can extend to dozens of I/O ports.
- Package: SOP28, TSSOP28 (6.4mm x 9.7mm), QFN28 (5mm x 5mm), SKDIP28, SOP20, DIP20, TSSOP20(6.5mm x 6.5mm), SOP16, DIP16.
- All products are baked 8 hours in high-temperature 175℃ after be packaged, Manufacture guarantee good quality.
- In Keil C development environment, select the Intel 8052 to compiling and only contain < reg51.h > as header file.

STC MCU Limited.

1.5.2 Block diagram of STC15W401AS series

The internal structure of STC15W401AS series MCU is shown in the block diagram below. STC15W401AS series MCU includes central processor unit(CPU), program memory (Flash), data memory(SRAM), Timers/ Counters, power-down wake-up Timer, I/O ports, high-speed A/D converter(ADC), Comparator, Watchdog, high-speed asynchronous serial communication ports---UART, CCP/PWM/PCA, a group of high-speed synchronous serial peripheral interface (SPI), internal high- precise R/C clock, internal hghly reliable Reset and so on. STC15W401AS series MCU almost includes all of the modules required in data acquisition and control, and can be regarded as an on-chip system (SysTem Chip or SysTem on Chip, abbreviated as STC, this is the name origin of Hongjing technology STC Limited).

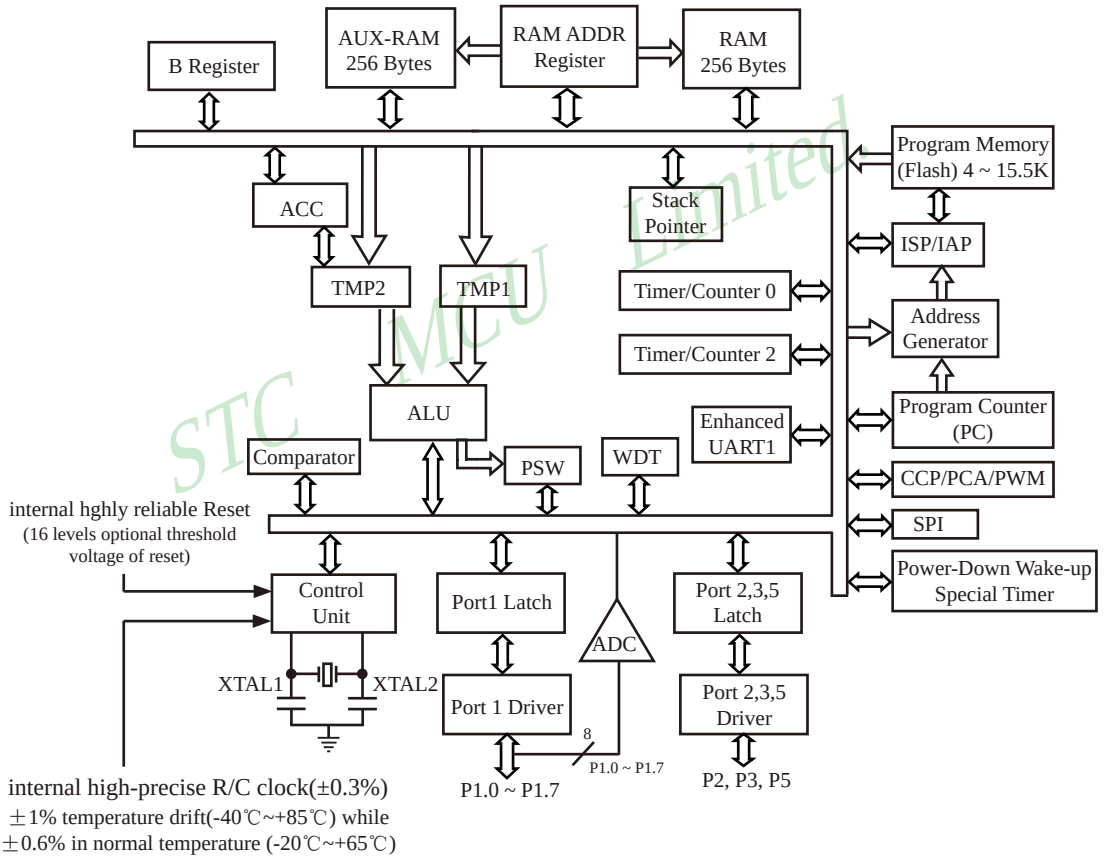

STC15W401AS series Block Diagram

1.5.3 Pin Configurations of STC15W401AS series MCU

All packages meet EU RoHS standards

CCP is abbreviation for Capture, Compare, PWM

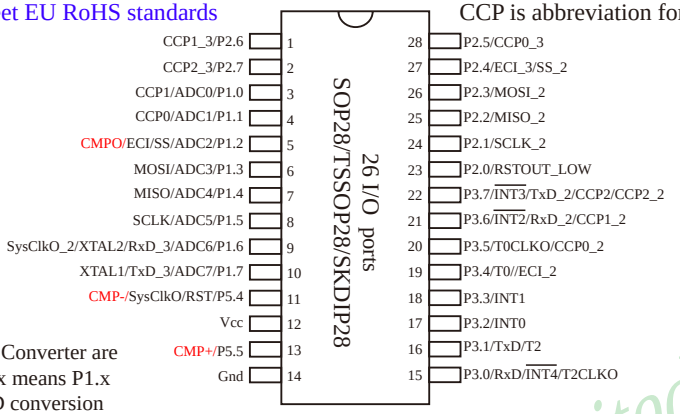

SOP28/SKDIP28

8 channels of A/D Converter are on P1. P1.x/ADCx means P1.x can be used as A/D conversion channel in the pin map.

SysClkO is the output of master clock whose frequency can be divided into SysClk/1, SysClk/2, SysClk/4

The master clock can either be internal R/C clock or the external input clock or the external crystal oscillator. SysClk is the frequency of master clock.

The speed of external programmable clock output of 5V MCU is also not more than 13.5MHz, because the output speed of I/O port of STC15 series 5V MCU is not more than 13.5MHz.

The speed of external programmable clock output of 3.3V MCU is also not more than 8MHz, because the output speed of I/O port of STC15 series 3.3V MCU is not more than 8MHz.

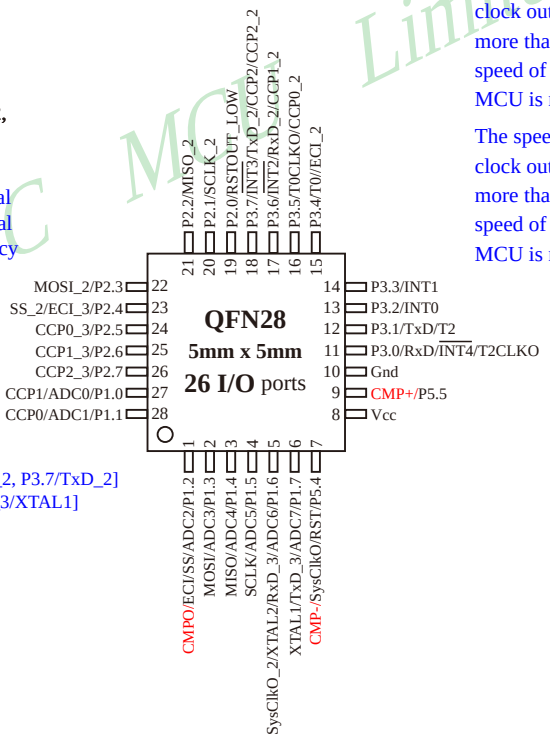

Recommend UART1 on [P3.6/RxD_2, P3.7/TxD_2] or [P1.6/RxD_3/XTAL2, P1.7/TxD_3/XTAL1]

T0CLKO refers to the programmable clock output of Timer/Counter 0
(output by dividing the frequency of the internal system clock or the input clock of external pin T0/P3.4);

T2CLKO refers to the programmable clock output of Timer/Counter 2
(output by dividing the frequency of the internal system clock or the input clock of external pin T2/P3.1);

In addition to programmable output on the internal system clock, T0CLKO/T2CLKO also can be used as divider by dividing the frequency of the internal system clock or the input clock of external pin T0/T2.

STC MCU Limited.

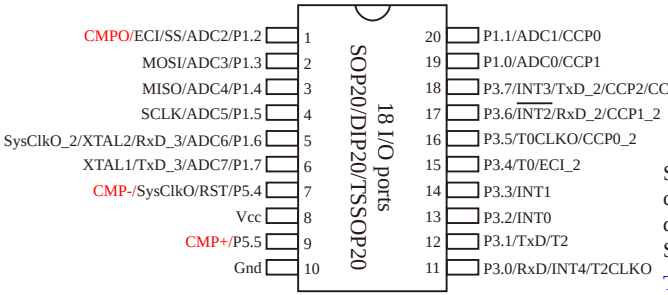

SOP20/DIP20/TSSOP20

SysClkO is the output of master clock whose frequency can be divided into SysClk/**1, SysClk/2,** SysClk/4

The master clock can either be internal R/C clock or the external input clock or the external crystal oscillator. SysClk is the frequency of master clock.

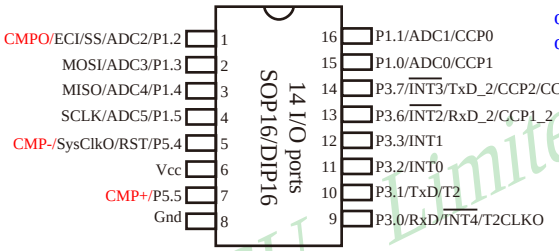

SOP16/DIP16

Recommend UART1 on [P3.6/RxD_2, P3.7/TxD_2] or [P1.6/RxD_3/XTAL2, P1.7/TxD_3/XTAL1]

STC MCU Limited.

Mnemonic	Add	Name	7	6	5	4	3	2	1	0	Reset Value
AUXR1 P_SW1	A2H	Auxiliary register 1	S1_S1	S1_S0	CCP_S1	CCP_S0	SPI_S1	SPI_S0	0	DPS	00x0,x00x
CLK_DIV (PCON2)	97H	Clock Division register	MCKO_S1	MCKO_S0	ADRJ	Tx_Rx	MCLKO_2	CLKS2	CLKS1	CLKS0	0000,0000

UART1/S1 can be switched in 3 groups of pins by selecting the control bits S1_S0 and S1_S1.		
S1_S1	S1_S0	UART1/S1 can be switched between P1 and P3
0	0	UART1/S1 on [P3.0/RxD,P3.1/TxD]
0	1	UART1/S1 on [P3.6/RxD_2,P3.7/TxD_2]
1	0	UART1/S1 on [P1.6/RxD_3/XTAL2,P1.7/TxD_3/XTAL1] when UART1 is on P1, please using internal R/C clock.
1	1	Invalid

Recommed UART1 on [P3.6/RxD_2, P3.7/TxD_2] or [P1.6/RxD_3/XTAL2, P1.7/TxD_3/XTAL1].

CCP can be switched in 3 groups of pins by selecting the control bits CCP_S1 and CCP_S0.		
CCP_S1	CCP_S0	CCP can be switched in P1 and P3
0	0	CCP on [P1.2/ECI,P1.1/CCP0,P1.0/CCP1,P3.7/CCP2]
0	1	CCP on [P3.4/ECI_2,P3.5/CCP0_2,P3.6/CCP1_2,P3.7/CCP2_2]
1	0	CCP on [P2.4/ECI_3,P2.5/CCP0_3,P2.6/CCP1_3,P2.7/CCP2_3]
1	1	Invalid

Mnemonic	Add	Name	7	6	5	4	3	2	1	0	Reset Value
AUXR1 P_SW1	A2H	Auxiliary register 1	S1_S1	S1_S0	CCP_S1	CCP_S0	SPI_S1	SPI_S0	0	DPS	00x0,x00x
CLK_DIV (PCON2)	97H	Clock Division register	SysCKO_S1	SysCKO_S0	ADRJ	Tx_Rx	SysClkO_2	CLKS2	CLKS1	CLKS0	0000,0000

SPI can be switched in 2 groups of pins by selecting the control bit SPI_S0		
SPI_S1	SPI_S0	SPI can be switched in P1 and P2
0	0	SPI on [P1.2/SS,P1.3/MOSI,P1.4/MISO,P1.5/SCLK]
0	1	SPI on [P2.4/SS_2,P2.3/MOSI_2,P2.2/MISO_2,P2.1/SCLK_2]
1	0	SPI on [P5.4/SS_3,P4.0/MOSI_3,P4.1/MISO_3,P4.3/SCLK_3]
1	1	Invalid

SysCKO_S1	SysCKO_S0	the control bit of master clock output by dividing the frequency (The master clock can either be internal R/C clock or the external input clock or the external crystal oscillator)
0	0	Master clock do not output external clock
0	1	Master clock output external clock，but its frequency do not be divided，and the output clock frequency = SysClk / 1
1	0	Master clock output external clock，but its frequency is divided by 2，and the output clock frequency = SysClk / 2
1	1	Master clock output external clock，but its frequency is divided by 4，and the output clock frequency = SysClk / 4

The master clock can either be internal R/C clock or the external input clock or the external crystal oscillator. SysClk is the frequency of master clock.

STC15W401AS series MCU output master clock on SysClkO/P5.4

SysClkO_2：to select Master Clock output on where

0：Master Clock output on SysClkO/P5.4

1：Master Clock output on SysClkO_2/XTAL2/P1.6

The master clock can either be internal R/C clock or the external input clock or the external crystal oscillator.

ADRJ：the adjustment bit of ADC result

0：ADC_RES[7:0] store high 8-bit ADC result，ADC_RESL[1:0] store low 2-bit ADC result

1：ADC_RES[1:0] store high 2-bit ADC result，ADC_RESL[7:0] store low 8-bit ADC result

Tx_Rx：the set bit of relay and broadcast mode of UART1

0：UART1 works on normal mode

1：UART1 works on relay and broadcast mode，that to say output the input level state of RxD port to the outside TxD pin in real time, namely the external output of TxD pin can reflect the input level state of RxD port.

the RxD and TxD of UART1 can be switched in 3 groups of pins: [RxD/P3.0, TxD/P3.1];
[RxD_2/P3.6, TxD_2/P3.7];
[RxD_3/P1.6, TxD_3/P1.7].

STC MCU Limited.

Mnemonic	Add	Name	7	6	5	4	3	2	1	0	Reset Value
CLK_DIV (PCON2)	97H	Clock Division register	MCKO_S1	MCKO_S0	ADRJ	Tx_Rx	MCLKO_2	CLKS2	CLKS1	CLKS0	0000,0000

CLKS2	CLKS1	CLKS0	the control bit of system clock (System clock refers to the master clock that has been divided frequency, which is offered to CPU, UARTs, SPI, Timers, CCP/PWM/PCA and A/D Converter)
0	0	0	Master clock frequency/1, No division
0	0	1	Master clock frequency/2
0	1	0	Master clock frequency/4
0	1	1	Master clock frequency/8
1	0	0	Master clock frequency/16
1	0	1	Master clock frequency/32
1	1	0	Master clock frequency/64
1	1	1	Master clock frequency/128

The master clock can either be internal R/C clock or the external input clock or the external crystal oscillator.

STC MCU Limited

1.5.4 STC15W401AS series Selection and Price Table

Type 1T 8051 MCU	Operating Voltage (V)	Flash (byte)	SRAM (byte)	UART	SPI	common Timers T0/T2	CCP PCA PWM	Speical Power-down Wake-up Timer	Standard External Interrupts	A/D 8-channel	COMPARATOR	DPTR	EEPROM	Internal Low-Voltage Detection Interrupt	WDT	Internal High-reliable Reset (with optional threshold voltage)	Internal High-Precise Clock	Output clock and reset signal from MCU	Encryption Download (to protect your code from being intercepted)	RS485 Control	All Packages SOP28/TSSOP28/ SKDIP28/QFN28 SOP20 / DIP20 / TSSOP20 SOP16 / DIP16 Price of a part of packages(RMB ¥) SOP16	SOP20	SOP28
STC15W401AS series MCU Selection and Price Table Note: 3 channels CCP/PCA/PWM also can be used as 3 Timers.																							
STC15W401AS	2.4-5.5	1K	512	1	Y	2	3-ch	Y	5	10-bit	Y	1	5K	Y	Y	16-level	Y	Y	Y	Y	¥1.60	¥1.80	¥2.00
STC15W402AS	2.4-5.5	2K	512	1	Y	2	3-ch	Y	5	10-bit	Y	1	5K	Y	Y	16-level	Y	Y	Y	Y	¥1.80	¥2.00	¥2.20
STC15W404AS	2.5-5.5	4K	512	1	Y	2	3-ch	Y	5	10-bit	Y	1	9K	Y	Y	16-level	Y	Y	Y	Y	¥1.99	¥2.20	¥2.50
STC15W408AS	2.5-5.5	8K	512	1	Y	2	3-ch	Y	5	10-bit	Y	1	5K	Y	Y	16-level	Y	Y	Y	Y	¥2.20	¥2.40	¥2.70
IAP15W413AS	2.5-5.5	13K	512	1	Y	2	3-ch	Y	5	10-bit	Y	1	IAP	Y	Y	16-level	Y	Y	Y	Y	¥2.30	¥2.50	¥2.80
																					The program Flash in user program area can be used as EEPROM.		
IRC15W415AS (Using external crystal or internal 24MHz clock)	2.5-5.5	15.5K	512	1	Y	2	3-ch	Y	5	10-bit	Y	1	IAP	Y	Y	Fixed	Y	Y	N	N	¥2.30	¥2.50	¥2.80
																					The program Flash in user program area can be used as EEPROM.		

Encryption Download : please burn source code with encryption key onto MCU in the factory. Then, you can make a simple update software just with one "update" button by fisrtly using the fuction "encrytion download" and then "release project" to update yourself code unabled to be intercepted when you need to upgrade your code.

To provide customized IC services

Because the last 7 bytes of the program area is stored mandatorily the contents of only global ID, the program space the user can actually use is 7 bytes smaller than the space shown in the selection table.

Conclusion : STC15W401AS series MCU have: Two16-bit relaodable Timers/Counters that are Timer/Counter 0 and Timer/Counter 2; 3 channels CCP/PWM/PCA (can achieve 3 timers or 3 D/A converters again); special power-down wake-up timer; 5 external interrupts INT0/INT1/$\overline{\text{INT2}}$/$\overline{\text{INT3}}$/$\overline{\text{INT4}}$; a high-speed asynchronous serial port ---- UART; a high-speed synchronous serial peripheral interface ---- SPI; 8 channels and 10 bits high-speed A/D converter; 1 Comparator; 1 data pointers ---- DPTR.

1.5.5 STC15W401AS series Package and Price Table

Type 1T 8051 MCU	Operating Voltage (V)	Operating Frequency (MHz)	Operating Temprature (I — Industrial)	All Packages Price(RMB ¥) SOP28/ TSSOP28/ SKDIP28/ QFN28/ SOP20/ DIP20/ TSSOP20/ SOP16/ DIP16								
				SOP28	TSSOP28	SKDIP28	QFN28	SOP20	TSSOP20	DIP20	SOP16	DIP16
STC15W401AS series MCU Package and Price Table												
STC15W401AS	2.5-5.5	35	-40℃ ~ +85℃	¥2.00	¥2.10	¥2.20	¥2.20	¥1.80	¥1.90	¥2.00	¥1.60	¥1.80
STC15W402AS	2.5-5.5	35	-40℃ ~ +85℃	¥2.20	¥2.30	¥2.40	¥2.40	¥2.00	¥2.10	¥2.20	¥1.80	¥2.00
STC15W404AS	2.5-5.5	35	-40℃ ~ +85℃	¥2.50	¥2.60	¥2.70	¥2.70	¥2.20	¥2.30	¥2.40	¥1.99	¥2.20
STC15W401AS	2.5-5.5	35	-40℃ ~ +85℃	¥2.70	¥2.80	¥2.90	¥2.90	¥2.40	¥2.50	¥2.60	¥2.20	¥2.40
IAP15W413AS	2.5-5.5	35	-40℃ ~ +85℃	¥2.80	¥2.90	¥3.00	¥3.00	¥2.50	¥2.60	¥2.70	¥2.30	¥2.50
IRC15W415AS	2.5-5.5	35	-40℃ ~ +85℃	¥2.80	¥2.90	¥3.00	¥3.00	¥2.50	¥2.60	¥2.70	¥2.30	¥2.50

STC MCU Limited.

1.5.6 Naming rules of STC15W401AS series MCU

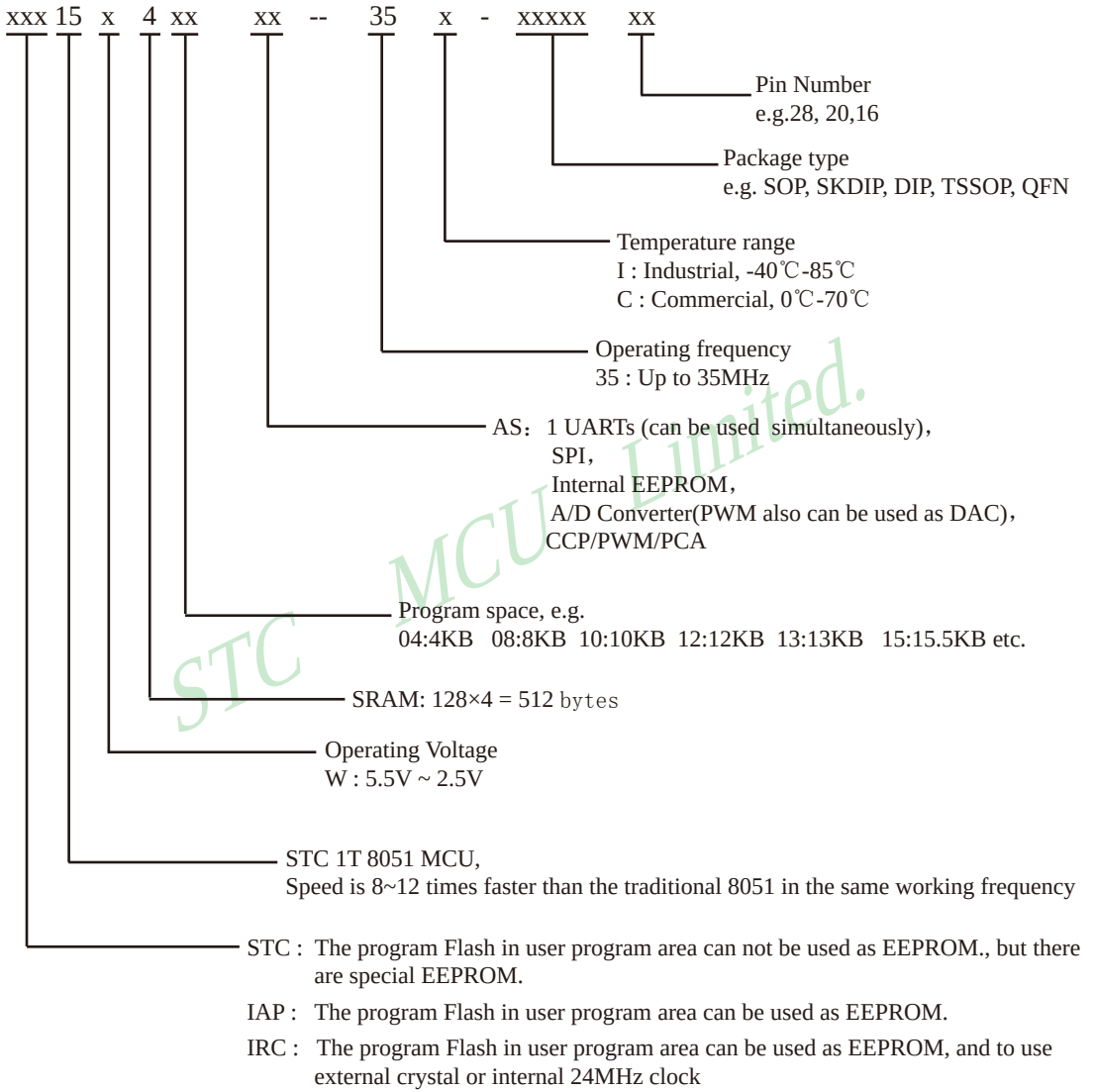

STC MCU Limited.

1.5.7 Application Circuit Diagram for ISP of STC15W401AS series MCU

1.5.7.1 Application Circuit Diagram for ISP using RS-232 Converter

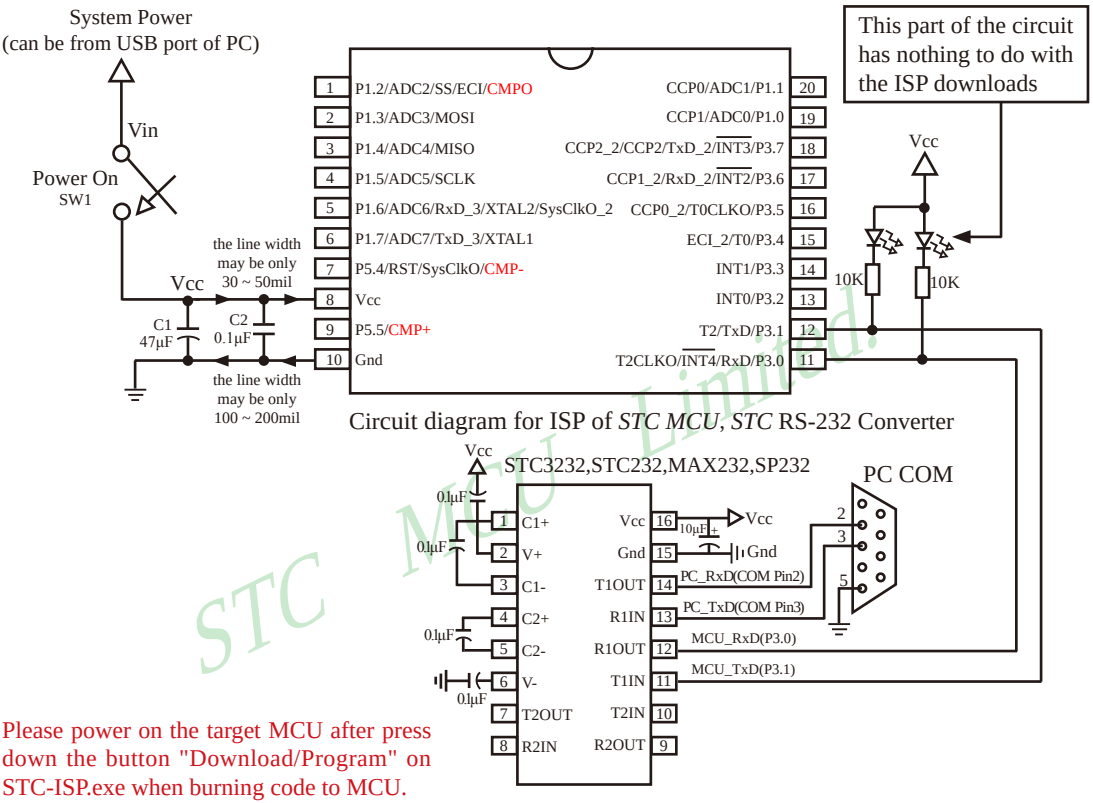

Please power on the target MCU after press down the button "Download/Program" on STC-ISP.exe when burning code to MCU.

Internal hghly reliable Reset, External reset circuit can be completely removed.

P5.4/RST/MCLKO pin factory defaults to the I/O port, which can be set as RST reset pin(active high) through the STC-ISP programmer.

Internal high-precise R/C clock(±3%), ±1% temperature drift (-40℃~+85℃) while ±0.6% in normal temperature (-20℃~+65℃). External expensive crysal can be completely removed.

Recommend to add decoupling capacitor C1(47μF) and C2(0.1μF) between Vcc and Gnd that can remove power noise and improve the anti-interference ability.

1.5.7.2 Application Circuit Diagram for ISP using USB Chip PL-2303SA to convert Serial Port

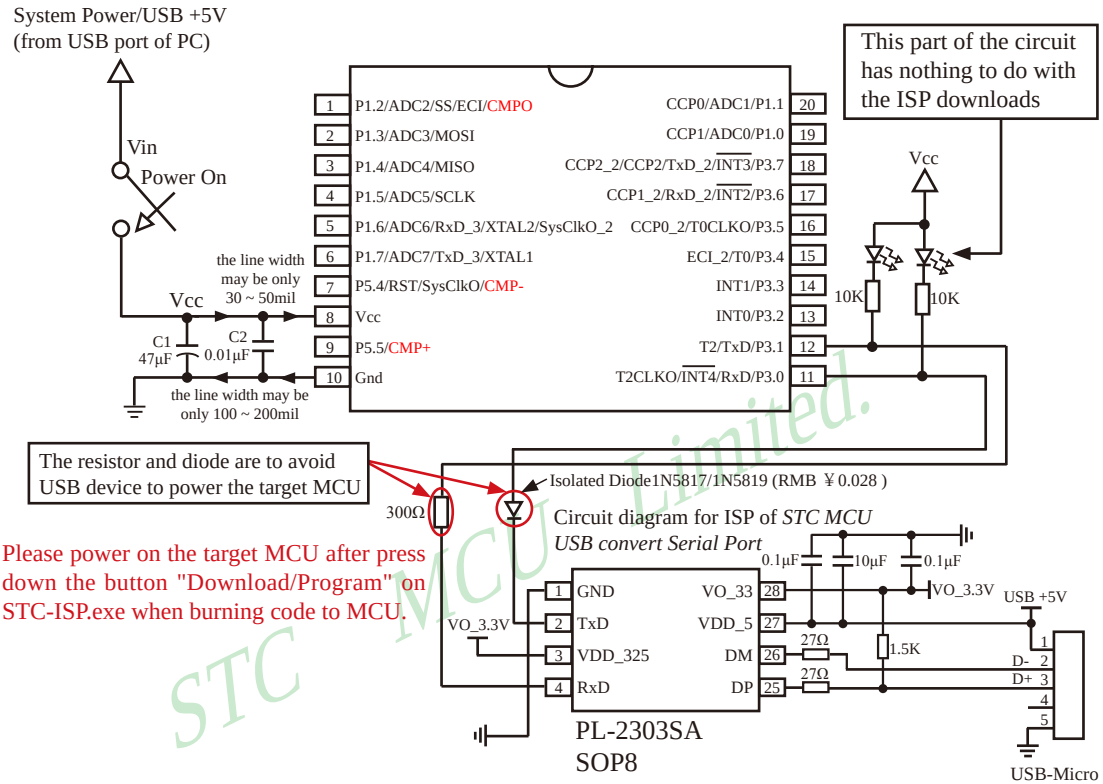

Internal hghly reliable Reset, External reset circuit can be completely removed.

P5.4/RST/MCLKO pin factory defaults to the I/O port, which can be set as RST reset pin(active high) through the STC-ISP programmer.

Internal high-precise R/C clock(±3%), ±1% temperature drift (-40℃~+85℃) while ±0.6% in normal temperature (-20℃~+65℃). External expensive crysal can be completely removed.

Recommend to add decoupling capacitor C1(47μF) and C2(0.1μF) between Vcc and Gnd that can remove power noise and improve the anti-interference ability.

1.5.7.3 Application Circuit Diagram for ISP using USB Chip PL-2303HXD / PL-2303HX to convert Serial Port

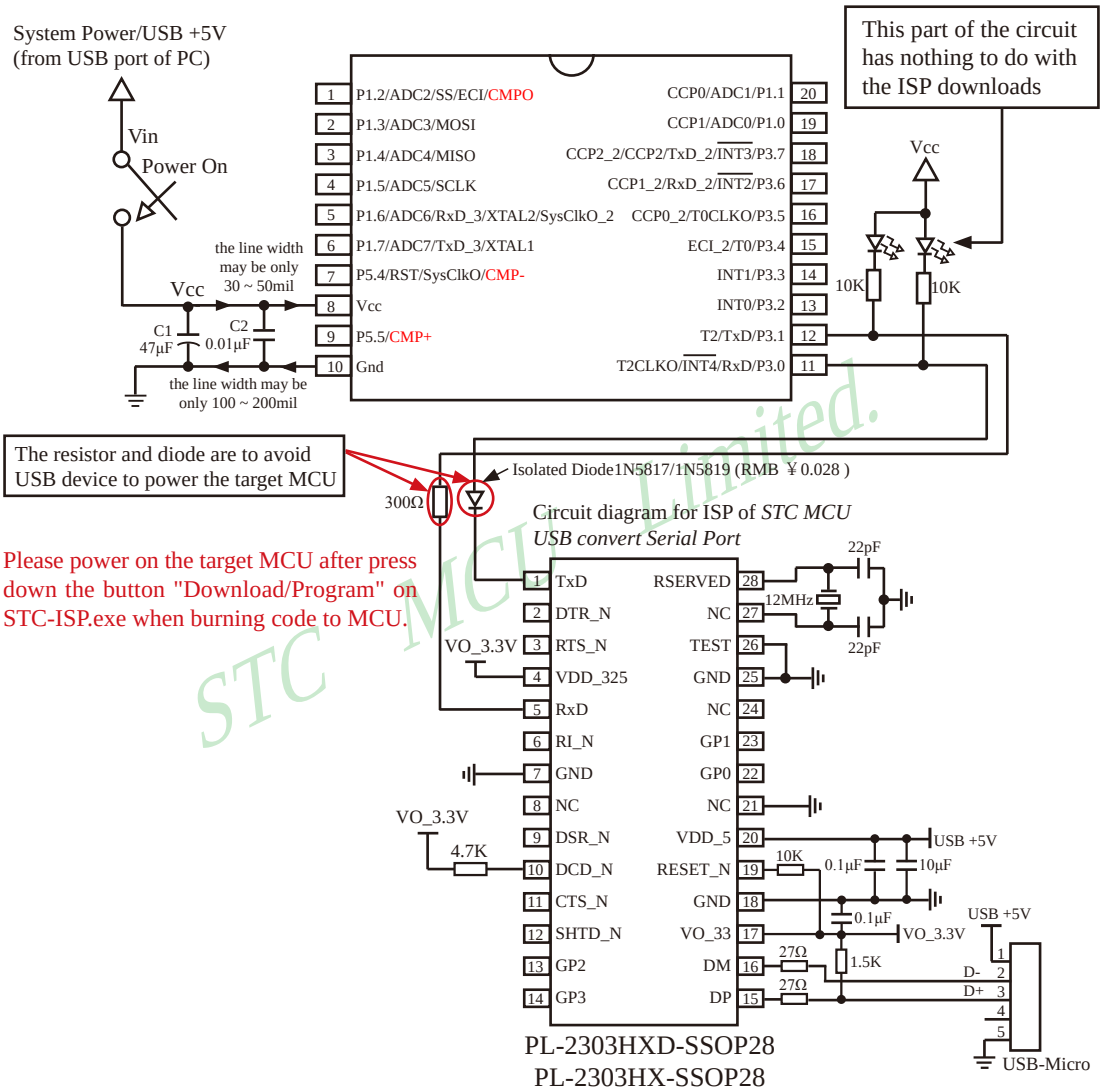

Internal hghly reliable Reset, External reset circuit can be completely removed.

P5.4/RST/MCLKO pin factory defaults to the I/O port, which can be set as RST reset pin(active high) through the STC-ISP programmer.

Internal high-precise R/C clock(±3%), ±1% temperature drift (-40℃~+85℃) while ±0.6% in normal temperature (-20℃~+65℃). External expensive crysal can be completely removed.

Recommend to add decoupling capacitor C1(47μF) and C2(0.1μF) between Vcc and Gnd that can remove power noise and improve the anti-interference ability.

1.5.8 Pin Descriptions of STC15W401AS series MCU

MNEMONIC	Pin Number				DESCRIPTION	
	SOP28 TSSOP28 SKDIP28	QFN28	SOP20 DIP20 TSSOP20	SOP16 DIP16		
P1.0/ADC0/ CCP1	3	27	19	15	P1.0	common I/O port PORT1[0]
					ADC0	ADC input channel-0
					CCP1	Capture of external signal(measure frequency or be used as external interrupts)、high-speed Pulse and Pulse-Width Modulation output channel-1
P1.1/ADC1/ CCP0	4	28	20	16	P1.1	common I/O port PORT1[1]
					ADC1	ADC input channel-1
					CCP0	Capture of external signal(measure frequency or be used as external interrupts)、high-speed Pulse and Pulse-Width Modulation output channel-0
P1.2/ADC2/SS/ ECI/CMPO	5	1	1	1	P1.2	common I/O port PORT1[2]
					ADC2	ADC input channel-2
					SS	Slave selection signal of synchronous serial peripheral interface----SPI
					ECI	External pulse input pin of CCP/PCA counter
					CMPO	The output port of reslut compared by comparator
P1.3/ADC3/ MOSI	6	2	2	2	P1.3	common I/O port PORT1[3]
					ADC3	ADC input channel-3
					MOSI	Master Output Slave Input of SPI
P1.4/ADC4/ MISO	7	3	3	3	P1.4	common I/O port PORT1[4]
					ADC4	ADC input channel-4
					MISO	Master Iutput Slave Onput of SPI
P1.5/ADC5/ SCLK	8	4	4	4	P1.5	common I/O port PORT1[5]
					ADC5	ADC input channel-5
					SCLK	Clock Signal of synchronous serial peripheral interface----SPI
P1.6/ADC6/ RxD_3/XTAL2/ SysClkO_2	9	5	5		P1.6	common I/O port PORT1[6]
					ADC6	ADC input channel-6
					RxD_3	Receive Data Port of UART
					XTAL2	Output from the inverting amplifier of internal clock circuit. This pin should be floated when an external oscillator is used.
					SysClkO_2	Master clock output; the output frequency can be SysClk/1, SysClk/2 and SysClk/4. The master clock can either be internal R/C clock or the external input clock or the external crystal oscillator.
P1.7/ADC7/ TxD_3/XTAL1	10	6	6		P1.7	common I/O port PORT1[7]
					ADC7	ADC input channel-7
					TxD_3	Transit Data Port of UART
					XTAL1	Input to the inverting oscillator amplifier of internal clock circuit. Receives the external oscillator signal when an external oscillator is used.

STC MCU Limited.

MNEMONIC	Pin Number				DESCRIPTION	
	SOP28 TSSOP28 SKDIP28	QFN28	SOP20 DIP20 TSSOP20	SOP16 DIP16		
P2.0/ RSTOUT_LOW	23	19			P2.0	common I/O port PORT2[0]
					RSTOUT_LOW	the pin output low after power-on and during reset, which can be set to output high by software
P2.1/SCLK_2	24	20			P2.1	common I/O port PORT2[1]
					SCLK_2	Clock Signal of synchronous serial peripheral interface----SPI
P2.2/MISO_2	25	21			P2.2	common I/O port PORT2[2]
					MISO_2	Master Iutput Slave Onput of SPI
P2.3/MOSI_2	26	22			P2.3	common I/O port PORT2[3]
					MOSI_2	Master Output Slave Input of SPI
P2.4/ECI_3/SS_2	27	23			P2.4	common I/O port PORT2[4]
					ECI_3	External pulse input pin of CCP/PCA counter
					SS_2	Slave selection signal of synchronous serial peripheral interface----SPI
P2.5/CCP0_3	28	24			P2.5	common I/O port PORT2[5]
					CCP0_3	Capture of external signal(measure frequency or be used as external interrupts)、high-speed Pulse and Pulse-Width Modulation output channel-0
P2.6/CCP1_3	1	25			P2.6	common I/O port PORT2[6]
					CCP1_3	Capture of external signal(measure frequency or be used as external interrupts)、high-speed Pulse and Pulse-Width Modulation output channel-1
P2.7/CCP2_3	2	26			P2.7	common I/O port PORT2[7]
					CCP2_3	Capture of external signal(measure frequency or be used as external interrupts)、high-speed Pulse and Pulse-Width Modulation output channel-2
P3.0/RxD/$\overline{\text{INT4}}$ /T2CLKO	15	11	11	9	P3.0	common I/O port PORT3[0]
					RxD	Receive Data Port of UART1
					$\overline{\text{INT4}}$	External interrupt 4, which only can be generated on falling edge. /INT4 supports power-down waking-up
					T2CLKO	T2 Clock Output The pin can be configured for T2CLKO by setting INT_CLKO[2] bit /T2CLKO
P3.1/TxD/T2	16	12	12	10	P3.1	common I/O port PORT3[1]
					TxD	Transit Data Port of UART1
					T2	External input of Timer/Counter 2
P3.2/INT0	17	13	13	11	P3.2	common I/O port PORT3[2]
					INT0	External interrupt 0, which both can be generated on rising and falling edge. INT0 only can generate interrupt on falling edge if IT0 (TCON.0) is set to 1. And, INT0 both can generate interrupt on rising and falling edge if IT0 (TCON.0) is set to 0.

STC MCU Limited.

MNEMONIC	Pin Number SOP28 TSSOP28 SKDIP28	QFN28	SOP20 DIP20 TSSOP20	SOP16 DIP16	DESCRIPTION	
P3.3/INT1	18	14	14	12	P3.3	common I/O port PORT3[3]
					INT1	External interrupt 1, which both can be generated on rising and falling edge. INT1 only can generate interrupt on falling edge if IT1 (TCON.2) is set to 1. And, INT1 both can generate interrupt on rising and falling edge if IT1 (TCON.2) is set to 0. INT1 supports power-down waking-up
P3.4/T0/ECI_2	19	15	15		P3.4	common I/O port PORT3[4]
					T0	External input of Timer/Counter 0
					ECI_2	External pulse input pin of CCP/PCA counter
P3.5/T0CLKO/ CCP0_2	20	16	16		P3.5	common I/O port PORT3[5]
					T0CLKO	T0 Clock Output The pin can be configured for T0CLKO by setting INT_CLKO[0] bit /T0CLKO
					CCP0_2	Capture of external signal(measure frequency or be used as external interrupts)、high-speed Pulse and Pulse-Width Modulation output channel-0
P3.6/$\overline{\text{INT2}}$/RxD_2 /CCP1_2	21	17	17	13	P3.6	common I/O port PORT3[6]
					$\overline{\text{INT2}}$	External interrupt 2, which only can be generated on falling edge. /INT2 supports power-down waking-up
					RxD_2	Receive Data Port of UART1
					CCP1_2	Capture of external signal(measure frequency or be used as external interrupts)、high-speed Pulse and Pulse-Width Modulation output channel-1
P3.7/$\overline{\text{INT3}}$/TxD_2/ CCP2/CCP2_2	22	18	18	14	P3.7	common I/O port PORT3[7]
					$\overline{\text{INT3}}$	External interrupt 3, which only can be generated on falling edge. $\overline{\text{INT3}}$ supports power-down waking-up
					TxD_2	Transit Data Port of UART
					CCP2	Capture of external signal(measure frequency or be used as external interrupts)、high-speed Pulse and Pulse-Width Modulation output channel-2
					CCP2_2	Capture of external signal(measure frequency or be used as external interrupts)、high-speed Pulse and Pulse-Width Modulation output channel-2
P5.4/RST/ SysClkO/CMP-	11	7	7	5	P5.4	common I/O port PORT5[4]
					RST	Reset pin. A high on this pin for at least two machine cycles will reset the device.
					SysClkO	Master clock output; the output frequency can be SysClk/1, SysClk/2 and SysClk/4. The master clock can either be internal R/C clock or the external input clock or the external crystal oscillator.
					CMP-	Comparator negative input
P5.5/CMP+	13	9	9	7	P5.5	common I/O port PORT5[5]
					CMP+	Comparator positive input
Vcc	12	8	8	6	The positive pole of power	
Gnd	14	10	10	8	The negative pole of power, Gound	

STC MCU Limited.

1.6 General Overview of STC15W404S series MCU

1.6.1 Introduction of STC15W404S series MCU (In abundant supply)

STC15W404S series MCU is a single-chip microcontroller based on a high performance 1T architecture 8051 CPU, which is produced by STC MCU Limited. It is a new generation of 8051 MCU of high speed, high stability, wide voltage range, low power consumption and super strong anti-disturbance. Besides, STC15W404S series MCU is a MCU of super advanced encryption, because it adopts the ninth generation of STC encryption technology. With the enhanced kernel, STC15W404S series MCU is faster than a traditional 8051 in executing instructions (about 8~12 times the rate of a traditional 8051 MCU), and has a fully compatible instruction set with traditional 8051 series microcontroller. External expensive crystal can be removed by being integrated internal high-precise R/C clock(±0.3%) with ±1% temperature drift (-40℃~+85℃) while ±0.6% in normal temperature (-20℃~+65℃) and wide frenquency adjustable between 5MHz and 35MHz. External reset curcuit also can be removed by being integrated internal highly reliable one with 16 levels optional threshold voltage of reset. The STC15W404S series MCU retains all features of the traditional 8051. In addition, it has three Timers/Counters, dual DPTR and a high-speed asynchronous serial port----UART(can be regarded as 3 serial ports by shifting among 3 groups of pins) and a high-speed synchronous serial peripheral interface----SPI. STC15W404S series MCU is usually used in serial communication or electrical control or some occasion with strong disturbance.

In Keil C development environment, select the Intel 8052 to compiling and only contain < reg51.h > as header file.

STC15 series MCU with super high-speed CPU core of STC-Y5 works 20% faster than STC early 1T series (such as STC12/STC11/STC10 series) at same clock frequency.

STC MCU Limited.

- Enhanced 8051 Central Processing Unit, 1T, single clock per machine cycle, faster 8~12 times than the rate of a traditional 8051.
- Operating voltage range: 5.5V ~ 2.5V.
- On-chip 4K / 8K / 10K / 13K / 15.5K FLASH program memory with flexible ISP/IAP capability, can be repeatedly erased more than 100 thousand times.
- on-chip 512 bytes SRAM: 256 byte scratch-pad RAM and 256 bytes of auxiliary RAM
- Be capable of addressing up to 64K byte of external RAM
- On-chip EEPROM with large capacity can be repeatedly erased more than 100 thousand times.
- Dual Data Pointer (DPTR) to speed up data movement
- ISP/IAP, In-System-Programming and In-Application-Programming , no need for programmer and emulator.
- Internal hghly reliable Reset with 16 levels optional threshold voltage of reset, external reset curcuit can be completely removed
- Internal high- precise R/C clock(±0.3%) with ±1% temperature drift (-40℃~+85℃) while ±0.6% (-20℃~+65℃) in normal temperature and wide frenquency adjustable between 5MHz and 35MHz (5.5296MHz / 11.0592MHz / 22.1184MHz / 33.1776MHz)
- No need external crystal and reset, and can output clock and low reset signal from MCU.
- Operating frequency range: 5- 35MHz, is equivalent to traditional 8051:60~420MHz.

- A high-speed asynchronous serial port----UART(can be used simultaneously and regarded as 3 serial ports by shifting among 3 groups of pins):
  UART1(RxD/P3.0, TxD/P3.1) can be switched to (RxD_2/P3.6, TxD_2/P3.7),
  also can be switched to (RxD_3/P1.6, TxD_3/P1.7).
- A high-speed synchronous serial peripheral interface----SPI.
- Support the function of Encryption Download (to protect your code from being intercepted).
- Support the function of RS485 Control
- Code protection for flash memory access, excellent noise immunity, very low power consumption
- Power management mode: Slow-Down mode, Idle mode(all interrupt can wake up Idle mode), Stop/Power-Down mode.
- Timers which can wake up stop/power-down mode: have internal low-power special wake-up Timer.
- Resource which can wake up stop/power-down mode are: INT0/P3.2, INT1/P3.3 (INT0/INT1, may be generated on both rising and falling edges), $\overline{\text{INT2}}$/P3.6, $\overline{\text{INT3}}$/P3.7, $\overline{\text{INT4}}$/P3.0 ($\overline{\text{INT2}}$ /$\overline{\text{INT3}}$/$\overline{\text{INT4}}$, only be generated on falling edge); pins RxD; pins T0/T1/T2(their falling edge can wake up if T0/T1/T2 have been enabled before power-down mode, but no interrupts can be generatetd); internal low-power special wake-up Timer.
- threee 16-bit reloadable Timers/Counters(T0/T1/T2, T0 and T1 are compatible with Timer0/Timer1 of traditional 8051), T0/T1/T2 all can independently achieve external programmable clock output (3 channels).
- Programmable clock output function(output by dividing the frequency of the internal system clock or the input clock of external pin):
  The speed of external programmable clock output of 5V MCU is also not more than 13.5MHz, because the output speed of I/O port of STC15 series 5V MCU is not more than 13.5MHz.
  The speed of external programmable clock output of 3.3V MCU is also not more than 8MHz, because the output speed of I/O port of STC15 series 3.3V MCU is not more than 8MHz.
  ① The Programmable clock output of T0 is on P3.5/T0CLKO (output by dividing the frequency of the internal system clock or the input clock of external pin T0/P3.4)
  ② The Programmable clock output of T1 is on P3.4/T1CLKO (output by dividing the frequency of the internal system clock or the input clock of external pin T1/P3.5)
  ③ The Programmable clock output of T2 is on P3.0/T2CLKO (output by dividing the frequency of the internal system clock or the input clock of external pin T2/P3.1)
  Three timers/counters in above all can be output by dividing the frequency from 1 to 65536.
  ④ The Programmable clock output of master clock is on P5.4/MCLKO or P1.6/XTAL2/MCLKO_2, and its frequency can be divided into MCLK/1, MCLK/2, MCLK/4.

  The master clock can either be internal R/C clock or the external input clock or the external crystal oscillator.

  MCLK is the frequency of master clock. MCLKO is the output of master clock.

  It is on MCLKO/P3.4 that the Programmable clock output of master clock of STC15 series 8-pin MCU (such as STC15F101W series). However, it is on MCLKO/P5.4 that the Programmable clock output of master clock of other STC15 series MCU including 16-pin or more than 16-pin MCU(such as STC15F2K60S2, STC15W4K32S4 and so on)

STC MCU Limited

- Comparator, which support comparing by external pin CMP+ and CMP- or internal reference voltage and generating output signal (its polarity can be configured) on CMPO pin can be used as 1 channel ADC or brownout detect function.
- One 15 bits Watch-Dog-Timer with 8-bit pre-scaler (one-time-enabled)
- advanced instruction set, which is fully compatible with traditional 8051 MCU, have hardware multiplication / division command.
- 42/38/30/26 common I/O ports are available, their mode is quasi_bidirectional/weak pull-up (traditional 8051 I/O ports mode) after reset, and can be set to four modes: quasi_bidirectional/weak pull-up, strong push-pull/ strong pull-up, input-only/high-impedance and open drain.
  the driving ability of each I/O port can be up to 20mA, but it don't exceed this maximum 120mA that the current of the whole chip of 40-pin or more than 40-pin MCU, while 90mA that the current of the whole chip of 16-pin or more than 16-pin MCU or 32-pin or less than 32-pin MCU.
  If I/O ports are not enough, it can be extended by connecting a 74HC595(reference price: RMB 0.15 yuan). Besides, cascading several chips also can extend to dozens of I/O ports.
- Package: LQFP44 (12mm x 12mm), LQFP32 (9mm x 9mm), SOP28, SKDIP28, PDIP40.
- All products are baked 8 hours in high-temperature 175℃ after be packaged, Manufacture guarantee good quality.
- In Keil C development environment, select the Intel 8052 to compiling and only contain < reg51.h > as header file.

STC MCU Limited.

1.6.2 Block diagram of STC15W404S series

The internal structure of STC15W404S series MCU is shown in the block diagram below. STC15W404S series MCU includes central processor unit(CPU), program memory (Flash), data memory(SRAM), Timers/Counters, I/O ports, Comparator, Watchdog, high-speed asynchronous serial communication ports---UART, a group of high-speed synchronous serial peripheral interface (SPI), internal high- precise R/C clock, internal hghly reliable Reset and so on. STC15W404S series MCU almost includes all of the modules required in data acquisition and control, and can be regarded as an on-chip system (SysTem Chip or SysTem on Chip, abbreviated as STC, this is the name origin of Hongjing technology STC Limited).

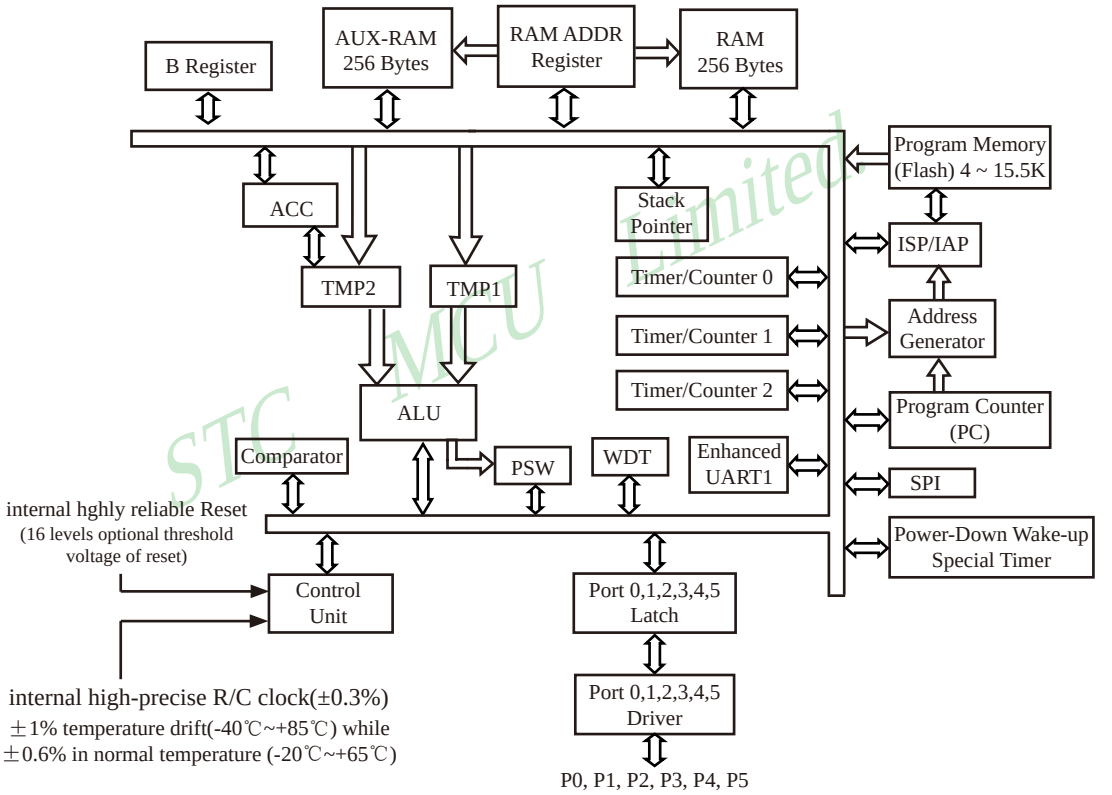

STC15W404S series Block Diagram

1.6.3 Pin Configurations of STC15W404S series MCU

LQFP44(12x12mm)

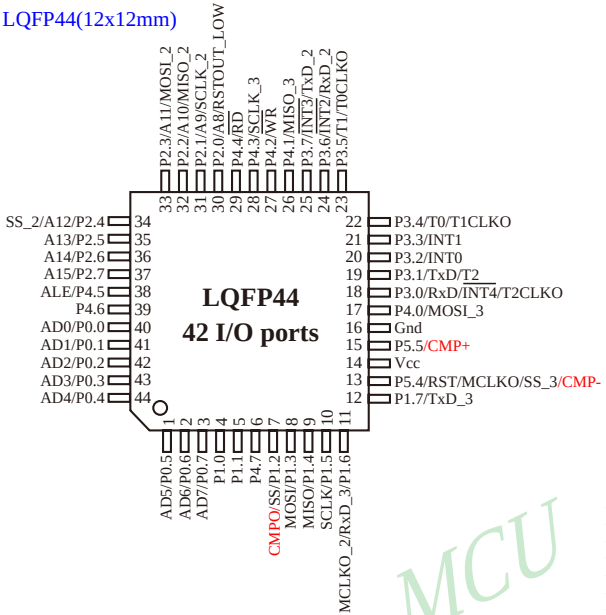

Note：P0 ports can be multiplexed as Address/Data bus，not as A/D Converter. P0.x/ADx means that P0.x can be used as Address/Data bus in the pin map.

Recommend UART1 on [P3.6/RxD_2, P3.7/TxD_2] or [P1.6/RxD_3/XTAL2, P1.7/TxD_3/XTAL1]

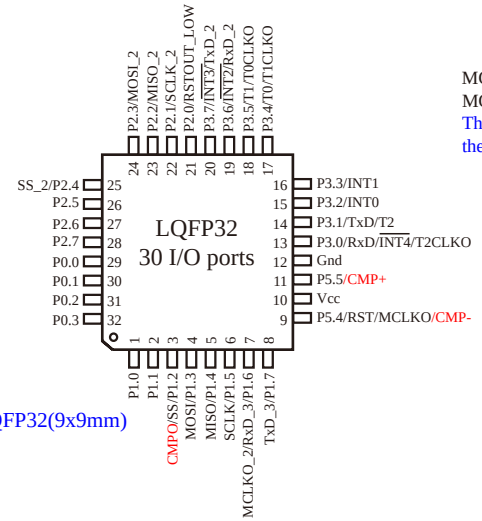

LQFP32(9x9mm)

All packages meet EU RoHS standards

T0CLKO refers to the programmable clock output of Timer/Counter 0
(output by dividing the frequency of the internal system clock or the input clock of external pin T0/P3.4);

T1CLKO refers to the programmable clock output of Timer/Counter 1
(output by dividing the frequency of the internal system clock or the input clock of external pin T1/P3.5);

T2CLKO refers to the programmable clock output of Timer/Counter 2
(output by dividing the frequency of the internal system clock or the input clock of external pin T2/P3.1);

In addition to programmable output on the internal system clock, T0CLKO/T1CLKO/T2CLKO also can be used as divider by dividing the frequency of the internal system clock or the input clock of external pin T0/T1/T2.

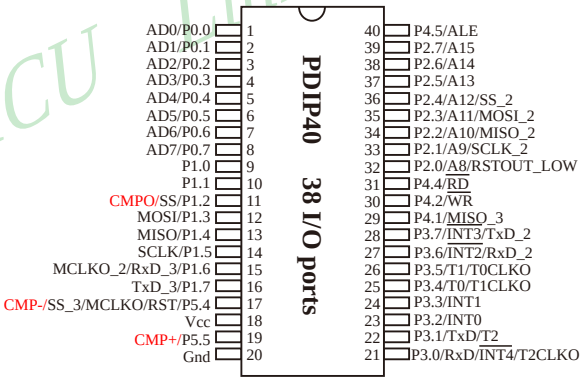

MCLKO is the output of master clock whose frequency can be divided into MCLK/1, MCLK/2, MCLK/4
The master clock can either be internal R/C clock or the external input clock or the external crystal oscillator. MCLK is the frequency of master clock.

The speed of external programmable clock output of 5V MCU is also not more than 13.5MHz, because the output speed of I/O port of STC15 series 5V MCU is not more than 13.5MHz.

The speed of external programmable clock output of 3.3V MCU is also not more than 8MHz, because the output speed of I/O port of STC15 series 3.3V MCU is not more than 8MHz.

STC MCU Limited

MCLKO is the output of master clock whose frequency can be divided into MCLK/1, MCLK/2, MCLK/4

The master clock can either be internal R/C clock or the external input clock or the external crystal oscillator. MCLK is the frequency of master clock.

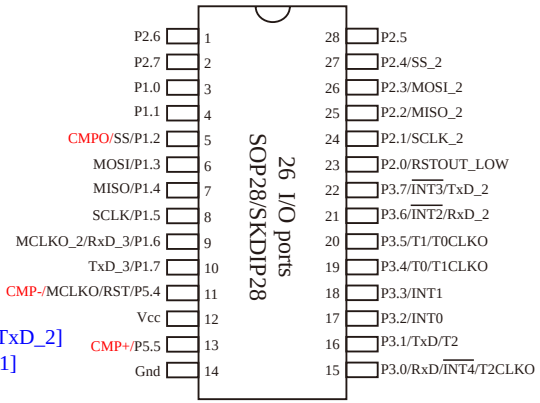

Recommend UART1 on [P3.6/RxD_2, P3.7/TxD_2] or [P1.6/RxD_3/XTAL2, P1.7/TxD_3/XTAL1]

The speed of external programmable clock output of 5V MCU is also not more than 13.5MHz, because the output speed of I/O port of STC15 series 5V MCU is not more than 13.5MHz.

The speed of external programmable clock output of 3.3V MCU is also not more than 8MHz, because the output speed of I/O port of STC15 series 3.3V MCU is not more than 8MHz.

T0CLKO refers to the programmable clock output of Timer/Counter 0
(output by dividing the frequency of the internal system clock or the input clock of external pin T0/P3.4);

T1CLKO refers to the programmable clock output of Timer/Counter 1
(output by dividing the frequency of the internal system clock or the input clock of external pin T1/P3.5);

T2CLKO refers to the programmable clock output of Timer/Counter 2
(output by dividing the frequency of the internal system clock or the input clock of external pin T2/P3.1);

In addition to programmable output on the internal system clock, T0CLKO/T1CLKO/T2CLKO also can be used as divider by dividing the frequency of the internal system clock or the input clock of external pin T0/T1/T2.

STC MCU Limited.

Mnemonic	Add	Name	7	6	5	4	3	2	1	0	Reset Value
AUXR1 P_SW1	A2H	Auxiliary register 1	S1_S1	S1_S0	CCP_S1	CCP_S0	SPI_S1	SPI_S0	0	DPS	00xx,0000
CLK_DIV (PCON2)	97H	Clock Division register	MCKO_S1	MCKO_S0	ADRJ	Tx_Rx	MCLKO_2	CLKS2	CLKS1	CLKS0	0000,0000

UART1/S1 can be switched in 3 groups of pins by selecting the control bits S1_S0 and S1_S1.		
S1_S1	S1_S0	UART1/S1 can be switched between P1 and P3
0	0	UART1/S1 on [P3.0/RxD,P3.1/TxD]
0	1	UART1/S1 on [P3.6/RxD_2,P3.7/TxD_2]
1	0	UART1/S1 on [P1.6/RxD_3/XTAL2,P1.7/TxD_3/XTAL1] when UART1 is on P1, please using internal R/C clock.
1	1	Invalid

Recommed UART1 on [P3.6/RxD_2,P3.7/TxD_2] or [P1.6/RxD_3/XTAL2,P1.7/TxD_3/XTAL1].

Mnemonic	Add	Name	7	6	5	4	3	2	1	0	Reset Value
AUXR1 P_SW1	A2H	Auxiliary register 1	S1_S1	S1_S0	CCP_S1	CCP_S0	SPI_S1	SPI_S0	0	DPS	00xx,0000
CLK_DIV (PCON2)	97H	Clock Division register	MCKO_S1	MCKO_S0	ADRJ	Tx_Rx	MCLKO_2	CLKS2	CLKS1	CLKS0	0000,0000

SPI can be switched in 3 groups of pins by selecting the control bits SPI_S1 and SPI_S0		
SPI_S1	SPI_S0	SPI can be switched in P1, P2 and P4
0	0	SPI on [P1.2/SS, P1.3/MOSI, P1.4/MISO, P1.5/SCLK]
0	1	SPI on [P2.4/SS_2, P2.3/MOSI_2, P2.2/MISO_2, P2.1/SCLK_2]
1	0	SPI on [P5.4/SS_3, P4.0/MOSI_3, P4.1/MISO_3, P4.3/SCLK_3]
1	1	Invalid

DPS：DPTR registers select bit.

0: DPTR0 is selected

1: DPTR1 is selected

MCKO_S1	MCKO_S0	the control bit of master clock output by dividing the frequency (The master clock can either be internal R/C clock or the external input clock or the external crystal oscillator)
0	0	Master clock do not output external clock
0	1	Master clock output external clock，but its frequency do not be divided，and the output clock frequency = MCLK / 1
1	0	Master clock output external clock，but its frequency is divided by 2，and the output clock frequency = MCLK / 2
1	1	Master clock output external clock，but its frequency is divided by 4，and the output clock frequency = MCLK / 4

The master clock can either be internal R/C clock or the external input clock or the external crystal oscillator.

MCLK is the frequency of master clock.

STC15W404S series MCU output master clock on MCLKO/P5.4

It is on MCLKO/P3.4 that the Programmable clock output of master clock of STC15 series 8-pin MCU (such as STC15F101W series). However, it is on MCLKO/P5.4 that the Programmable clock output of master clock of other STC15 series MCU including 16-pin or more than 16-pin MCU.

MCLKO_2：to select Master Clock output on where

0：Master Clock output on MCLKO/P5.4

1：Master Clock output on MCLKO_2/XTAL2/P1.6

The master clock can either be internal R/C clock or the external input clock or the external crystal oscillator.

Tx_Rx：the set bit of relay and broadcast mode of UART1

0：UART1 works on normal mode

1：UART1 works on relay and broadcast mode，that to say output the input level state of RxD port to the outside TxD pin in real time, namely the external output of TxD pin can reflect the input level state of RxD port.

the RxD and TxD of UART1 can be switched in 3 groups of pins: [RxD/P3.0, TxD/P3.1];
[RxD_2/P3.6, TxD_2/P3.7];
[RxD_3/P1.6, TxD_3/P1.7].

STC MCU Limited.

Mnemonic	Add	Name	7	6	5	4	3	2	1	0	Reset Value
CLK_DIV (PCON2)	97H	Clock Division register	MCKO_S1	MCKO_S0	ADRJ	Tx_Rx	MCLKO_2	CLKS2	CLKS1	CLKS0	0000,0000

CLKS2	CLKS1	CLKS0	the control bit of system clock (System clock refers to the master clock that has been divided frequency, which is offered to CPU, UARTs, SPI, Timers, CCP/PWM/PCA and A/D Converter)
0	0	0	Master clock frequency/1, No division
0	0	1	Master clock frequency/2
0	1	0	Master clock frequency/4
0	1	1	Master clock frequency/8
1	0	0	Master clock frequency/16
1	0	1	Master clock frequency/32
1	1	0	Master clock frequency/64
1	1	1	Master clock frequency/128

The master clock can either be internal R/C clock or the external input clock or the external crystal oscillator.

STC MCU Limited.

1.6.4 STC15W404S series Selection and Price Table

Type 1T 8051 MCU	Operating Voltage (V)	Flash (byte)	SRAM (byte)	UART	SPI	common Timers T0-T2	CCP PCA PWM	Speical Power-down Wake-up Timer	Standard External Interrupts	A/D 8-channel	COMPARATOR	DPTR	EEP ROM	Internal Low-Voltage Detection Interrupt	WDT	Internal High-reliable Reset (with optional threshold voltage)	Internal High-Precise Clock	Output clock and reset signal from MCU	Encryption Download (to protect your code from being intercepted)	RS485 Control	All Packages LQFP44/ PDIP40 LQFP32 SOP28/ SKDIP28 Price of a part of packages(RMB ¥) LQFP44	SOP28
STC15W404S series MCU Selection and Price Table																						
STC15W404S	2.5-5.5	4K	512	1	Y	3	N	Y	5	N	Y	2	9K	Y	Y	16-level	Y	Y	Y	Y	¥2.5	¥2.3
STC15W408S	2.5-5.5	8K	512	1	Y	3	N	Y	5	N	Y	2	5K	Y	Y	16-level	Y	Y	Y	Y	¥2.7	¥2.5
STC15W410S	2.5-5.5	10K	512		Y	3	N			N	Y	2	3K	Y	Y	16-level					¥2.8	
IAP15W413S	2.5-5.5	13K	512	1	Y	3	N	Y	5	N	Y	2	IAP	Y	Y	16-level	Y	Y	Y	Y	¥2.8	¥2.6
																					The program Flash in user program area can be used as EEPROM.	
IRC15W415S (Fixed internal 24MHz clock)	2.5-5.5	15.5K	512	1	Y	3	N	Y	5	N	Y	2	IAP	Y	Y	Fixed	Y	Y	N	N	¥2.8	¥2.6
																					The program Flash in user program area can be used as EEPROM.	

Encryption Download : please burn source code with encryption key onto MCU in the factory. Then, you can make a simple update software just with one "update" button by fisrtly using the fuction "encrytion download" and then "release project" to update yourself code unabled to be intercepted when you need to upgrade your code.

To provide customized IC services

Because the last 7 bytes of the program area is stored mandatorily the contents of only global ID, the program space the user can actually use is 7 bytes smaller than the space shown in the selection table.

Conclusion : STC15W404S series MCU have: Three 16-bit relaodable Timers/Counters that are Timer/Counter 0, Timer/Counter 1 and Timer/Counter 2; 5 external interrupts INT0/INT1/$\overline{INT2}$/$\overline{INT3}$/$\overline{INT4}$; 1 high-speed asynchronous serial port ---- UART; a high-speed synchronous serial peripheral interface ---- SPI; 1 Comparator; 2 data pointers ---- DPTR; external data bus and so on.

1.6.5 STC15W404S series Package and Price Table

Type 1T 8051 MCU	Operating Voltage (V)	Operating Frequency (MHz)	Operating Temprature (I — Industrial)	All Packages Price(RMB ¥) LQFP44 / PDIP40 / LQFP32 / SOP28 / SKDIP28				
				LQFP44	PDIP40	LQFP32	SOP28	SKDIP28
STC15W404S series MCU Package and Price Table								
STC15W404S	2.5-5.5	35	-40℃ ~ +85℃	¥2.5	¥3.0	¥2.4	¥2.3	¥2.5
STC15W408S	2.5-5.5	35	-40℃ ~ +85℃	¥2.7	¥3.0	¥2.6	¥2.5	¥2.7
STC15W410S	2.5-5.5	35	-40℃ ~ +85℃	¥2.8				
IAP15W413S	2.5-5.5	35	-40℃ ~ +85℃	¥2.8	¥3.3	¥2.7	¥2.6	¥2.8
IRC15W415S	2.5-5.5	35	-40℃ ~ +85℃	¥2.8	¥3.3	¥2.7	¥2.6	¥2.8

STC MCU Limited.

1.6.6 Naming rules of STC15W404S series MCU

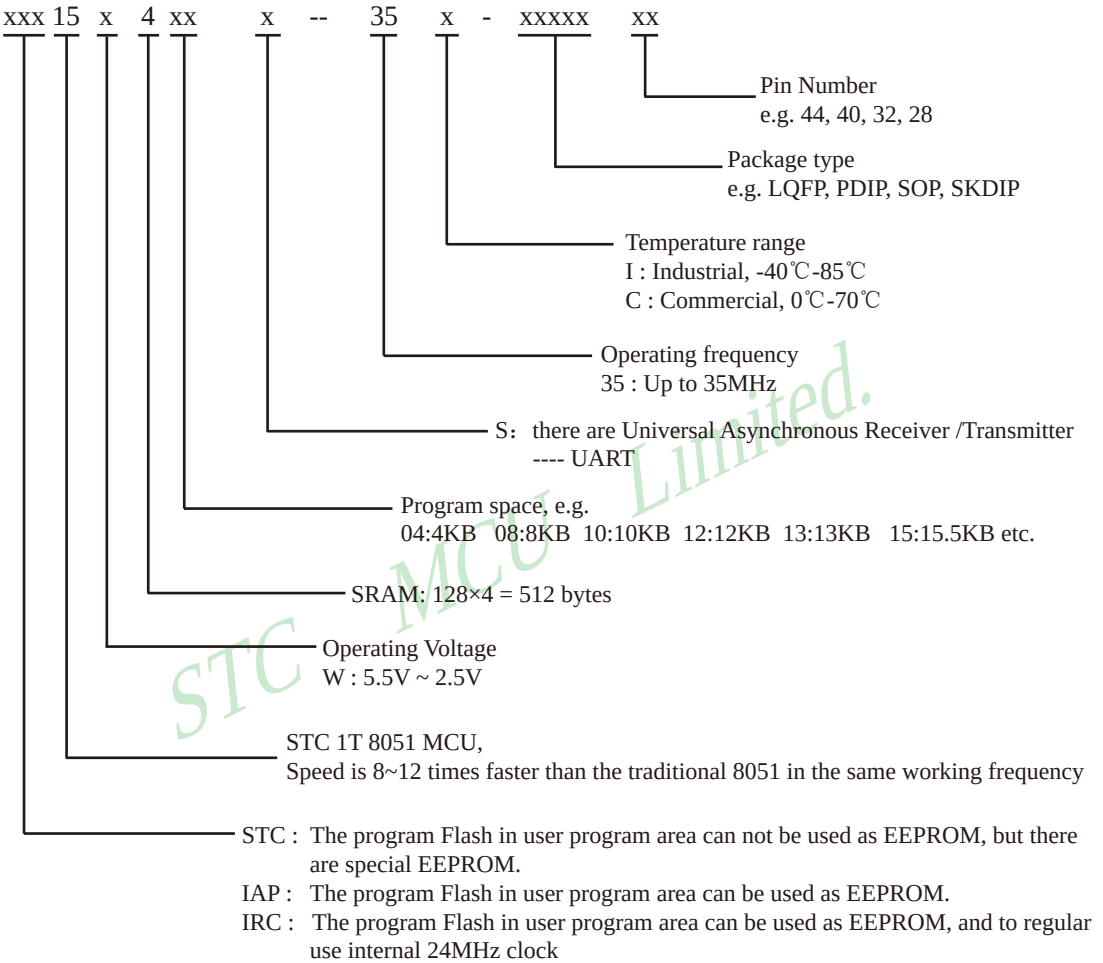

STC MCU Limited.

1.6.7 Application Circuit Diagram for ISP of STC15W404S series MCU

1.6.7.1 Application Circuit Diagram for ISP using RS-232 Converter

Note：P0 ports can be multiplexed as Address/Data bus，not as A/D Converter.

P0.x/ADx means that P0.x can be used as Address/Data busin the pin map.

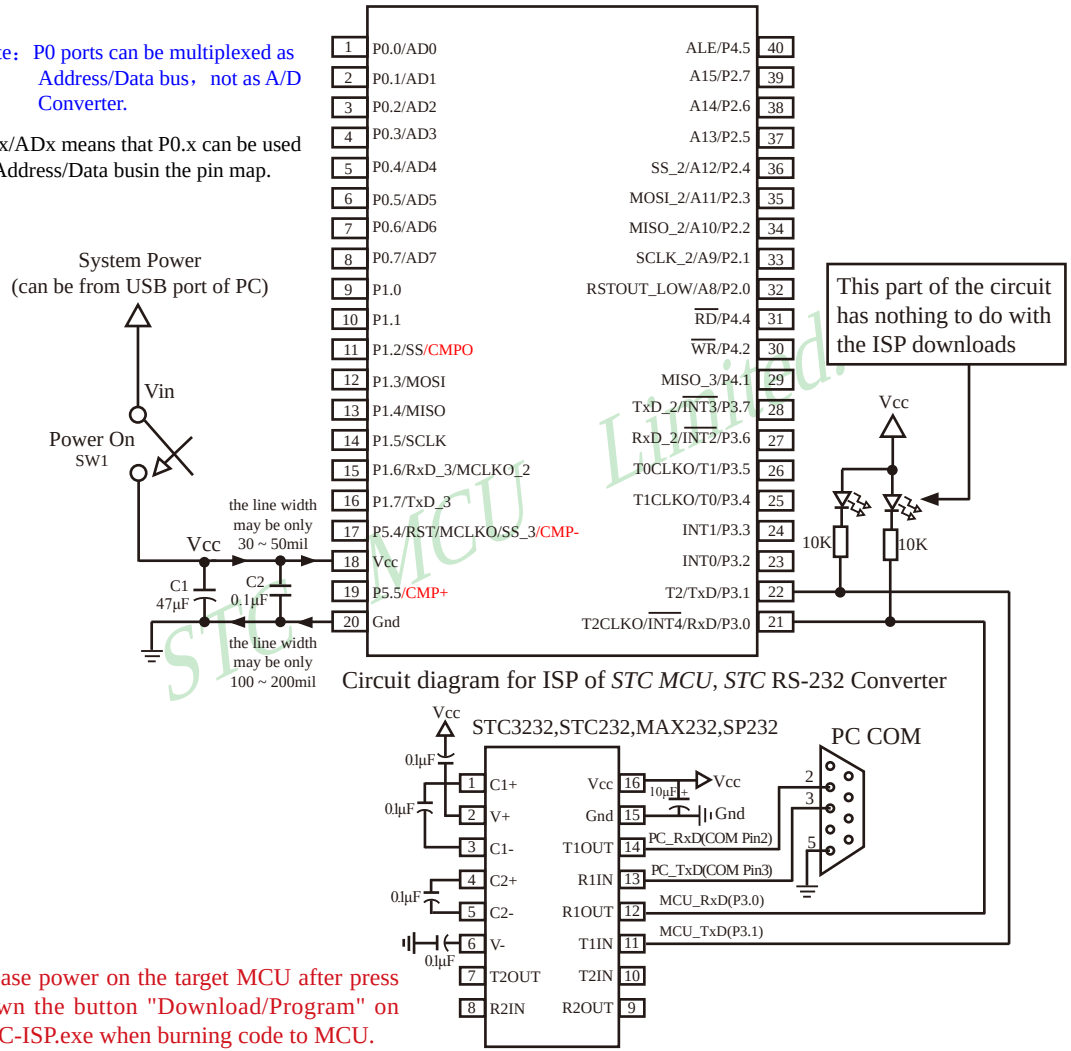

Please power on the target MCU after press down the button "Download/Program" on STC-ISP.exe when burning code to MCU.

Internal hghly reliable Reset, External reset circuit can be completely removed.

P5.4/RST/MCLKO pin factory defaults to the I/O port, which can be set as RST reset pin(active high) through the STC-ISP programmer.

Internal high-precise R/C clock(±3%), ±1% temperature drift (-40℃~+85℃) while ±0.6% in normal temperature (-20℃~+65℃). External expensive crysal can be completely removed.

Recommend to add decoupling capacitor C1(47μF) and C2(0.1μF) between Vcc and Gnd that can remove power noise and improve the anti-interference ability.

1.6.7.2 Application Circuit Diagram for ISP using USB Chip PL-2303SA to convert Serial Port

Note：P0 ports can be multiplexed as Address/Data bus，not as A/D Converter.

P0.x/ADx means that P0.x can be used as Address/Data busin the pin map.

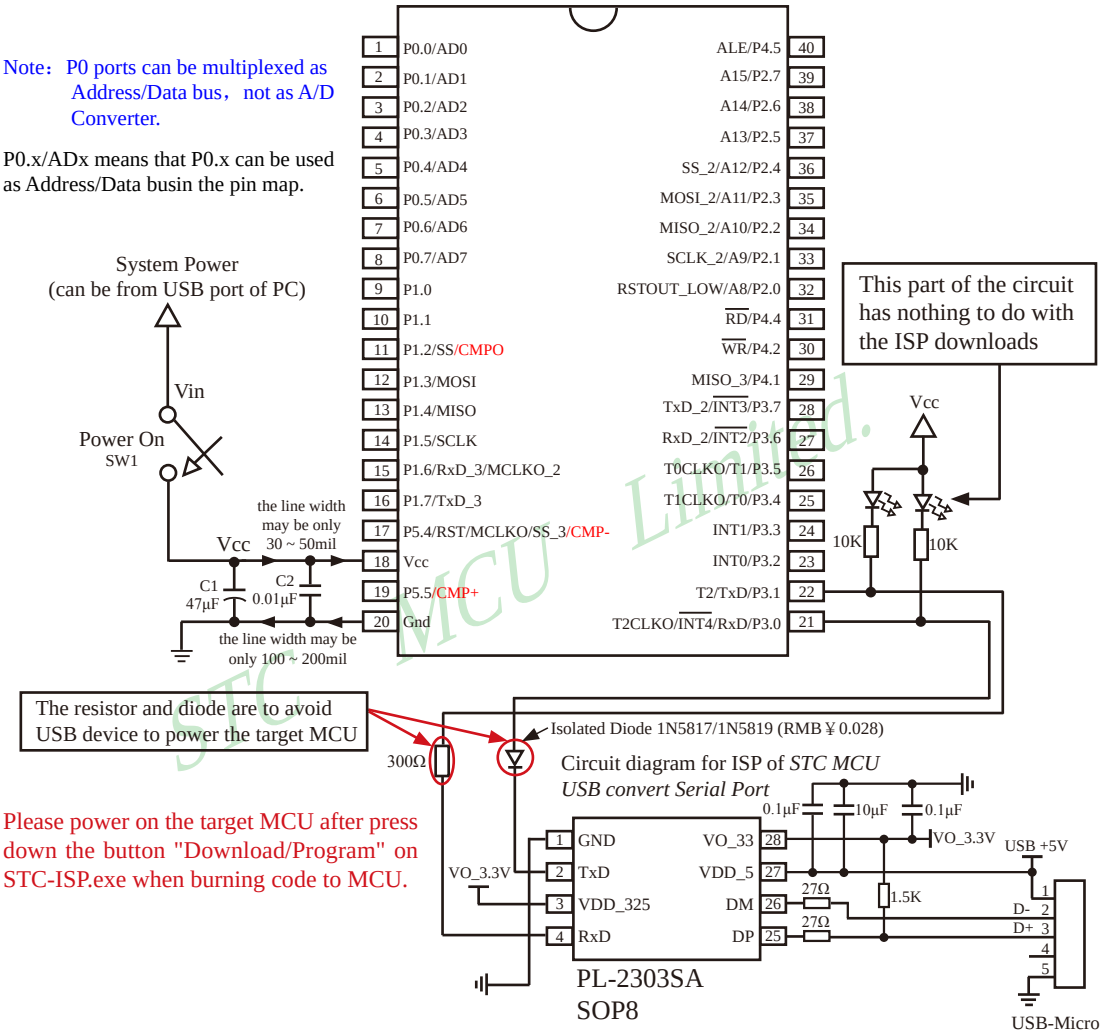

Please power on the target MCU after press down the button "Download/Program" on STC-ISP.exe when burning code to MCU.

Internal hghly reliable Reset, External reset circuit can be completely removed.

P5.4/RST/MCLKO pin factory defaults to the I/O port, which can be set as RST reset pin(active high) through the STC-ISP programmer.

Internal high-precise R/C clock(±3%), ±1% temperature drift (-40℃~+85℃) while ±0.6% in normal temperature (-20℃~+65℃). External expensive crysal can be completely removed.

Recommend to add decoupling capacitor C1(47μF) and C2(0.1μF) between Vcc and Gnd that can remove power noise and improve the anti-interference ability.

1.6.7.3 Application Circuit Diagram for ISP using USB Chip PL-2303HXD / PL-2303HX to convert Serial Port

Note：P0 ports can be multiplexed as Address/Data bus，not as A/D Converter.

P0.x/ADx means that P0.x can be used as Address/Data busin the pin map.

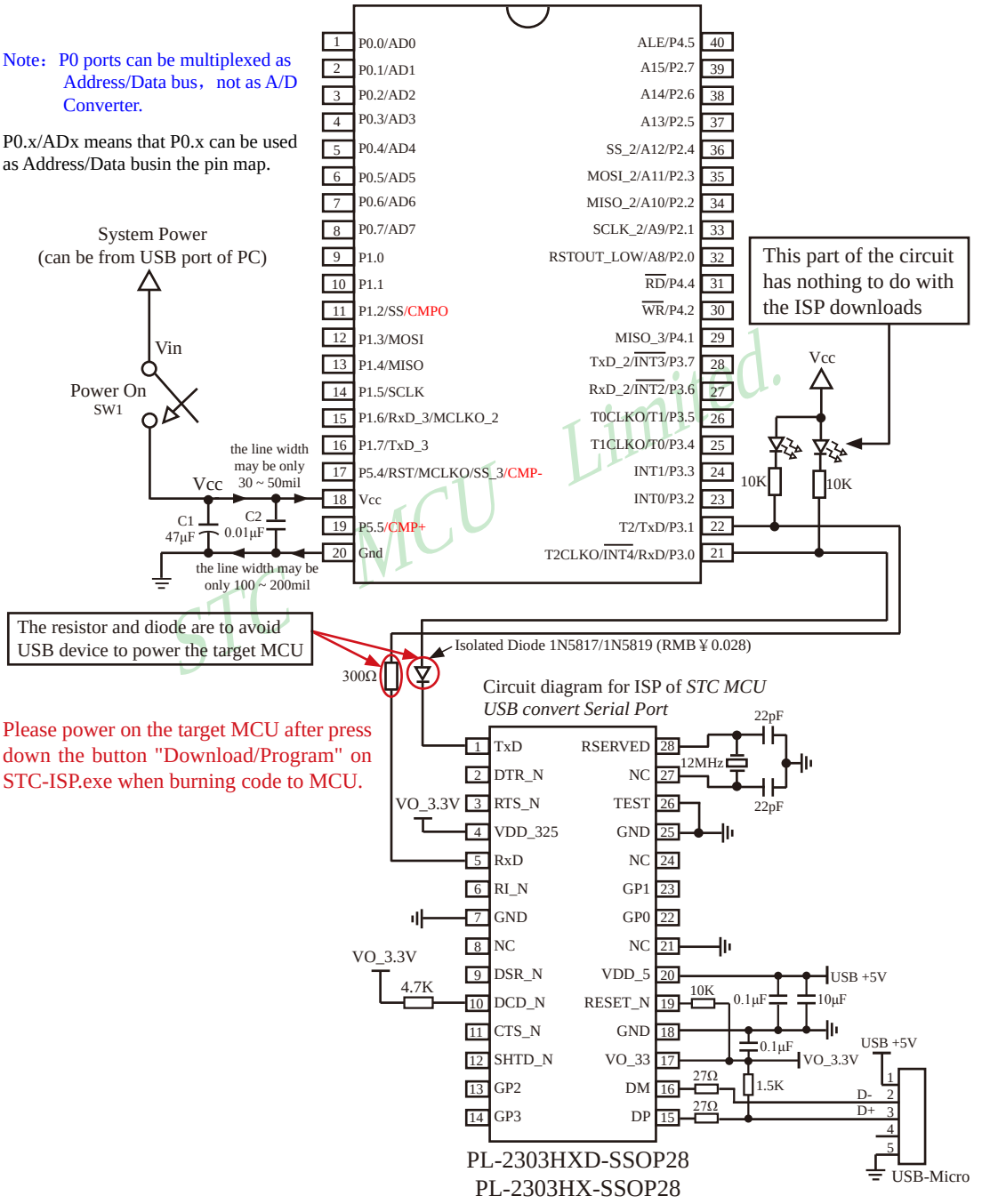

Please power on the target MCU after press down the button "Download/Program" on STC-ISP.exe when burning code to MCU.

1.6.8 Pin Descriptions of STC15W404S series MCU

MNEMONIC	Pin Number						DESCRIPTION	
	LQFP44	PLCC44	PDIP40	SOP32	LQFP32	SOP28 SKDIP28		
P0.0/AD0	40	2	1	1	29	-	P0.0	common I/O port PORT0[0]
P0.1/AD1	41	3	2	2	30	-	P0.1	common I/O port PORT0[1]
P0.2/AD2	42	4	3	3	31	-	P0.2	common I/O port PORT0[2]
P0.3/AD3	43	5	4	4	32	-	P0.3	common I/O port PORT0[3]
P0.4/AD4	44	6	5	-	-	-	P0.4	common I/O port PORT0[4]
P0.5/AD5	1	7	6	-	-	-	P0.5	common I/O port PORT0[5]
P0.6/AD5	2	8	7	-	-	-	P0.6	common I/O port PORT0[6]
P0.7/AD7	3	9	8	-	-	-	P0.7	common I/O port PORT0[7]
P1.0	4	10	9	5	1	3	common I/O port PORT1[0]	
P1.1	5	11	10	6	2	4	common I/O port PORT1[1]	
P1.2/SS/CMPO	7	13	11	7	3	5	P1.2	common I/O port PORT1[2]
							SS	Slave selection signal of synchronous serial peripheral interface----SPI
							CMPO	The output port of reslut compared by comparator
P1.3/MOSI	8	14	12	8	4	6	P1.3	common I/O port PORT1[3]
							MOSI	Master Output Slave Input of SPI
P1.4/MISO	9	15	13	9	5	7	P1.4	common I/O port PORT1[4]
							MISO	Master Iutput Slave Onput of SPI
P1.5/SCLK	10	16	14	10	6	8	P1.5	common I/O port PORT1[5]
							SCLK	Clock Signal of synchronous serial peripheral interface----SPI
P1.6/RxD_3/ MCLKO_2	11	17	15	11	7	9	P1.6	common I/O port PORT1[6]
							RxD_3	Receive Data Port of UART1
							MCLKO_2	Output from the inverting amplifier of internal clock circuit. This pin should be floated when an external oscillator is used.
P1.7/TxD_3	12	18	16	12	8	10	P1.7	common I/O port PORT1[7]
							TxD_3	Transit Data Port of UART1
P2.0/ RSTOUT_LOW	30	36	32	25	21	23	P2.0	common I/O port PORT2[0]
							RSTOUT_LOW	the pin output low after power-on and during reset, which can be set to output high by software
P2.1/SCLK_2	31	37	33	26	22	24	P2.1	common I/O port PORT2[1]
							SCLK_2	Clock Signal of synchronous serial peripheral interface----SPI

STC MCU Limited.

MNEMONIC	Pin Number						DESCRIPTION	
	LQFP44	PLCC44	PDIP40	SOP32	LQFP32	SOP28 SKDIP28		
P2.2/MISO_2	32	38	34	27	23	25	P2.2	common I/O port PORT2[2]
							MISO_2	Master Iutput Slave Onput of SPI
P2.3/MOSI_2	33	39	35	28	24	26	P2.3	common I/O port PORT2[3]
							MOSI_2	Master Output Slave Input of SPI
P2.4/SS_2	34	40	36	29	25	27	P2.4	common I/O port PORT2[4]
							SS_2	Slave selection signal of synchronous serial peripheral interface----SPI
P2.5	35	41	37	30	26	28	common I/O port PORT2[5]	
P2.6	36	42	38	31	27	1	common I/O port PORT2[6]	
P2.7	37	43	39	32	28	2	common I/O port PORT2[7]	
P3.0/RxD/$\overline{\text{INT4}}$ /T2CLKO	18	24	21	17	13	15	P3.0	common I/O port PORT3[0]
							RxD	Receive Data Port of UART1
							$\overline{\text{INT4}}$	External interrupt 4, which only can be generated on falling edge. /INT4 supports power-down waking-up
							T2CLKO	T2 Clock Output The pin can be configured for T2CLKO by setting INT_CLKO[2] bit /T2CLKO
P3.1/TxD/T2	19	25	22	18	14	16	P3.1	common I/O port PORT3[1]
							TxD	Transit Data Port of UART1
							T2	External input of Timer/Counter 2
P3.2/INT0	20	26	23	19	15	17	P3.2	common I/O port PORT3[2]
							INT0	External interrupt 0, which both can be generated on rising and falling edge. INT0 only can generate interrupt on falling edge if IT0 (TCON.0) is set to 1. And, INT0 both can generate interrupt on rising and falling edge if IT0 (TCON.0) is set to 0.
P3.3/INT1	21	27	24	20	16	18	P3.3	common I/O port PORT3[3]
							INT1	External interrupt 1, which both can be generated on rising and falling edge. INT1 only can generate interrupt on falling edge if IT1 (TCON.2) is set to 1. And, INT1 both can generate interrupt on rising and falling edge if IT1 (TCON.2) is set to 0. INT1 supports power-down waking-up
P3.4/T0/ T1CLKO	22	28	25	21	17	19	P3.4	common I/O port PORT3[4]
							T0	External input of Timer/Counter 0
							T1CLKO	T1 Clock Output The pin can be configured for T1CLKO by setting INT_CLKO[1] bit /T1CLKO

STC MCU Limited.

MNEMONIC	Pin Number						DESCRIPTION	
	LQFP44	PLCC44	PDIP40	SOP32	LQFP32	SOP28 SKDIP28		
P3.5/T1/ T0CLKO	23	29	26	22	18	20	P3.5	common I/O port PORT3[5]
							T1	External input of Timer/Counter 1
							T0CLKO	T0 Clock Output The pin can be configured for T0CLKO by setting INT_CLKO[0] bit /T0CLKO
P3.6/$\overline{INT2}$ /RxD_2	24	30	27	23	19	21	P3.6	common I/O port PORT3[6]
							$\overline{INT2}$	External interrupt 2, which only can be generated on falling edge. /INT2 supports power-down waking-up
							RxD_2	Receive Data Port of UART1
P3.7/$\overline{INT3}$ /TxD_2	25	31	28	24	20	22	P3.7	common I/O port PORT3[7]
							$\overline{INT3}$	External interrupt 3, which only can be generated on falling edge. /INT3 supports power-down waking-up
							TxD_2	Transit Data Port of UART1
P4.0	17	23	-	-	-	-	common I/O port PORT4[0]	
P4.1	26	32	29	-	-	-	common I/O port PORT4[1]	
P4.2/$\overline{WR}$	27	33	30	-	-	-	P4.2	common I/O port PORT4[2]
							$\overline{WR}$	Write pulse of external data memory
P4.3	28	34	-	-	-	-	common I/O port PORT4[3]	
P4.4/$\overline{RD}$	29	35	31	-	-	-	P4.4	common I/O port PORT4[4]
							$\overline{RD}$	Read pulse of external data memory
P4.5/ALE	38	44	40	-	-	-	P4.5	common I/O port PORT4[5]
							ALE	Address Latch Enable. It is used for external data memory cycles (MOVX)
P4.6	39	1	-	-	-	-	common I/O port PORT4[6]	
P4.7	6	12	-	-	-	-	common I/O port PORT4[7]	
P5.4/RST/ MCLKO/CMP-	13	19	17	13	9	11	P5.4	common I/O port PORT5[4]
							RST	Reset pin. A high on this pin for at least two machine cycles will reset the device.
							MCLKO	Master clock output; the output frequency can be MCLK/1, MCLK/2 and MCLK/4. The master clock can either be internal R/C clock or the external input clock or the external crystal oscillator.
							CMP-	Comparator negative input
P5.5/CMP+	15	21	19	15	11	13	P5.5	common I/O port PORT5[5]
							CMP+	Comparator positive input
Vcc	14	20	18	14	10	12	The positive pole of power	
Gnd	16	22	20	16	12	14	The negative pole of power, Gound	

STC MCU Limited

1.7 General Overview of STC15W1K16S series MCU

1.7.1 Introduction of STC15W1K16S series MCU (In abundant supply)

STC15W1K16S series MCU is a single-chip microcontroller based on a high performance 1T architecture 8051 CPU, which is produced by STC MCU Limited. It is a new generation of 8051 MCU of high speed, high stability, wide voltage range, low power consumption and super strong anti-disturbance. Besides, STC15W1K16S series MCU is a MCU of super advanced encryption, because it adopts the ninth generation of STC encryption technology. With the enhanced kernel, STC15W1K16S series MCU is faster than a traditional 8051 in executing instructions (about 8~12 times the rate of a traditional 8051 MCU), and has a fully compatible instruction set with traditional 8051 series microcontroller. External expensive crystal can be removed by being integrated internal high-precise R/C clock(±0.3%) with ±1% temperature drift (-40℃~+85℃) while ±0.6% in normal temperature (-20℃~+65℃) and wide frenquency adjustable between 5MHz and 35MHz. External reset curcuit also can be removed by being integrated internal highly reliable one with 16 levels optional threshold voltage of reset. The STC15W1K16S series MCU retains all features of the traditional 8051. In addition, it has three Timers/Counters, a power-down wake-up Timer, dual DPTR and a high-speed asynchronous serial port----UART(can be regarded as 3 serial ports by shifting among 3 groups of pins) and a high-speed synchronous serial peripheral interface----SPI. STC15W1K16S series MCU is usually used in serial communication or electrical control or some occasion with strong disturbance.

In Keil C development environment, select the Intel 8052 to compiling and only contain < reg51.h > as header file.

STC15 series MCU with super high-speed CPU core of STC-Y5 works 20% faster than STC early 1T series (such as STC12/STC11/STC10 series) at same clock frequency.

- Enhanced 8051 Central Processing Unit, 1T, single clock per machine cycle, faster 8~12 times than the rate of a traditional 8051.
- Operating voltage range: 5.5V ~ 2.5V
- On-chip 16K/24K/29/31.5K FLASH program memory with flexible ISP/IAP capability, can be repeatedly erased more than 100 thousand times.
- Large capacity of on-chip 1024 bytes SRAM: 256 byte scratch-pad RAM and 768 bytes of auxiliary RAM
- Be capable of addressing up to 64K byte of external RAM
- On-chip EEPROM with large capacity can be repeatedly erased more than 100 thousand times.
- Dual Data Pointer (DPTR) to speed up data movement
- ISP/IAP, In-System-Programming and In-Application-Programming , no need for programmer and emulator.
- Internal hghly reliable Reset with 8 levels optional threshold voltage of reset, external reset curcuit can be completely removed
- Internal high- precise R/C clock with ±1% temperature drift(-40℃~+85℃) while 5‰ in normal temperature and wide frenquency adjustable between 5MHz and 35MHz (5.5296MHz / 11.0592MHz / 22.1184MHz / 33.1776MHz).
- Internal high- precise R/C clock(±0.3%) with ±1% temperature drift (-40℃~+85℃) while ±0.6% (-20℃~+65℃) in normal temperature and wide frenquency adjustable between 5MHz and 35MHz (5.5296MHz / 11.0592MHz / 22.1184MHz / 33.1776MHz)
- No need external crystal and reset, and can output clock and low reset signal from MCU.

STC MCU Limited.

- Operating frequency range: 5- 35MHz, is equivalent to traditional 8051:60~420MHz.
- A high-speed asynchronous serial port----UART(can be used simultaneously and regarded as 3 serial ports by shifting among 3 groups of pins):
  UART1(RxD/P3.0, TxD/P3.1) can be switched to (RxD_2/P3.6, TxD_2/P3.7),
  also can be switched to (RxD_3/P1.6, TxD_3/P1.7).
- A high-speed synchronous serial peripheral interface----SPI.
- Support the function of Encryption Download (to protect your code from being intercepted).
- Support the function of RS485 Control
- Code protection for flash memory access, excellent noise immunity, very low power consumption
- Power management mode: Slow-Down mode, Idle mode(all interrupt can wake up Idle mode), Stop/Power-Down mode.
- Timers which can wake up stop/power-down mode: have internal low-power special wake-up Timer.
- Resource which can wake up stop/power-down mode are: INT0/P3.2, INT1/P3.3 (INT0/INT1, may be generated on both rising and falling edges), $\overline{\text{INT2}}$/P3.6, $\overline{\text{INT3}}$/P3.7, $\overline{\text{INT4}}$/P3.0 ($\overline{\text{INT2}}$/$\overline{\text{INT3}}$/$\overline{\text{INT4}}$, only be generated on falling edge); pins RxD; pins T0/T1/T2(their falling edge can wake up if T0/T1/T2 have been enabled before power-down mode, but no interrupts can be generatetd); internal low-power special wake-up Timer.
- threee 16-bit reloadable Timers/Counters(T0/T1/T2, T0 and T1 are compatible with Timer0/Timer1 of traditional 8051), T0/T1/T2 all can independently achieve external programmable clock output (3 channels).
- Programmable clock output function(output by dividing the frequency of the internal system clock or the input clock of external pin):
  The speed of external programmable clock output of 5V MCU is also not more than 13.5MHz, because the output speed of I/O port of STC15 series 5V MCU is not more than 13.5MHz.
  The speed of external programmable clock output of 3.3V MCU is also not more than 8MHz, because the output speed of I/O port of STC15 series 3.3V MCU is not more than 8MHz.
  ① The Programmable clock output of T0 is on P3.5/T0CLKO (output by dividing the frequency of the internal system clock or the input clock of external pin T0/P3.4)
  ② The Programmable clock output of T1 is on P3.4/T1CLKO (output by dividing the frequency of the internal system clock or the input clock of external pin T1/P3.5)
  ③ The Programmable clock output of T2 is on P3.0/T2CLKO (output by dividing the frequency of the internal system clock or the input clock of external pin T2/P3.1)
  Three timers/counters in above all can be output by dividing the frequency from 1 to 65536.
  ④ The Programmable clock output of master clock is on P5.4/MCLKO or P1.6/XTAL2/MCLKO_2, and its frequency can be divided into MCLK/1, MCLK/2, MCLK/4.
  The master clock can either be internal R/C clock or the external input clock or the external crystal oscillator.
  MCLK is the frequency of master clock. MCLKO is the output of master clock.
  It is on MCLKO/P3.4 that the Programmable clock output of master clock of STC15 series 8-pin MCU

STC MCU Limited.

(such as STC15F101W series). However, it is on MCLKO/P5.4 that the Programmable clock output of master clock of other STC15 series MCU including 16-pin or more than 16-pin MCU(such as STC15F2K60S2, STC15W4K32S4 and so on)

- Comparator, which support comparing by external pin CMP+ and CMP- or internal reference voltage and generating output signal (its polarity can be configured) on CMPO pin can be used as 1 channel ADC or brownout detect function.
- One 15 bits Watch-Dog-Timer with 8-bit pre-scaler (one-time-enabled)
- advanced instruction set, which is fully compatible with traditional 8051 MCU, have hardware multiplication / division command.
- 42/38/30/26 common I/O ports are available, their mode is quasi_bidirectional/weak pull-up (traditional 8051 I/O ports mode) after reset, and can be set to four modes: quasi_bidirectional/weak pull-up, strong push-pull/ strong pull-up, input-only/high-impedance and open drain.
  the driving ability of each I/O port can be up to 20mA, but it don't exceed this maximum 120mA that the current of the whole chip of 40-pin or more than 40-pin MCU, while 90mA that the current of the whole chip of 16-pin or more than 16-pin MCU or 32-pin or less than 32-pin MCU.
  If I/O ports are not enough, it can be extended by connecting a 74HC595(reference price: RMB 0.15 yuan). Besides, cascading several chips also can extend to dozens of I/O ports.
- Package : LQFP44(12mm x 12mm), PDIP40, LQFP32(9mm x 9mm),QFN32(5mm x 5mm),SOP28, SKDIP28, TSSOP20 (6.5mm x6.5mm)
- All products are baked 8 hours in high-temperature 175℃ after be packaged, Manufacture guarantee good quality.
- In Keil C development environment, select the Intel 8052 to compiling and only contain < reg51.h > as header file.

STC MCU Limited.

1.7.2 Block diagram of STC15W1K16S series

The internal structure of STC15W1K16S series MCU is shown in the block diagram below. STC15W1K16S series MCU includes central processor unit(CPU), program memory (Flash), data memory(SRAM), Timers/ Counters, power-down wake-up Timer, I/O ports, Comparator, Watchdog, high-speed asynchronous serial communication ports---UART, a group of high-speed synchronous serial peripheral interface (SPI), internal high-precise R/C clock, internal hghly reliable Reset and so on. STC15W1K16S series MCU almost includes all of the modules required in data acquisition and control, and can be regarded as an on-chip system (SysTem Chip or SysTem on Chip, abbreviated as STC, this is the name origin of Hongjing technology STC Limited).

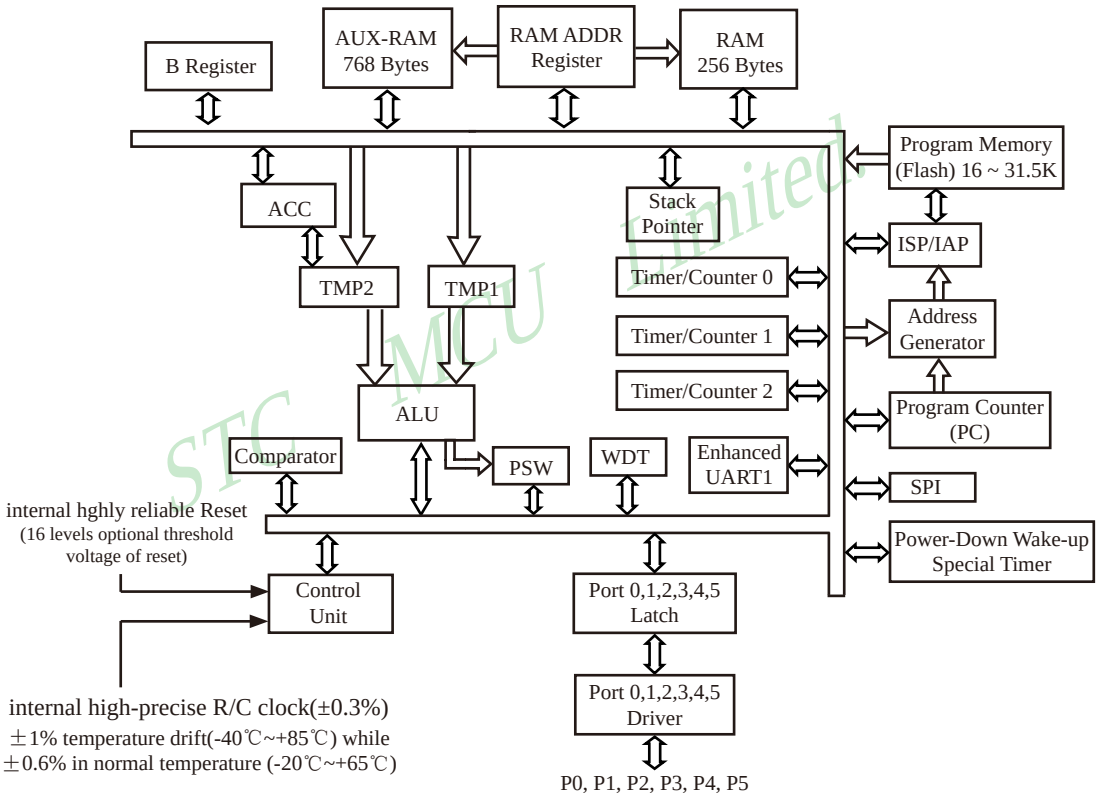

STC15W1K16S series Block Diagram

1.7.3 Pin Configurations of STC15W1K16S series MCU

LQFP44(12x12mm)

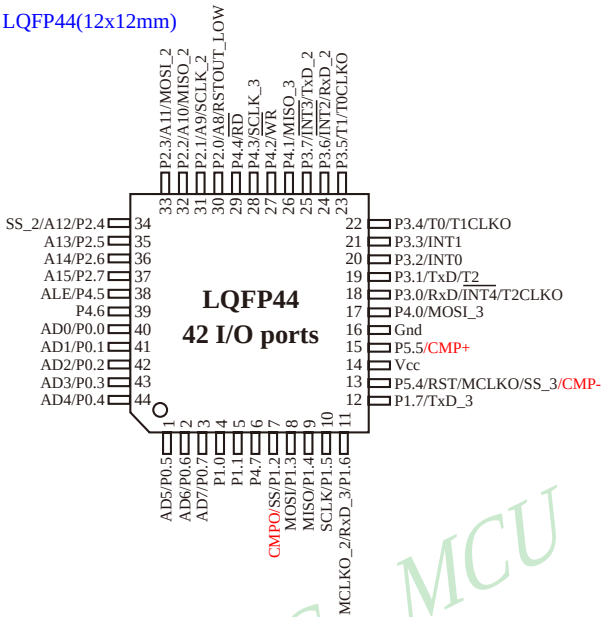

All packages meet EU RoHS standards

T0CLKO refers to the programmable clock output of Timer/Counter 0
(output by dividing the frequency of the internal system clock or the input clock of external pin T0/P3.4);

T1CLKO refers to the programmable clock output of Timer/Counter 1
(output by dividing the frequency of the internal system clock or the input clock of external pin T1/P3.5);

T2CLKO refers to the programmable clock output of Timer/Counter 2
(output by dividing the frequency of the internal system clock or the input clock of external pin T2/P3.1);

In addition to programmable output on the internal system clock, T0CLKO/T1CLKO/T2CLKO also can be used as divider by dividing the frequency of the internal system clock or the input clock of external pin T0/T1/T2.

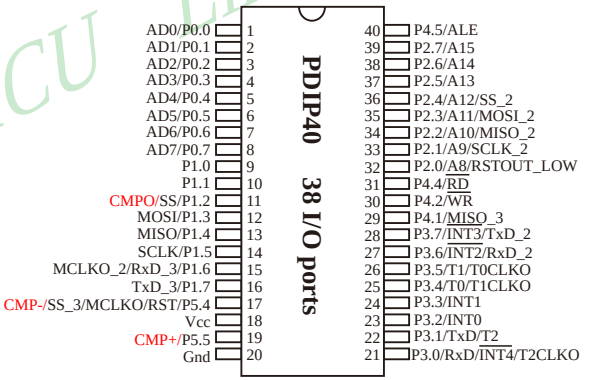

Note：P0 ports can be multiplexed as Address/Data bus，not as A/D Converter. P0.x/ADx means that P0.x can be used as Address/Data bus in the pin map.

Recommend UART1 on [P3.6/RxD_2, P3.7/TxD_2] or [P1.6/RxD_3/XTAL2, P1.7/TxD_3/XTAL1]

MCLKO is the output of master clock whose frequency can be divided into MCLK/1, MCLK/2, MCLK/4
The master clock can either be internal R/C clock or the external input clock or the external crystal oscillator. MCLK is the frequency of master clock.

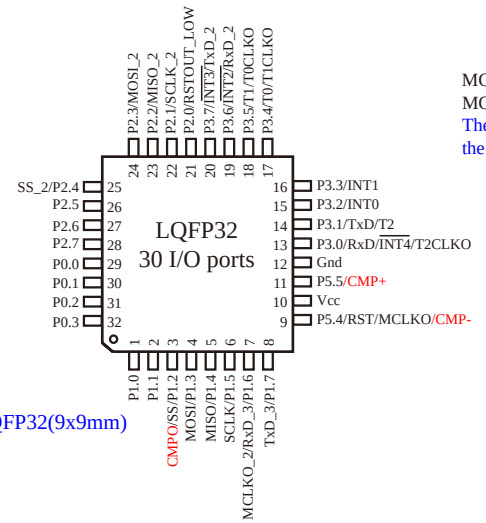

LQFP32(9x9mm)

The speed of external programmable clock output of 5V MCU is also not more than 13.5MHz, because the output speed of I/O port of STC15 series 5V MCU is not more than 13.5MHz.

The speed of external programmable clock output of 3.3V MCU is also not more than 8MHz, because the output speed of I/O port of STC15 series 3.3V MCU is not more than 8MHz.

STC MCU Limited

MCLKO is the output of master clock whose frequency can be divided into MCLK/1, MCLK/2, MCLK/4

The master clock can either be internal R/C clock or the external input clock or the external crystal oscillator. MCLK is the frequency of master clock.

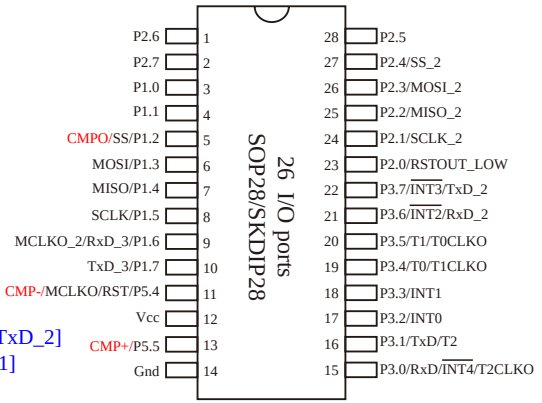

Recommend UART1 on [P3.6/RxD_2, P3.7/TxD_2] or [P1.6/RxD_3/XTAL2, P1.7/TxD_3/XTAL1]

The speed of external programmable clock output of 5V MCU is also not more than 13.5MHz, because the output speed of I/O port of STC15 series 5V MCU is not more than 13.5MHz.

The speed of external programmable clock output of 3.3V MCU is also not more than 8MHz, because the output speed of I/O port of STC15 series 3.3V MCU is not more than 8MHz.

T0CLKO refers to the programmable clock output of Timer/Counter 0
(output by dividing the frequency of the internal system clock or the input clock of external pin T0/P3.4);

T1CLKO refers to the programmable clock output of Timer/Counter 1
(output by dividing the frequency of the internal system clock or the input clock of external pin T1/P3.5);

T2CLKO refers to the programmable clock output of Timer/Counter 2
(output by dividing the frequency of the internal system clock or the input clock of external pin T2/P3.1);

In addition to programmable output on the internal system clock, T0CLKO/T1CLKO/T2CLKO also can be used as divider by dividing the frequency of the internal system clock or the input clock of external pin T0/T1/T2.

STC MCU Limited.

Mnemonic	Add	Name	7	6	5	4	3	2	1	0	Reset Value
AUXR1 P_SW1	A2H	Auxiliary register 1	S1_S1	S1_S0	CCP_S1	CCP_S0	SPI_S1	SPI_S0	0	DPS	00xx,0000
CLK_DIV (PCON2)	97H	Clock Division register	MCKO_S1	MCKO_S0	ADRJ	Tx_Rx	MCLKO_2	CLKS2	CLKS1	CLKS0	0000,0000

UART1/S1 can be switched in 3 groups of pins by selecting the control bits S1_S0 and S1_S1.		
S1_S1	S1_S0	UART1/S1 can be switched between P1 and P3
0	0	UART1/S1 on [P3.0/RxD,P3.1/TxD]
0	1	UART1/S1 on [P3.6/RxD_2,P3.7/TxD_2]
1	0	UART1/S1 on [P1.6/RxD_3/XTAL2,P1.7/TxD_3/XTAL1] when UART1 is on P1, please using internal R/C clock.
1	1	Invalid

Recommed UART1 on [P3.6/RxD_2,P3.7/TxD_2] or [P1.6/RxD_3/XTAL2,P1.7/TxD_3/XTAL1].

Mnemonic	Add	Name	7	6	5	4	3	2	1	0	Reset Value
AUXR1 P_SW1	A2H	Auxiliary register 1	S1_S1	S1_S0	CCP_S1	CCP_S0	SPI_S1	SPI_S0	0	DPS	00xx,0000
CLK_DIV (PCON2)	97H	Clock Division register	MCKO_S1	MCKO_S0	ADRJ	Tx_Rx	MCLKO_2	CLKS2	CLKS1	CLKS0	0000,0000

SPI can be switched in 3 groups of pins by selecting the control bits SPI_S1 and SPI_S0		
SPI_S1	SPI_S0	SPI can be switched in P1, P2 and P4
0	0	SPI on [P1.2/SS, P1.3/MOSI, P1.4/MISO, P1.5/SCLK]
0	1	SPI on [P2.4/SS_2, P2.3/MOSI_2, P2.2/MISO_2, P2.1/SCLK_2]
1	0	SPI on [P5.4/SS_3, P4.0/MOSI_3, P4.1/MISO_3, P4.3/SCLK_3]
1	1	Invalid

DPS：DPTR registers select bit.

0: DPTR0 is selected

1: DPTR1 is selected

MCKO_S1	MCKO_S0	the control bit of master clock output by dividing the frequency (The master clock can either be internal R/C clock or the external input clock or the external crystal oscillator)
0	0	Master clock do not output external clock
0	1	Master clock output external clock，but its frequency do not be divided，and the output clock frequency = MCLK / 1
1	0	Master clock output external clock，but its frequency is divided by 2，and the output clock frequency = MCLK / 2
1	1	Master clock output external clock，but its frequency is divided by 4，and the output clock frequency = MCLK / 4

The master clock can either be internal R/C clock or the external input clock or the external crystal oscillator.

MCLK is the frequency of master clock.

STC15W1K16S series MCU output master clock on MCLKO/P5.4

It is on MCLKO/P3.4 that the Programmable clock output of master clock of STC15 series 8-pin MCU (such as STC15F101W series). However, it is on MCLKO/P5.4 that the Programmable clock output of master clock of other STC15 series MCU including 16-pin or more than 16-pin MCU.

MCLKO_2：to select Master Clock output on where

0：Master Clock output on MCLKO/P5.4

1：Master Clock output on MCLKO_2/XTAL2/P1.6

The master clock can either be internal R/C clock or the external input clock or the external crystal oscillator.

Tx_Rx：the set bit of relay and broadcast mode of UART1

0：UART1 works on normal mode

1：UART1 works on relay and broadcast mode，that to say output the input level state of RxD port to the outside TxD pin in real time, namely the external output of TxD pin can reflect the input level state of RxD port.

the RxD and TxD of UART1 can be switched in 3 groups of pins: [RxD/P3.0, TxD/P3.1];
[RxD_2/P3.6, TxD_2/P3.7];
[RxD_3/P1.6, TxD_3/P1.7].

STC MCU Limited.

Mnemonic	Add	Name	7	6	5	4	3	2	1	0	Reset Value
CLK_DIV (PCON2)	97H	Clock Division register	MCKO_S1	MCKO_S0	ADRJ	Tx_Rx	MCLKO_2	CLKS2	CLKS1	CLKS0	0000,0000

CLKS2	CLKS1	CLKS0	the control bit of system clock (System clock refers to the master clock that has been divided frequency, which is offered to CPU, UARTs, SPI, Timers, CCP/PWM/PCA and A/D Converter)
0	0	0	Master clock frequency/1, No division
0	0	1	Master clock frequency/2
0	1	0	Master clock frequency/4
0	1	1	Master clock frequency/8
1	0	0	Master clock frequency/16
1	0	1	Master clock frequency/32
1	1	0	Master clock frequency/64
1	1	1	Master clock frequency/128

The master clock can either be internal R/C clock or the external input clock or the external crystal oscillator.

STC MCU Limited.

1.7.4 STC15W1K16S series Selection and Price Table

Type 1T 8051 MCU	Operating Voltage (V)	Flash (byte)	SRAM (byte)	UART	SPI	common Timers T0-T2	CCP PCA PWM	Speical Power-down Wake-up Timer	Standard External Interrupts	A/D 8-channel	COMPARATOR	DPTR	EEPROM	Internal Low-Voltage Detection Interrupt	WDT	Internal High-reliable Reset (with optional threshold voltage)	Internal High-Precise Clock	Output clock and reset signal from MCU	Encryption Download (to protect your code from being intercepted)	RS485 Control	All Packages LQFP44/ PDIP40 LQFP32/ QFN32 SOP28/ SKDIP28 Price of a part of packages(RMB ¥) LQFP44	SOP28
STC15W1K16S series MCU Selection and Price Table																						
STC15W1K16S	5.5-2.6	16K	1K	1	Y	3	N	Y	5	N	Y	2	13K	Y	Y	16-level	Y	Y	Y	Y	¥3.5	¥3.3
STC15W1K24S	5.5-2.6	24K	1K	1	Y	3	N	Y	5	N	Y	2	5K	Y	Y	16-level	Y	Y	Y	Y	¥3.8	¥3.6
IAP15W1K29S	5.5-2.6	29K	1K	1	Y	3	N	Y	5	N	Y	2	IAP	Y	Y	16-level	Y	Y	Y	Y	¥3.8 The program Flash in user program area can be used as EEPROM.	¥3.6
IRC15W1K16S (Fixed internal 24MHz clock)	5.5-2.6	31.5K	1K	1	Y	3	N	Y	5	N	Y	2	IAP	Y	Y	Fixed	Y	Y	N	N	¥3.8 The program Flash in user program area can be used as EEPROM.	¥3.6

Encryption Download : please burn source code with encryption key onto MCU in the factory. Then, you can make a simple update software just with one "update" button by fisrtly using the fuction "encrytion download" and then "release project" to update yourself code unabled to be intercepted when you need to upgrade your code.

To provide customized IC services

Because the last 7 bytes of the program area is stored mandatorily the contents of only global ID, the program space the user can actually use is 7 bytes smaller than the space shown in the selection table.

Conclusion : STC15W1K16S series MCU have: Three 16-bit relaodable Timers/Counters that are Timer/Counter 0, Timer/Counter 1 and Timer/Counter 2; 5 external interrupts INT0/INT1/$\overline{\text{INT2}}$/$\overline{\text{INT3}}$/$\overline{\text{INT4}}$; 1 high-speed asynchronous serial port ---- UART; a high-speed synchronous serial peripheral interface ---- SPI; 1 Comparator; 2 data pointers ---- DPTR; external data bus and so on.

STC MCU Limited.

1.7.5 STC15W1K16S series Package and Price Table

Type 1T 8051 MCU	Operating Voltage (V)	Operating Frequency (MHz)	Operating Temprature (I — Industrial)	All Packages Price(RMB ¥) LQFP44 / PDIP40 / LQFP32 / QFN32/SOP28 / SKDIP28 / TSSOP20						
				LQFP44	PDIP40	LQFP32	QFN32	SOP28	SKDIP28	TSSOP20
STC15W1K16S series MCU Package and Price Table										
STC15W1K16S	5.5-2.6	35	-40℃ ~ +85℃	¥3.5	¥4.0	¥3.4		¥3.3	¥3.5	
STC15W1K24S	5.5-2.6	35	-40℃ ~ +85℃	¥3.8	¥4.3	¥3.7		¥3.6	¥3.8	¥3.6
IAP15W1K29S	5.5-2.6	35	-40℃ ~ +85℃	¥3.8	¥4.3	¥3.7	¥3.65	¥3.6	¥3.8	¥3.6
IRC15W1K31S	5.5-2.6	35	-40℃ ~ +85℃	¥3.8	¥4.3	¥3.7		¥3.6	¥3.8	

1.7.6 Naming rules of STC15W1K16S series MCU

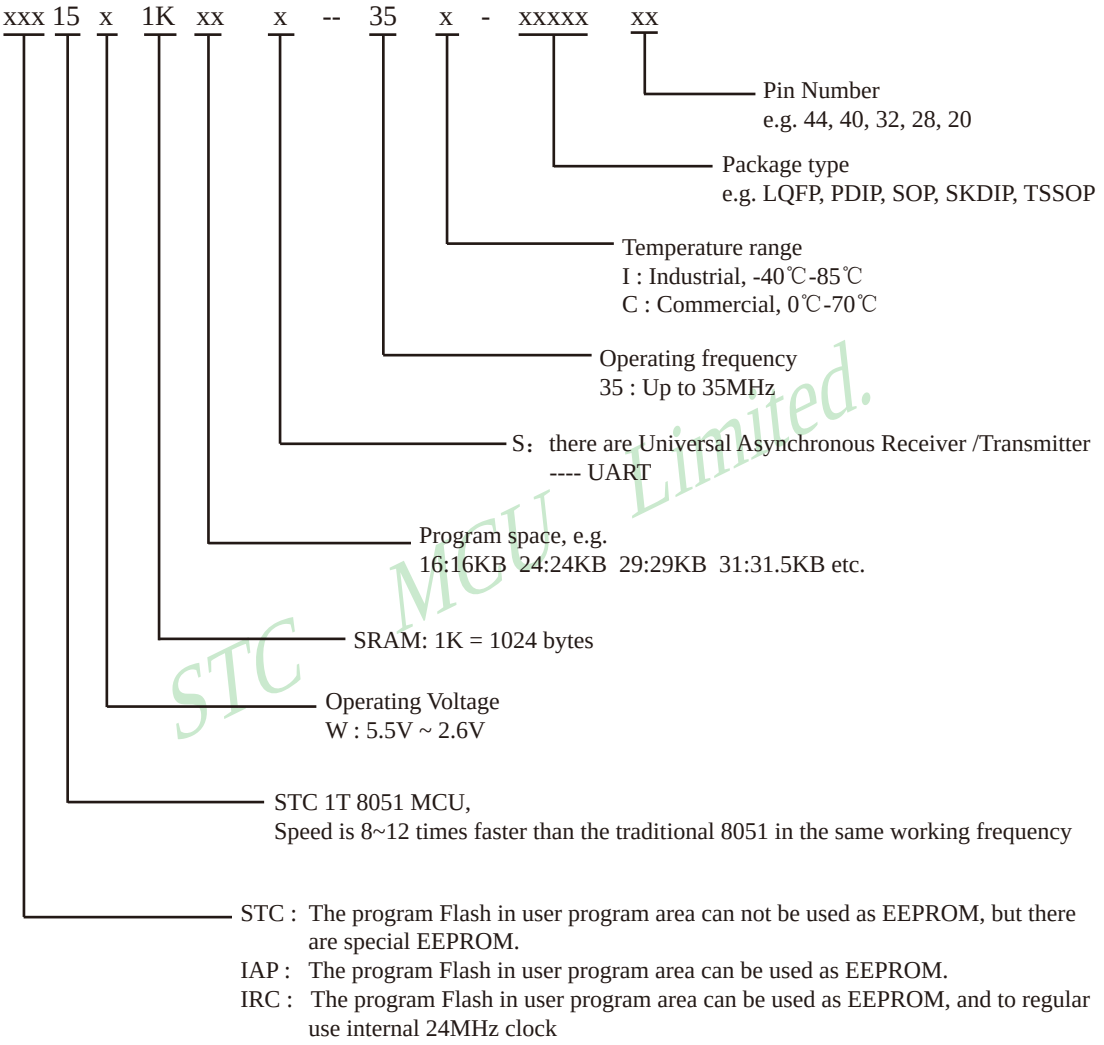

STC MCU Limited.

1.7.7 Application Circuit Diagram for ISP of STC15W1K16S series MCU

1.7.7.1 Application Circuit Diagram for ISP using RS-232 Converter

Note：P0 ports can be multiplexed as Address/Data bus，not as A/D Converter.

P0.x/ADx means that P0.x can be used as Address/Data busin the pin map.

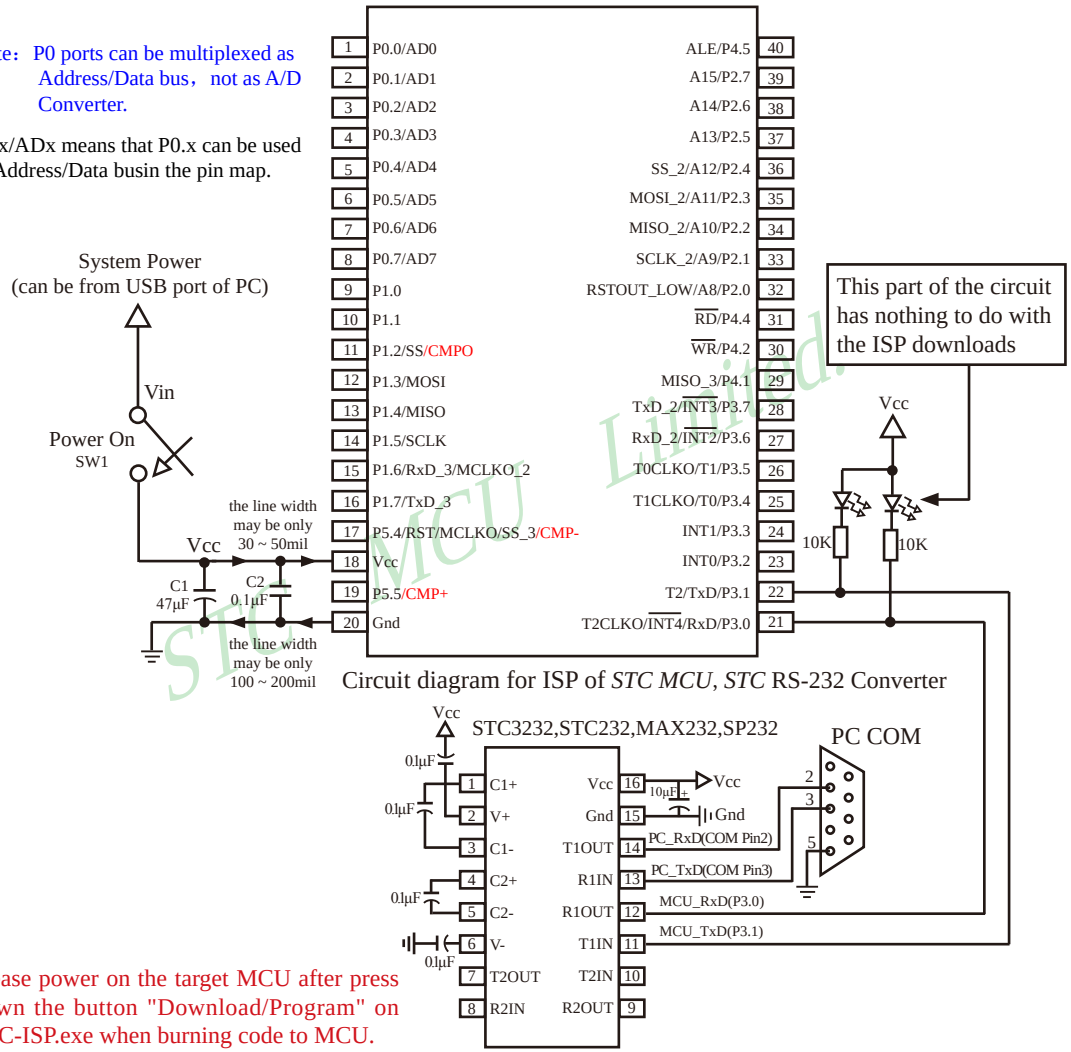

Please power on the target MCU after press down the button "Download/Program" on STC-ISP.exe when burning code to MCU.

Internal hghly reliable Reset, External reset circuit can be completely removed.

P5.4/RST/MCLKO pin factory defaults to the I/O port, which can be set as RST reset pin(active high) through the STC-ISP programmer.

Internal high-precise R/C clock(±3%), ±1% temperature drift (-40℃~+85℃) while ±0.6% in normal temperature (-20℃~+65℃). External expensive crysal can be completely removed.

Recommend to add decoupling capacitor C1(47μF) and C2(0.1μF) between Vcc and Gnd that can remove power noise and improve the anti-interference ability.

1.7.7.2 Application Circuit Diagram for ISP using USB Chip PL-2303SA to convert Serial Port

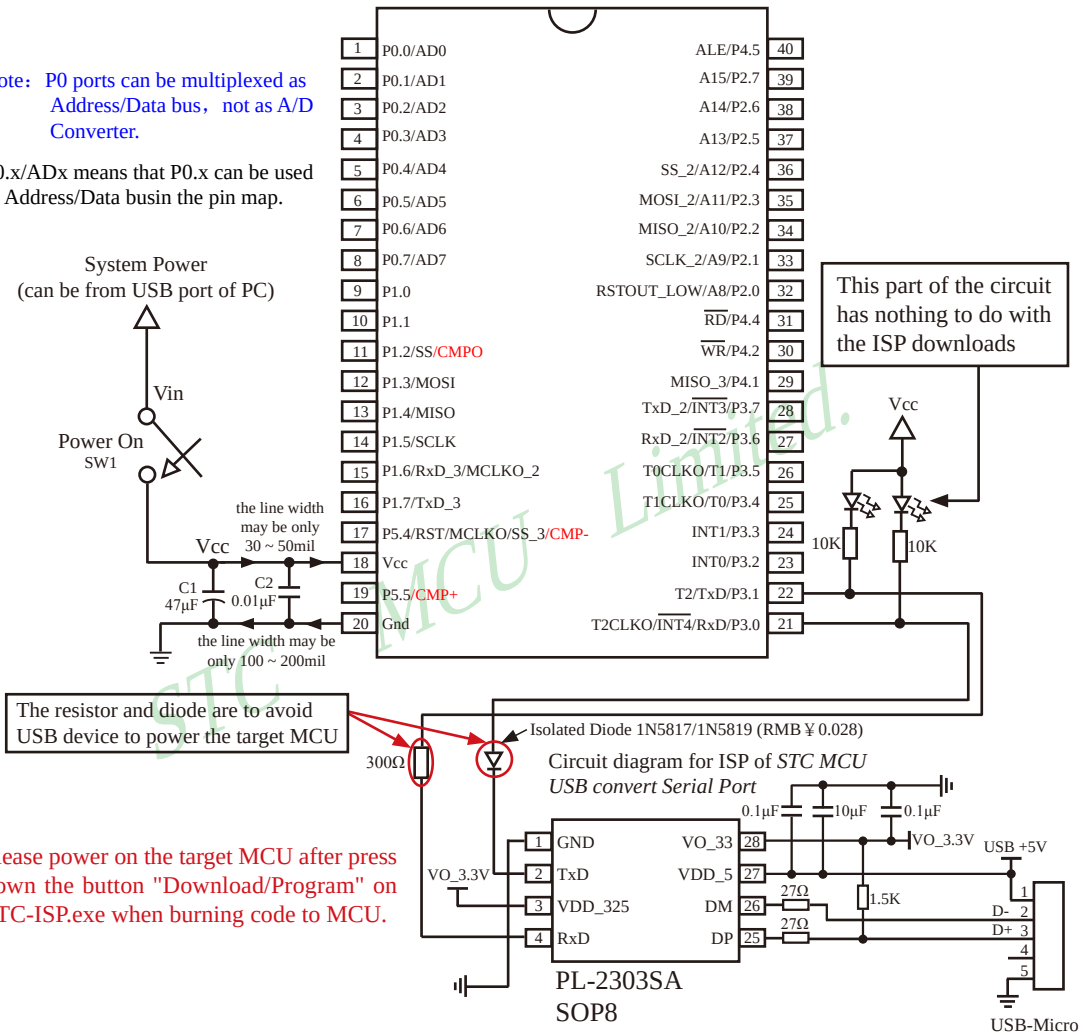

Internal hghly reliable Reset, External reset circuit can be completely removed.

P5.4/RST/MCLKO pin factory defaults to the I/O port, which can be set as RST reset pin(active high) through the STC-ISP programmer.

Internal high-precise R/C clock(±3%), ±1% temperature drift (-40℃~+85℃) while ±0.6% in normal temperature (-20℃~+65℃). External expensive crysal can be completely removed.

Recommend to add decoupling capacitor C1(47μF) and C2(0.1μF) between Vcc and Gnd that can remove power noise and improve the anti-interference ability.

1.7.7.3 Application Circuit Diagram for ISP using USB Chip PL-2303HXD / PL-2303HX to convert Serial Port

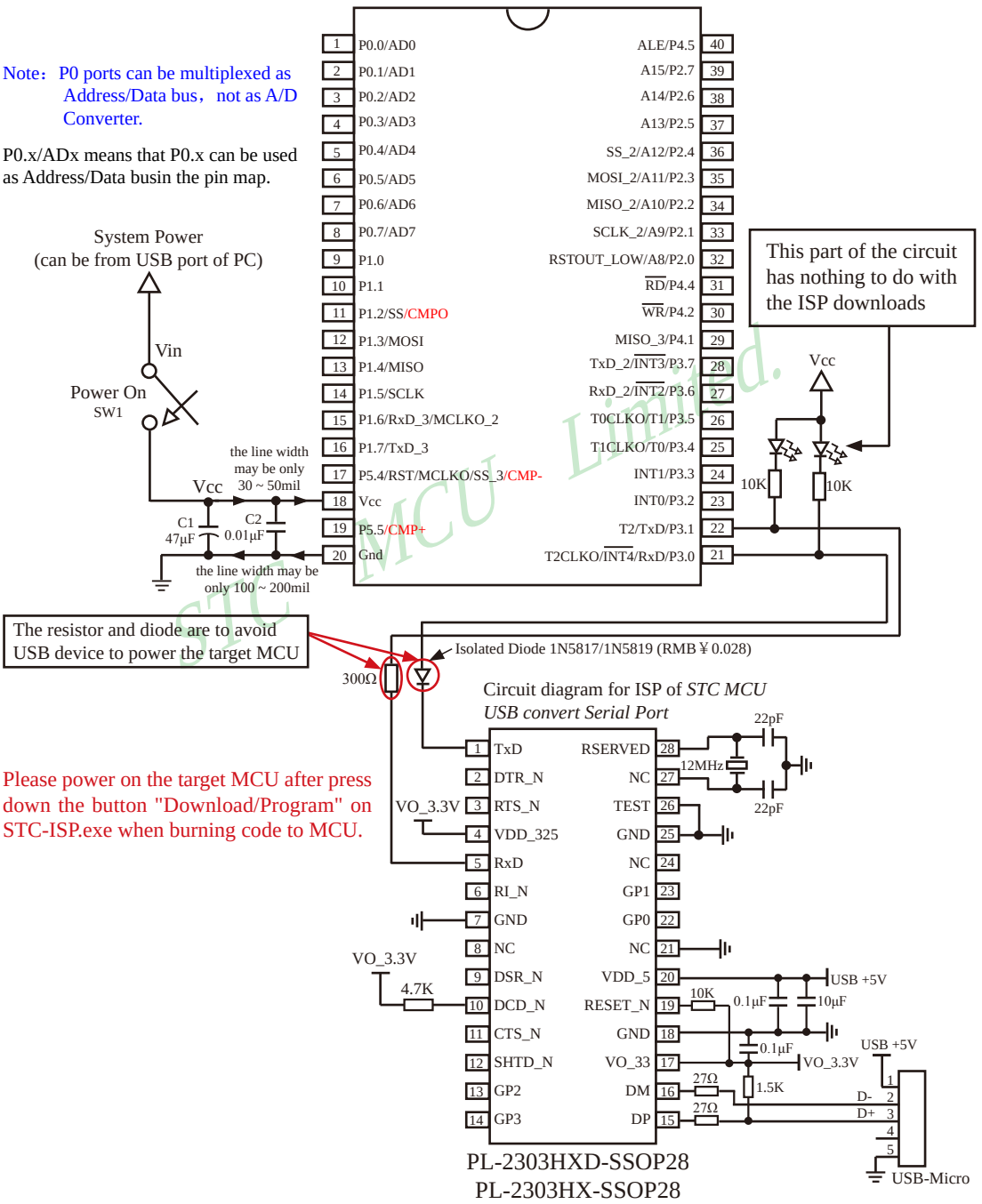

STC MCU Limited.

1.7.8 Pin Descriptions of STC15W1K16S series MCU

MNEMONIC	Pin Number							DESCRIPTION	
	LQFP44	PLCC44	PDIP40	SOP32	LQFP32	SOP28 SKDIP28	TSSOP20		
P0.0/AD0	40	2	1	1	29	-	-	P0.0	common I/O port PORT0[0]
P0.1/AD1	41	3	2	2	30	-	-	P0.1	common I/O port PORT0[1]
P0.2/AD2	42	4	3	3	31	-	-	P0.2	common I/O port PORT0[2]
P0.3/AD3	43	5	4	4	32	-	-	P0.3	common I/O port PORT0[3]
P0.4/AD4	44	6	5	-	-	-	-	P0.4	common I/O port PORT0[4]
P0.5/AD5	1	7	6	-	-	-	-	P0.5	common I/O port PORT0[5]
P0.6/AD5	2	8	7	-	-	-	-	P0.6	common I/O port PORT0[6]
P0.7/AD7	3	9	8	-	-	-	-	P0.7	common I/O port PORT0[7]
P1.0	4	10	9	5	1	3	1	common I/O port PORT1[0]	
P1.1	5	11	10	6	2	4	2	common I/O port PORT1[1]	
P1.2/SS/ CMPO	7	13	11	7	3	5	20	P1.2	common I/O port PORT1[2]
								SS	Slave selection signal of synchronous serial peripheral interface----SPI
								CMPO	The output port of reslut compared by comparator
P1.3/MOSI	8	14	12	8	4	6	19	P1.3	common I/O port PORT1[3]
								MOSI	Master Output Slave Input of SPI
P1.4/MISO	9	15	13	9	5	7	3	P1.4	common I/O port PORT1[4]
								MISO	Master Iutput Slave Onput of SPI
P1.5/SCLK	10	16	14	10	6	8	4	P1.5	common I/O port PORT1[5]
								SCLK	Clock Signal of synchronous serial peripheral interface----SPI
P1.6/RxD_3/ MCLKO_2	11	17	15	11	7	9	5	P1.6	common I/O port PORT1[6]
								RxD_3	Receive Data Port of UART1
								MCLKO_2	Output from the inverting amplifier of internal clock circuit. This pin should be floated when an external oscillator is used.
P1.7/TxD_3	12	18	16	12	8	10	6	P1.7	common I/O port PORT1[7]
								TxD_3	Transit Data Port of UART1
P2.0/ RSTOUT_LOW	30	36	32	25	21	23	-	P2.0	common I/O port PORT2[0]
								RSTOUT_LOW	the pin output low after power-on and during reset, which can be set to output high by software
P2.1/SCLK_2	31	37	33	26	22	24	-	P2.1	common I/O port PORT2[1]
								SCLK_2	Clock Signal of synchronous serial peripheral interface----SPI

STC MCU Limited.

MNEMONIC	Pin Number							DESCRIPTION	
	LQFP44	PLCC44	PDIP40	SOP32	LQFP32	SOP28 SKDIP28	TSSOP20		
P2.2/MISO_2	32	38	34	27	23	25	-	P2.2	common I/O port PORT2[2]
								MISO_2	Master Iutput Slave Onput of SPI
P2.3/MOSI_2	33	39	35	28	24	26	-	P2.3	common I/O port PORT2[3]
								MOSI_2	Master Output Slave Input of SPI
P2.4/SS_2	34	40	36	29	25	27	-	P2.4	common I/O port PORT2[4]
								SS_2	Slave selection signal of synchronous serial peripheral interface----SPI
P2.5	35	41	37	30	26	28	-	common I/O port PORT2[5]	
P2.6	36	42	38	31	27	1	-	common I/O port PORT2[6]	
P2.7	37	43	39	32	28	2	-	common I/O port PORT2[7]	
P3.0/RxD/ $\overline{\text{INT4}}$ /T2CLKO	18	24	21	17	13	15	11	P3.0	common I/O port PORT3[0]
								RxD	Receive Data Port of UART1
								$\overline{\text{INT4}}$	External interrupt 4, which only can be generated on falling edge. /INT4 supports power-down waking-up
								T2CLKO	T2 Clock Output The pin can be configured for T2CLKO by setting INT_CLKO[2] bit /T2CLKO
P3.1/TxD/T2	19	25	22	18	14	16	12	P3.1	common I/O port PORT3[1]
								TxD	Transit Data Port of UART1
								T2	External input of Timer/Counter 2
P3.2/INT0	20	26	23	19	15	17	13	P3.2	common I/O port PORT3[2]
								INT0	External interrupt 0, which both can be generated on rising and falling edge. INT0 only can generate interrupt on falling edge if IT0 (TCON.0) is set to 1. And, INT0 both can generate interrupt on rising and falling edge if IT0 (TCON.0) is set to 0.
P3.3/INT1	21	27	24	20	16	18	14	P3.3	common I/O port PORT3[3]
								INT1	External interrupt 1, which both can be generated on rising and falling edge. INT1 only can generate interrupt on falling edge if IT1 (TCON.2) is set to 1. And, INT1 both can generate interrupt on rising and falling edge if IT1 (TCON.2) is set to 0. INT1 supports power-down waking-up
P3.4/T0/ T1CLKO	22	28	25	21	17	19	15	P3.4	common I/O port PORT3[4]
								T0	External input of Timer/Counter 0
								T1CLKO	T1 Clock Output The pin can be configured for T1CLKO by setting INT_CLKO[1] bit /T1CLKO

STC MCU Limited

MNEMONIC	Pin Number							DESCRIPTION	
	LQFP44	PLCC44	PDIP40	SOP32	LQFP32	SOP28 SKDIP28	TSSOP20		
P3.5/T1/ T0CLKO	23	29	26	22	18	20	16	P3.5	common I/O port PORT3[5]
								T1	External input of Timer/Counter 1
								T0CLKO	T0 Clock Output The pin can be configured for T0CLKO by setting INT_CLKO[0] bit /T0CLKO
P3.6/$\overline{INT2}$ /RxD_2	24	30	27	23	19	21	17	P3.6	common I/O port PORT3[6]
								$\overline{INT2}$	External interrupt 2, which only can be generated on falling edge. /INT2 supports power-down waking-up
								RxD_2	Receive Data Port of UART1
P3.7/$\overline{INT3}$ /TxD_2	25	31	28	24	20	22	18	P3.7	common I/O port PORT3[7]
								$\overline{INT3}$	External interrupt 3, which only can be generated on falling edge. /INT3 supports power-down waking-up
								TxD_2	Transit Data Port of UART1
P4.0	17	23	-	-	-	-	-	common I/O port PORT4[0]	
P4.1	26	32	29	-	-	-	-	common I/O port PORT4[1]	
P4.2/$\overline{WR}$	27	33	30	-	-	-	-	P4.2	common I/O port PORT4[2]
								$\overline{WR}$	Write pulse of external data memory
P4.3	28	34	-	-	-	-	-	common I/O port PORT4[3]	
P4.4/$\overline{RD}$	29	35	31	-	-	-	-	P4.4	common I/O port PORT4[4]
								$\overline{RD}$	Read pulse of external data memory
P4.5/ALE	38	44	40	-	-	-	-	P4.5	common I/O port PORT4[5]
								ALE	Address Latch Enable. It is used for external data memory cycles (MOVX)
P4.6	39	1	-	-	-	-	-	common I/O port PORT4[6]	
P4.7	6	12	-	-	-	-	-	common I/O port PORT4[7]	
P5.4/RST/ MCLKO/ CMP-	13	19	17	13	9	11	7	P5.4	common I/O port PORT5[4]
								RST	Reset pin. A high on this pin for at least two machine cycles will reset the device.
								MCLKO	Master clock output; the output frequency can be MCLK/1, MCLK/2 and MCLK/4. The master clock can either be internal R/C clock or the external input clock or the external crystal oscillator.
								CMP-	Comparator negative input
P5.5/CMP+	15	21	19	15	11	13	9	P5.5	common I/O port PORT5[5]
								CMP+	Comparator positive input
Vcc	14	20	18	14	10	12	8	The positive pole of power	
Gnd	16	22	20	16	12	14	10	The negative pole of power, Gound	

STC MCU Limited.

1.8 General Overview of STC15W4K32S4 series MCU

1.8.1 Introduction of STC15W4K32S4 series MCU

STC15W4K32S4 series MCU is a single-chip microcontroller based on a high performance 1T architecture 8051 CPU, which is produced by STC MCU Limited. It is a new generation of 8051 MCU of high speed, high stability, wide voltage range, low power consumption and super strong anti-disturbance. Besides, STC15W4K32S4 series MCU is a MCU of super advanced encryption, because it adopts the ninth generation of STC encryption technology. With the enhanced kernel, STC15W4K32S4 series MCU is faster than a traditional 8051 in executing instructions (about 8~12 times the rate of a traditional 8051 MCU), and has a fully compatible instruction set with traditional 8051 series microcontroller. External expensive crystal can be removed by being integrated internal high-precise R/C clock(±0.3%) with ±1% temperature drift (-40℃~+85℃) while ±0.6% in normal temperature (-20℃~+65℃) and wide frenquency adjustable between 5MHz and 35MHz. External reset curcuit also can be removed by being integrated internal highly reliable one with 16 levels optional threshold voltage of reset. The STC15W4K32S4 series MCU retains all features of the traditional 8051. In addition, it has 8-channels and 10-bits PWM, 8-channels and 10-bits A/D Converter(300 thousand times per sec.), Comparator, large capacity of 4K bytes SRAM, four high-speed asynchronous serial ports----UARTs(UART1/UART2/UART3/UART4) and a high-speed synchronous serial peripheral interface----SPI. STC15W4K32S4 series MCU is usually used in communications which need for serveral UARTs or electrical control or some occasion with strong disturbance.

In Keil C development environment, select the Intel 8052 to compiling and only contain < reg51.h > as header file.

STC15 series MCU with super high-speed CPU core of STC-Y5 works 20% faster than STC early 1T series (such as STC12/STC11/STC10 series) at same clock frequency.

STC MCU Limited.

- Enhanced 8051 Central Processing Unit, 1T, single clock per machine cycle, faster 8~12 times than the rate of a traditional 8051.
- Operating voltage range : 5.5V ~ 2.5V.
- On-chip 16K/32K/40K/48K/56K/58K/61K/63.5K FLASH program memory with flexible ISP/IAP capability, can be repeatedly erased more than 100 thousand times.
- Large capacity of on-chip 4096 bytes SRAM: 256 byte scratch-pad RAM and 3840 bytes of auxiliary RAM
- Be capable of addressing up to 64K byte of external RAM
- On-chip EEPROM with large capacity can be repeatedly erased more than 100 thousand times.
- Dual Data Pointer (DPTR) to speed up data movement
- ISP/IAP, In-System-Programming and In-Application-Programming , no need for programmer and emulator.
- 8 channels and 10 bits Analog-to-Digital Converter (ADC), the speed up to 300 thousand times per second, 3 channels PWM also can be used as 3 channels D/A Converter(DAC).
- 6 channels 15 bits high-precision PWM (with a dead-section controller) and 2 channels CCP (The high-speed pulse function of which can be utilized to realize 11 ~ 16 bits PWM)
  ---- can be used as 8 channels D/A Converter or 2 Times or 2 external Interrupts (which can be generated on rising or falling edge).
- Internal hghly reliable Reset with 16 levels optional threshold voltage of reset, so that external reset curcuit can be completely removed.

- Internal high- precise R/C clock(±0.3%) with ±1% temperature drift (-40℃~+85℃) while ±0.6% (-20℃~+65℃) in normal temperature and wide frenquency adjustable between 5MHz and 35MHz (5.5296MHz / 11.0592MHz / 22.1184MHz / 33.1776MHz).
- No need external crystal and reset, and can output clock and low reset signal from MCU.
- Operating frequency range: 5- 35MHz, is equivalent to traditional 8051:60~420MHz.
- Four high-speed asynchronous serial ports----UARTs (UART1/UART2/UART3/UART4 can be used simultaneously and regarded as 9 serial ports by shifting among 9 groups of pins):
  UART1(RxD/P3.0, TxD/P3.1) can be switched to (RxD_2/P3.6, TxD_2/P3.7),
  also can be switched to (RxD_3/P1.6, TxD_3/P1.7);
  UART2(RxD2/P1.0, TxD2/P1.1) can be switched to (RxD2_2/P4.6, TxD2_2/P4.7);
  UART3(RxD3/P0.0, TxD3/P0.1)can be switched to (RxD3_2/P5.0, TxD3_2/P5.1)
  UART4(RxD4/P0.2, TxD4/P0.3)can be switched to (RxD4_2/P5.2, TxD4_2/P5.3)
- A high-speed synchronous serial peripheral interface----SPI.
- Support the function of Encryption Download (to protect your code from being intercepted).
- Support the function of RS485 Control
- Code protection for flash memory access, excellent noise immunity, very low power consumption
- Power management mode: Slow-Down mode, Idle mode(all interrupt can wake up Idle mode), Stop/Power-Down mode.
- Timers which can wake up stop/power-down mode: have internal low-power special wake-up Timer.
- Resource which can wake up stop/power-down mode are: INT0/P3.2, INT1/P3.3 (INT0/INT1, may be generated on both rising and falling edges), $\overline{\text{INT2}}$/P3.6, $\overline{\text{INT3}}$/P3.7, $\overline{\text{INT4}}$/P3.0 ($\overline{\text{INT2}}$/$\overline{\text{INT3}}$/$\overline{\text{INT4}}$, only be generated on falling edge); pins CCP0/CCP1; pins RxD/RxD2/RxD3/RxD4; pins T0/T1/T2/T3/T4(their falling edge can wake up if T0/T1/T2/T3/T4 have been enabled before power-down mode, but no interrupts can be generatetd); internal low-power special wake-up Timer.
- 7 Timers/Counters, five 16-bit reloadable Timer/Counter(T0/T1/T2/T3/T4, T0 and T1 are compatible with Timer0/Timer1 of traditional 8051), T0/T1/T2/T3/T4 all can independently achieve external programmable clock output (5 channels), 2 channels CCP/PWM/PCA also can be used as 2 timers.
- Programmable clock output function(output by dividing the frequency of the internal system clock or the input clock of external pin):
  The speed of external programmable clock output of 5V MCU is also not more than 13.5MHz, because the output speed of I/O port of STC15 series 5V MCU is not more than 13.5MHz.
  The speed of external programmable clock output of 3.3V MCU is also not more than 8MHz, because the output speed of I/O port of STC15 series 3.3V MCU is not more than 8MHz.
  ① The Programmable clock output of T0 is on P3.5/T0CLKO (output by dividing the frequency of the internal system clock or the input clock of external pin T0/P3.4)
  ② The Programmable clock output of T1 is on P3.4/T1CLKO (output by dividing the frequency of the internal system clock or the input clock of external pin T1/P3.5)

STC MCU Limited

③ The Programmable clock output of T2 is on P3.0/T2CLKO (output by dividing the frequency of the internal system clock or the input clock of external pin T2/P3.1)

④ The Programmable clock output of T3 is on P0.4/T3CLKO (output by dividing the frequency of the internal system clock or the input clock of external pin T3/P0.5)

⑤ The Programmable clock output of T4 is on P0.6/T4CLKO (output by dividing the frequency of the internal system clock or the input clock of external pin T4/P0.7)

Five timers/counters in above all can be output by dividing the frequency from 1 to 65536.

⑥ The Programmable clock output of master clock is on P5.4/SysClkO, and its frequency can be divided into SysClk/1, SysClk/2, SysClk/4.

The master clock can either be internal R/C clock or the external input clock or the external crystal oscillator.

SysClk is the frequency of master clock. SysClkO is the output of master clock.

- Comparator, which support comparing by external pin CMP+ and CMP- or internal reference voltage and generating output signal (its polarity can be configured) on CMPO pin can be used as 1 channel ADC or brownout detect function.
- One 15 bits Watch-Dog-Timer with 8-bit pre-scaler (one-time-enabled)
- advanced instruction set, which is fully compatible with traditional 8051 MCU, have hardware multiplication / division command.
- 62/46/42/38/30/26 common I/O ports are available, their mode is quasi_bidirectional/weak pull-up (traditional 8051 I/O ports mode) after reset, and can be set to four modes: quasi_bidirectional/weak pull-up, strong push-pull/ strong pull-up, input-only/high-impedance and open drain.

  the driving ability of each I/O port can be up to 20mA, but it don't exceed this maximum 120mA that the current of the whole chip of 40-pin or more than 40-pin MCU, while 90mA that the current of the whole chip of 16-pin or more than 16-pin MCU or 32-pin or less than 32-pin MCU.

  If I/O ports are not enough, it can be extended by connecting a 74HC595(reference price: RMB 0.15 yuan). Besides, cascading several chips also can extend to dozens of I/O ports.
- Package: LQFP64L(16mm x 16mm), LQFP64S(12mm x 12mm), LQFP48(9mm x 9mm), LQFP44(12mm x 12mm), LQFP32(9mm x 9mm), SOP28, SKDIP28, PDIP40.
- All products are baked 8 hours in high-temperature 175℃ after be packaged, Manufacture guarantee good quality.
- In Keil C development environment, select the Intel 8052 to compiling and only contain < reg51.h > as header file.

STC MCU Limited.

1.8.2 Block diagram of STC15W4K32S4 series

The internal structure of STC15W4K32S4 series MCU is shown in the block diagram below. STC15W4K32S4 series MCU includes central processor unit(CPU), program memory (Flash), data memory(SRAM), Timers/ Counters, I/O ports, high-speed A/D converter(ADC), Comparator,Watchdog, high-speed asynchronous serial communication ports---UART(UART1/UART2/UART3/UART4), CCP/PWM/PCA, a group of high-speed synchronous serial peripheral interface (SPI), internal high- precise R/C clock, internal hghly reliable Reset and so on. STC15W4K32S4 series MCU almost includes all of the modules required in data acquisition and control, and can be regarded as an on-chip system (SysTem Chip or SysTem on Chip, abbreviated as STC, this is the name origin of Hongjing technology STC Limited).

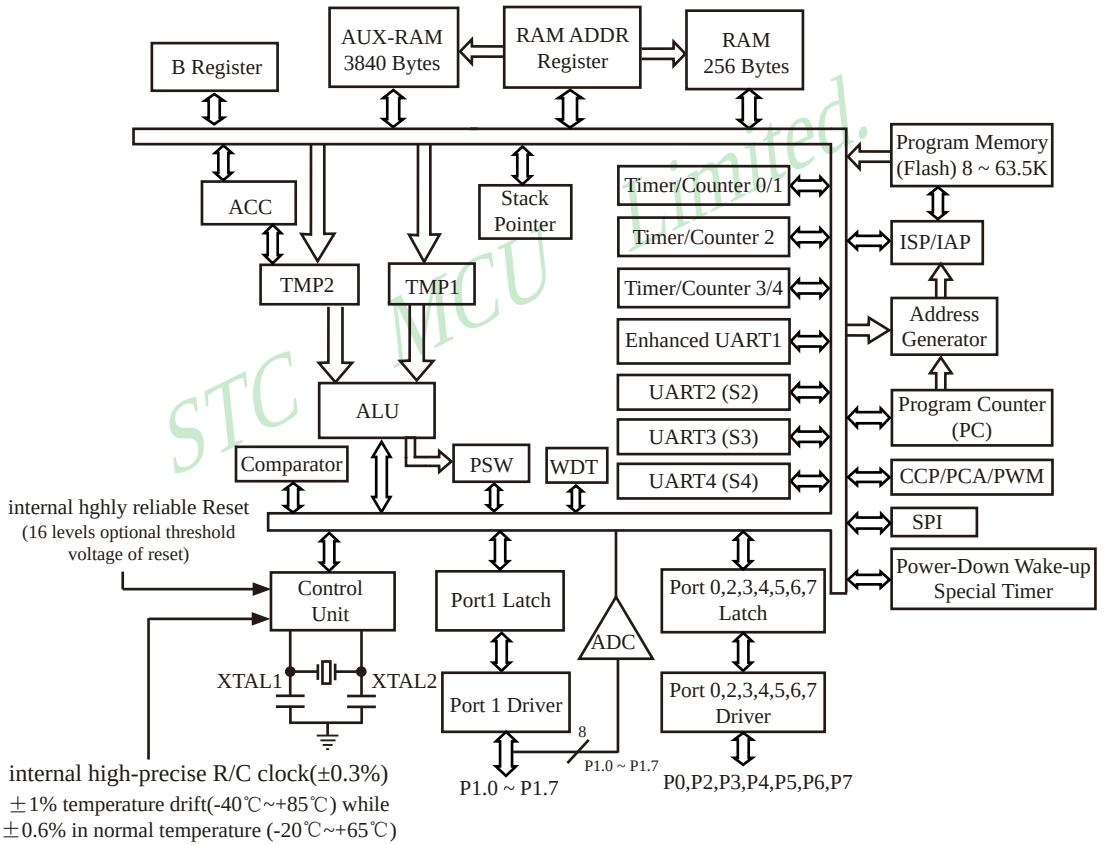

STC15W4K32S4 series Block Diagram

1.8.3 Pin Configurations of STC15W4K32S4 series MCU

All packages meet EU RoHS standards

CCP is abbreviation for Capture, Compare, PWM

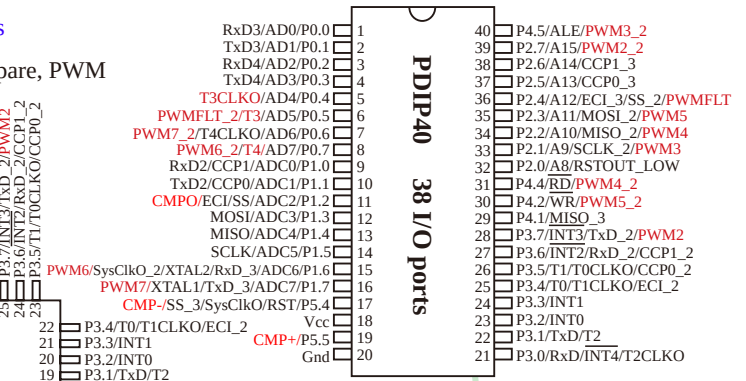

LQFP44(12x12mm)

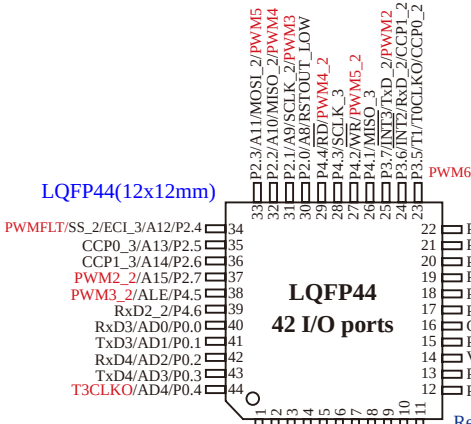

Note：P0 ports can be multiplexed as Address/Data bus，not as A/D Converter. 8 channels of A/D Converter are on P1.

Consequently：P0.x/ADx means that P0.x can be used as Address/ Data bus, while P1.x/ADCx means P1.x can be used as A/D conversion channel in the pin map.

Recommend UART1 on [P3.6/RxD_2, P3.7/TxD_2] or [P1.6/RxD_3/XTAL2, P1.7/TxD_3/XTAL1]

SysClkO is the output of master clock whose frequency can be divided into SysClk/**1,** SysClk/2, SysClk/4

The master clock can either be internal R/C clock or the external input clock or the external crystal oscillator. SysClk is the frequency of master clock.

T0CLKO refers to the programmable clock output of Timer/Counter 0 (output by dividing the frequency of the internal system clock or the input clock of external pin T0/P3.4);

T1CLKO refers to the programmable clock output of Timer/Counter 1 (output by dividing the frequency of the internal system clock or the input clock of external pin T1/P3.5);

T2CLKO refers to the programmable clock output of Timer/Counter 2 (output by dividing the frequency of the internal system clock or the input clock of external pin T2/P3.1);

T3CLKO refers to the programmable clock output of Timer/Counter 3 (output by dividing the frequency of the internal system clock or the input clock of external pin T3/P0.5);

T4CLKO refers to the programmable clock output of Timer/Counter 4 (output by dividing the frequency of the internal system clock or the input clock of external pin T4/P0.7).

In addition to programmable output on the internal system clock, T0CLKO/T1CLKO/T2CLKO/T3CLKO/ T4CLKO also can be used as divider by dividing the frequency of the internal system clock or the input clock of external pin T0/T1/T2/T3/T4.

LQFP48(9x9mm)

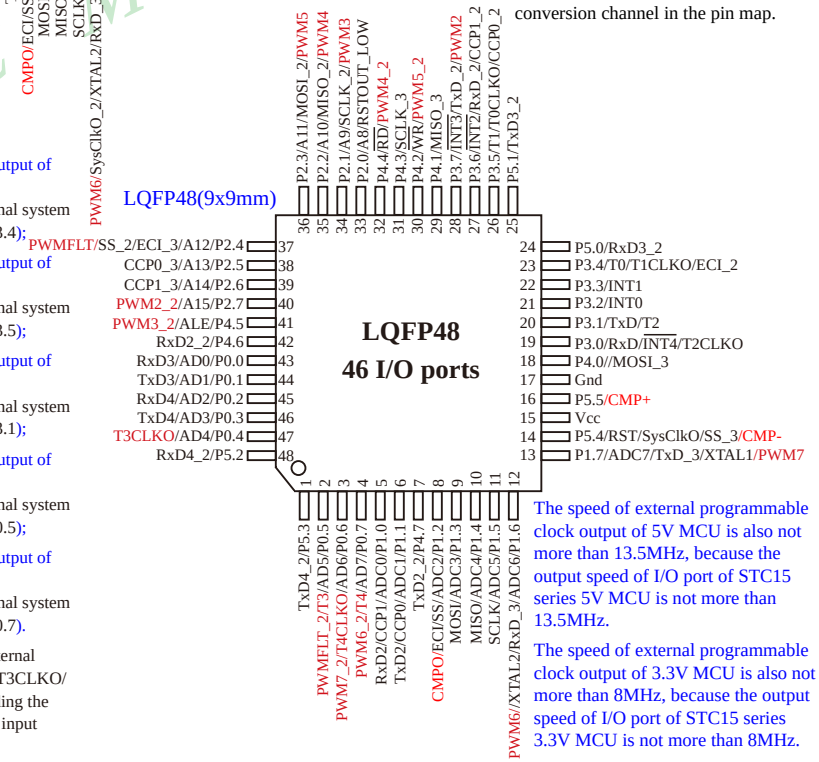

The speed of external programmable clock output of 5V MCU is also not more than 13.5MHz, because the output speed of I/O port of STC15 series 5V MCU is not more than 13.5MHz.

The speed of external programmable clock output of 3.3V MCU is also not more than 8MHz, because the output speed of I/O port of STC15 series 3.3V MCU is not more than 8MHz.

STC MCU Limited.

T0CLKO refers to the programmable clock output of Timer/Counter 0 (output by dividing the frequency of the internal system clock or the input clock of external pin T0/P3.4);

T1CLKO refers to the programmable clock output of Timer/Counter 1 (output by dividing the frequency of the internal system clock or the input clock of external pin T1/P3.5);

T2CLKO refers to the programmable clock output of Timer/Counter 2 (output by dividing the frequency of the internal system clock or the input clock of external pin T2/P3.1);

T3CLKO refers to the programmable clock output of Timer/Counter 3 (output by dividing the frequency of the internal system clock or the input clock of external pin T3/P0.5);

T4CLKO refers to the programmable clock output of Timer/Counter 4 (output by dividing the frequency of the internal system clock or the input clock of external pin T4/P0.7).

In addition to programmable output on the internal system clock, T0CLKO/ T1CLKO/T2CLKO/T3CLKO/T4CLKO also can be used as divider by dividing the frequency of the internal system clock or the input clock of external pin T0/T1/T2/T3/T4.

8 channels of A/D Converter are on P1.

P1.x/ADCx means P1.x can be used as A/D conversion channel in the pin map.

All packages meet EU RoHS standards

CCP is abbreviation for Capture, Compare, PWM

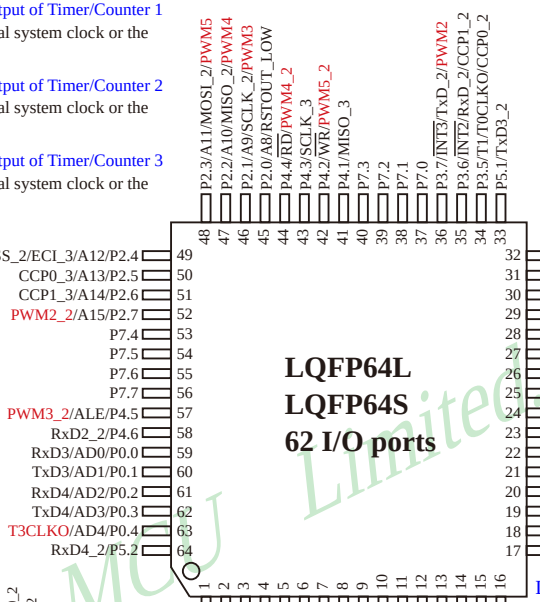

LQFP64L(16x16mm)

LQFP64S(12x12mm)

The speed of external programmable clock output of 5V MCU is also not more than 13.5MHz, because the output speed of I/O port of STC15 series 5V MCU is not more than 13.5MHz.

The speed of external programmable clock output of 3.3V MCU is also not more than 8MHz, because the output speed of I/O port of STC15 series 3.3V MCU is not more than 8MHz.

LQFP32(9x9mm)

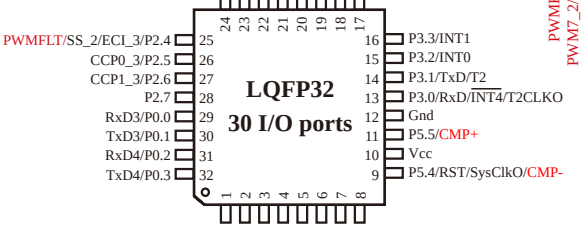

MCLKO is the output of master clock whose frequency can be divided into MCLK/**1, MCLK/2,** MCLK/4

The master clock can either be internal R/C clock or the external input clock or the external crystal oscillator. MCLK is the frequency of master clock.

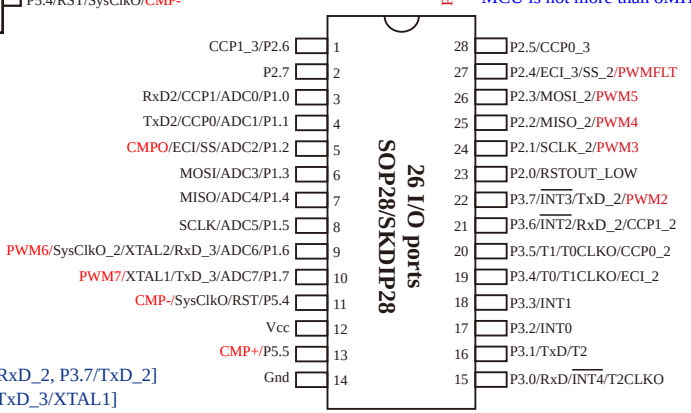

Recommend UART1 on [P3.6/RxD_2, P3.7/TxD_2] or [P1.6/RxD_3/XTAL2, P1.7/TxD_3/XTAL1]

Mnemonic	Add	Name	7	6	5	4	3	2	1	0	Reset Value
AUXR1 P_SW1	A2H	Auxiliary register 1	S1_S1	S1_S0	CCP_S1	CCP_S0	SPI_S1	SPI_S0	0	DPS	0000 0000
P_SW2	BAH	Peripheral function switch			PWM67_S	PWM2345_S		S4_S	S3_S	S2_S	xxxx x000
CLK_DIV (PCON2)	97H	Clock Division register	SysCKO_S1	SysCKO_S0	ADRJ	Tx_Rx	SysClkO_2	CLKS2	CLKS1	CLKS0	0000 0000

UART1/S1 can be switched in 3 groups of pins by selecting the control bits S1_S0 and S1_S1.		
S1_S1	S1_S0	UART1/S1 can be switched between P1 and P3
0	0	UART1/S1 on [P3.0/RxD,P3.1/TxD]
0	1	UART1/S1 on [P3.6/RxD_2,P3.7/TxD_2]
1	0	UART1/S1 on [P1.6/RxD_3/XTAL2,P1.7/TxD_3/XTAL1] when UART1 is on P1, please using internal R/C clock.
1	1	Invalid

Recommed UART1 on [P3.6/RxD_2,P3.7/TxD_2] or [P1.6/RxD_3/XTAL2,P1.7/TxD_3/XTAL1].

UART2/S2 can be switched in 2 groups of pins by selecting the control bit S2_S.	
S2_S	UART2/S2 can be switched between P1 and P4
0	UART2/S2 on [P1.0/RxD2,P1.1/TxD2]
1	UART2/S2 on [P4.6/RxD2_2,P4.7/TxD2_2]

UART3/S3 can be switched in 2 groups of pins by selecting the control bit S3_S.	
S3_S	UART3/S3 can be switched between P0 and P5
0	UART3/S3 on [P0.0/RxD3,P0.1/TxD3]
1	UART3/S3 on [P5.0/RxD3_2,P5.1/TxD3_2]

UART4/S4 can be switched in 2 groups of pins by selecting the control bit S4_S.	
S4_S	UART4/S4 can be switched between P0 and P5
0	UART4/S4 on [P0.2/RxD4,P0.3/TxD4]
1	UART4/S4 on [P5.2/RxD4_2,P5.3/TxD4_2]

SPI can be switched in 3 groups of pins by selecting the control bits SPI_S1 and SPI_S0		
SPI_S1	SPI_S0	SPI can be switched in P1 and P2 and P4
0	0	SPI on [P1.2/SS,P1.3/MOSI,P1.4/MISO,P1.5/SCLK]
0	1	SPI on [P2.4/SS_2,P2.3/MOSI_2,P2.2/MISO_2,P2.1/SCLK_2]
1	0	SPI on [P5.4/SS_3,P4.0/MOSI_3,P4.1/MISO_3,P4.3/SCLK_3]
1	1	Invalid

STC MCU Limited.

Mnemonic	Add	Name	7	6	5	4	3	2	1	0	Reset Value
AUXR1 P_SW1	A2H	Auxiliary register 1	S1_S1	S1_S0	CCP_S1	CCP_S0	SPI_S1	SPI_S0	0	DPS	0000 0000
P_SW2	BAH	Peripheral function switch			PWM67_S	PWM2345_S		S4_S	S3_S	S2_S	xxxx x000
CLK_DIV (PCON2)	97H	Clock Division register	SysCKO_S1	SysCKO_S0	ADRJ	Tx_Rx	SysClkO_2	CLKS2	CLKS1	CLKS0	0000 0000

CCP can be switched in 3 groups of pins by selecting the control bits CCP_S1 and CCP_S0.		
CCP_S1	CCP_S0	CCP can be switched in P1 and P2 and P3
0	0	CCP on [P1.2/ECI,P1.1/CCP0,P1.0/CCP1,P3.7/CCP2]
0	1	CCP on [P3.4/ECI_2,P3.5/CCP0_2,P3.6/CCP1_2,P3.7/CCP2_2]
1	0	CCP on [P2.4/ECI_3,P2.5/CCP0_3,P2.6/CCP1_3,P2.7/CCP2_3]
1	1	Invalid

PWM2/PWM3/PWM4/PWM5/PWMFLT can be switched in 2 groups of pins by selecting the control bit PWM2345_S.	
PWM2345_S	PWM2/PWM3/PWM4/PWM5/PWMFLT can be switched between P2, P3, and P4
0	PWM2/PWM3/PWM4/PWM5/PWMFLT on [P3.7/PWM2, P2.1/PWM3, P2.2/PWM4, P2.3/PWM5, P2.4/PWMFLT]
1	PWM2/PWM3/PWM4/PWM5/PWMFLT on [P2.7/PWM2_2, P4.5/PWM3_2, P4.4/ PWM4_2, P4.2/PWM5_2, P0.5/PWMFLT_2]

PWM6/PWM7 can be switched in 2 groups of pins by selecting the control bit PWM67_S.	
PWM67_S	PWM2/PWM3/PWM4/PWM5/PWMFLT can be switched between P0 and P1
0	PWM6/PWM7 on [P1.6/PWM6,P1.7/PWM7]
1	PWM6/PWM7 on [P0.7/PWM6_2,P0.6/PWM7_2]

DPS： DPTR registers select bit.

0 ： DPTR0 is selected

1 ： DPTR1 is selected

ADRJ：the adjustment bit of ADC result

0：ADC_RES[7:0] store high 8-bit ADC result，ADC_RESL[1:0] store low 2-bit ADC result

1：ADC_RES[1:0] store high 2-bit ADC result，ADC_RESL[7:0] store low 8-bit ADC result

Tx_Rx：the set bit of relay and broadcast mode of UART1

0：UART1 works on normal mode

1：UART1 works on relay and broadcast mode，that to say output the input level state of RxD port to the outside TxD pin in real time, namely the external output of TxD pin can reflect the input level state of RxD port.

the RxD and TxD of UART1 can be switched in 3 groups of pins: [RxD/P3.0, TxD/P3.1];
[RxD_2/P3.6, TxD_2/P3.7];
[RxD_3/P1.6, TxD_3/P1.7].

STC MCU Limited.

Mnemonic	Add	Name	7	6	5	4	3	2	1	0	Reset Value
CLK_DIV (PCON2)	97H	Clock Division register	SysCKO_S1	SysCKO_S0	ADRJ	Tx_Rx	SysClkO_2	CLKS2	CLKS1	CLKS0	0000 0000

SysCKO_S1	SysCKO_S0	the control bit of master clock output by dividing the frequency (The master clock can either be internal R/C clock or the external input clock or the external crystal oscillator)
0	0	Master clock do not output external clock
0	1	Master clock output external clock，but its frequency do not be divided，and the output clock frequency = SysClk / 1
1	0	Master clock output external clock，but its frequency is divided by 2，and the output clock frequency = SysClk / 2
1	1	Master clock output external clock，but its frequency is divided by 4，and the output clock frequency = SysClk / 4

The master clock can either be internal R/C clock or the external input clock or the external crystal oscillator.
SysClk is the frequency of master clock.
STC15W4K32S4 series MCU output master clock on SysClkO/P5.4
It is on SysClkO/P3.4 that the Programmable clock output of master clock of STC15 series 8-pin MCU (such as STC15F101W series). However, it is on SysClkO/P5.4 that the Programmable clock output of master clock of other STC15 series MCU including 16-pin or more than 16-pin MCU.

SysClkO_2：to select Master Clock output on where
0：Master Clock output on SysClkO/P5.4
1：Master Clock output on SysClkO_2/XTAL2/P1.6
The master clock can either be internal R/C clock or the external input clock or the external crystal oscillator.

CLKS2	CLKS1	CLKS0	the control bit of system clock (System clock refers to the master clock that has been divided frequency, which is offered to CPU, UARTs, SPI, Timers, CCP/PWM/PCA and A/D Converter)
0	0	0	Master clock frequency/1, No division
0	0	1	Master clock frequency/2
0	1	0	Master clock frequency/4
0	1	1	Master clock frequency/8
1	0	0	Master clock frequency/16
1	0	1	Master clock frequency/32
1	1	0	Master clock frequency/64
1	1	1	Master clock frequency/128

The master clock can either be internal R/C clock or the external input clock or the external crystal oscillator.

STC MCU Limited.

1.8.4 STC15W4K32S4 series Selection and Price Table

Type 1T 8051 MCU	Operating Voltage (V)	Flash (byte)	SRAM (byte)	UART	SPI	common Timers T0-T4	8 channels PWM		Speical Power-down Wake-up Timer	Standard External Interrupts	A/D 8-channel	COMPARATOR	DPTR	EEPROM	Internal Low-Voltage Detection Interrupt	WDT	Internal High-reliable Reset (with optional threshold voltage)	Internal High-Precise Clock	Output clock and reset signal from MCU	Encryption Download (to protect your code from being intercepted)	RS485 Control	All Packages LQFP64S/LQFP64L/ QFN64/LQFP48/ QFN48/ LQFP44/PDIP40 LQFP32/SOP28/ SKDIP28			
							15-bit special PWM (with a	10-bit CCP														Price of a part of packages (RMB ¥)			
																						PDIP 40	LQFP 44	LQFP 48	LQFP 64S
STC15W4K32S4 series MCU Selection and Price Table Note: 8 channels PWM can be used as 8 channels DAC, 2 channels CCP can be used as 2 Timers or 2 external interrupts.																									
STC15W4K16S4	2.5-5.5	16K	4K	4	Y	5	6-ch	2-ch	Y	5	10 bits	Y	2	42K	Y	Y	16-level	Y	Y	Y	Y	¥5.7	¥5.2	¥5.2	¥5.4
STC15W4K32S4	2.5-5.5	32K	4K	4	Y	5	6-ch	2-ch	Y	5	10 bits	Y	2	26K	Y	Y	16-level	Y	Y	Y	Y	¥5.9	¥5.5	¥5.5	¥5.7
STC15W4K40S4	2.5-5.5	40K	4K	4	Y	5	6-ch	2-ch	Y	5	10 bits	Y	2	18K	Y	Y	16-level	Y	Y	Y	Y	¥5.9	¥5.6	¥5.6	¥5.8
STC15W4K48S4	2.5-5.5	48K	4K	4	Y	5	6-ch	2-ch	Y	5	10 bits	Y	2	10K	Y	Y	16-level	Y	Y	Y	Y	¥5.9	¥5.6	¥5.6	¥5.8
STC15W4K56S4	2.5-5.5	56K	4K	4	Y	5	6-ch	2-ch	Y	5	10 bits	Y	2	2K	Y	Y	16-level	Y	Y	Y	Y	¥5.9	¥5.6	¥5.6	¥5.8
STC15W4K58S4 (which itself is a emluator)	2.5-5.5	58K	4K	4	Y	5	6-ch	2-ch	Y	5	10 bits	Y	2	IAP	Y	Y	16-level	Y	Y	Y	Y	¥5.9	¥5.6	¥5.6	¥5.8
																						The program Flash in user program area can be used as EEPROM.			
IAP15W4K61S4 (which itself is a emluator)	2.5-5.5	61K	4K	4	Y	5	6-ch	2-ch	Y	5	10 bits	Y	2	IAP	Y	Y	16-level	Y	Y	Y	Y	¥5.9	¥5.6	¥5.6	¥5.8
																						The program Flash in user program area can be used as EEPROM.			
IRC15W4K63S4 (Using external crystal or internal 24MHz clock)	2.5-5.5	63.5K	4K	4	Y	5	6-ch	2-ch	Y	5	10 bits	Y	2	IAP	Y	Y	Fixed	Y	Y	N	N	¥5.9	¥5.6	¥5.6	¥5.8
																						The program Flash in user program area can be used as EEPROM.			

Encryption Download : please burn source code with encryption key onto MCU in the factory. Then, you can make a simple update software just with one "update" button by fisrtly using the fuction "encrytion download" and then "release project" to update yourself code unabled to be intercepted when you need to upgrade your code.

If user wants to use 40-pin and above MCU, LQFP-44 is suggested, while PDIP-40 is still supplied normal ; if user wants to use the 32-pin MCU, LQFP-32 is recommeded; if user wants to use the 28-pin MCU, SOP-28 is recommended.

To provide customized IC services

Because the last 7 bytes of the program area is stored mandatorily the contents of only global ID, the program space the user can actually use is 7 bytes smaller than the space shown in the selection table.

Conclusion : STC15W4K32S4 series MCU have: Five 16-bit relaodable Timers/Counters that are Timer/Counter 0, Timer/Counter 1, Timer/Counter 2, Timer/Counter 3 and Timer/Counter 4; 8 channels and 10 bits PWM (can achieve 8 D/A converters or 2 timers or 2 external interrupts again); special power-down wake-up timer; 5 external interrupts INT0/INT1/$\overline{\text{INT2}}$/$\overline{\text{INT3}}$/$\overline{\text{INT4}}$; 4 high-speed asynchronous serial ports ---- UARTs (UART1/UART2/UART3/UART4 can be used simultaneously); a high-speed synchronous serial peripheral interface ---- SPI; 8 channels and 10 bits high-speed A/D converter; a group of Comparator, 2 data pointers ---- DPTR; external data bus and so on.

STC MCU Limited.

1.8.5 Naming rules of STC15W4K32S4 series MCU

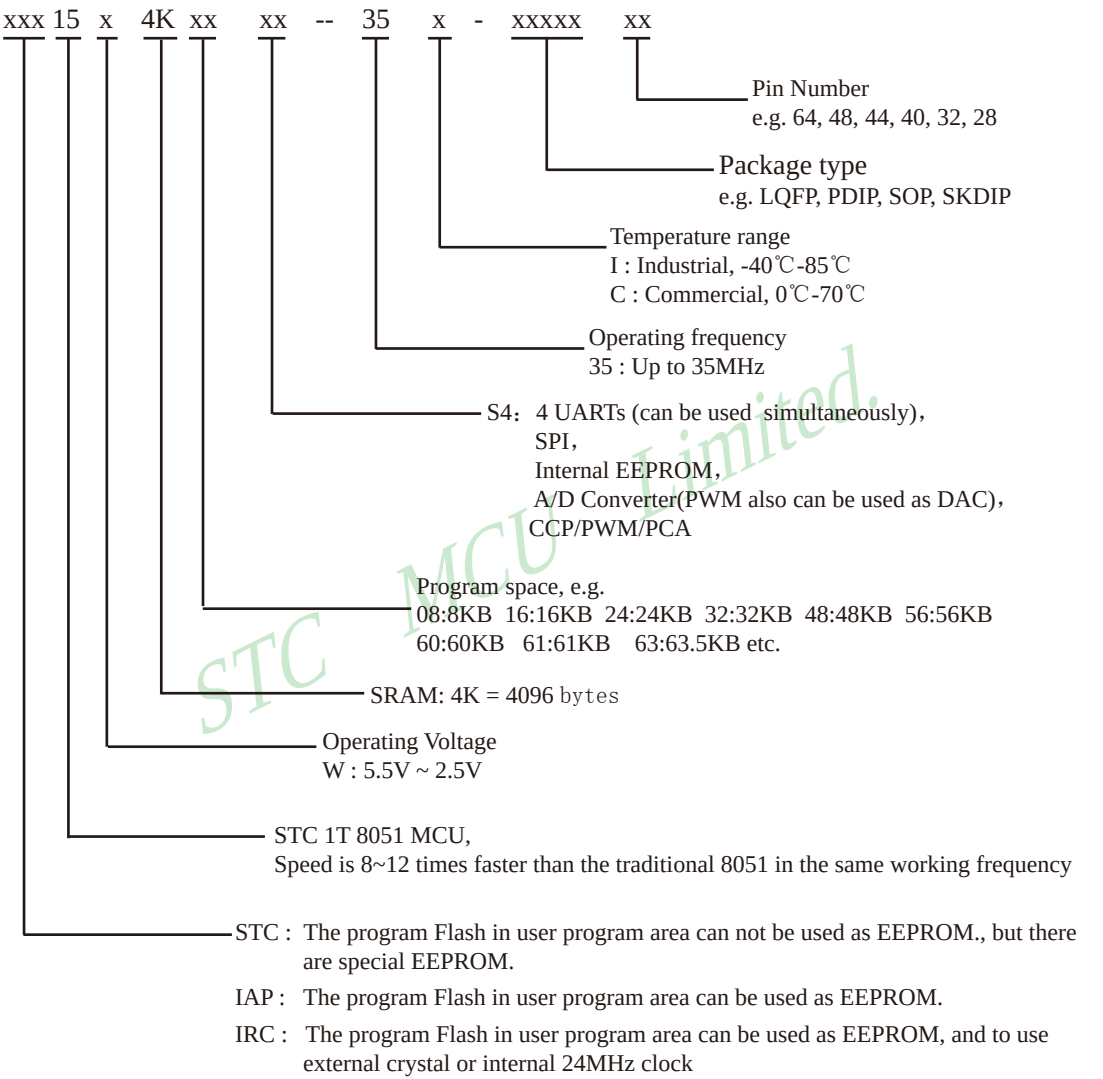

STC MCU Limited.

1.8.6 Application Circuit Diagram for ISP of STC15W4K32S4 series MCU

1.8.6.1 Application Circuit Diagram for ISP using RS-232 Converter

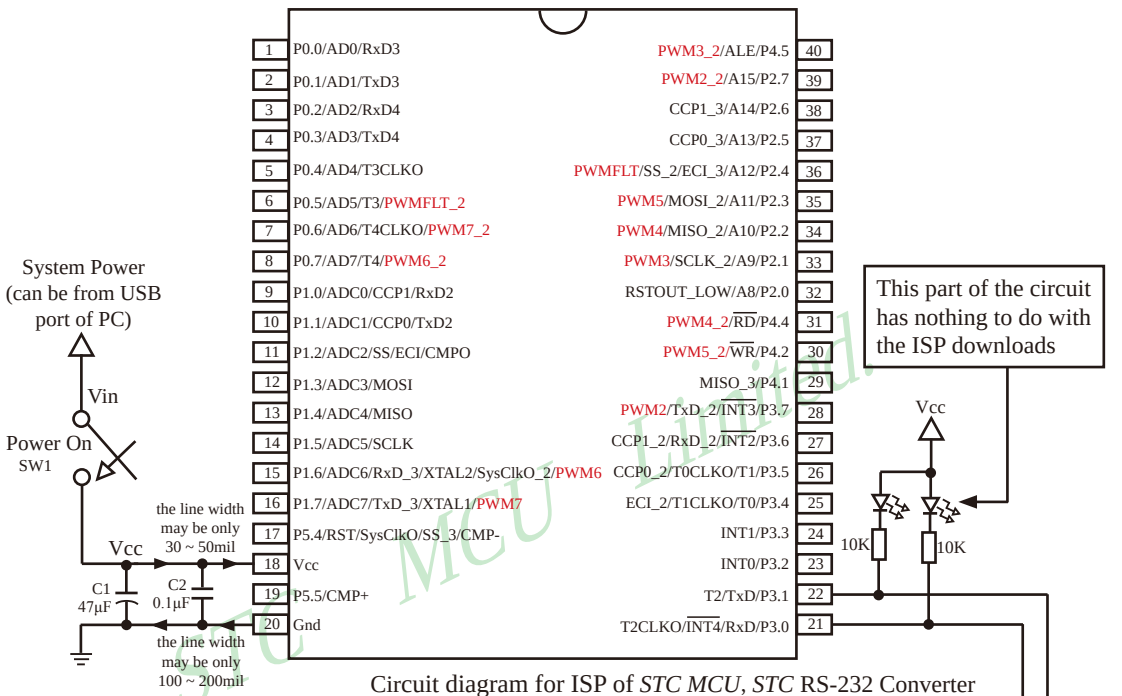

Circuit diagram for ISP of *STC MCU*, *STC* RS-232 Converter

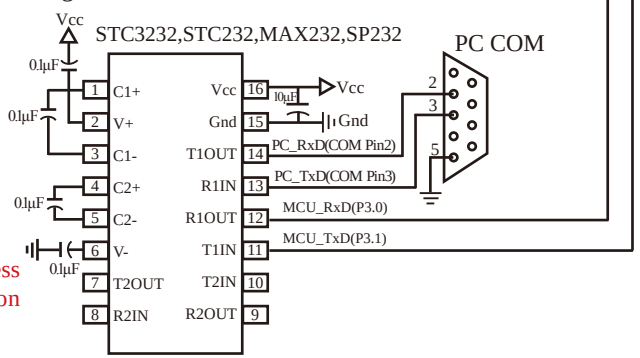

Note：P0 ports can be multiplexed as Address/ Data bus，not as A/D Converter. 8 channels of A/D Converter are on P1.

Consequently：P0.x/ADx means that P0.x can be used as Address/Data bus, while P1.x/ADCx means P1.x can be used as A/D conversion channel in the pin map.

Please power on the target MCU after press down the button "Download/Program" on STC-ISP.exe when burning code to MCU.

Internal hghly reliable Reset, External reset circuit can be completely removed.

P5.4/RST/SysClkO pin factory defaults to the I/O port, which can be set as RST reset pin(active high) through the STC-ISP programmer.

Internal high-precise R/C clock(±3%), ±1% temperature drift (-40℃~+85℃) while ±0.6% in normal temperature (-20℃~+65℃). External expensive crysal can be completely removed.

Recommend to add decoupling capacitor C1(47μF) and C2(0.1μF) between Vcc and Gnd that can remove power noise and improve the anti-interference ability.

1.8.6.2 Application Circuit Diagram for ISP using USB Chip PL-2303SA to convert Serial Port

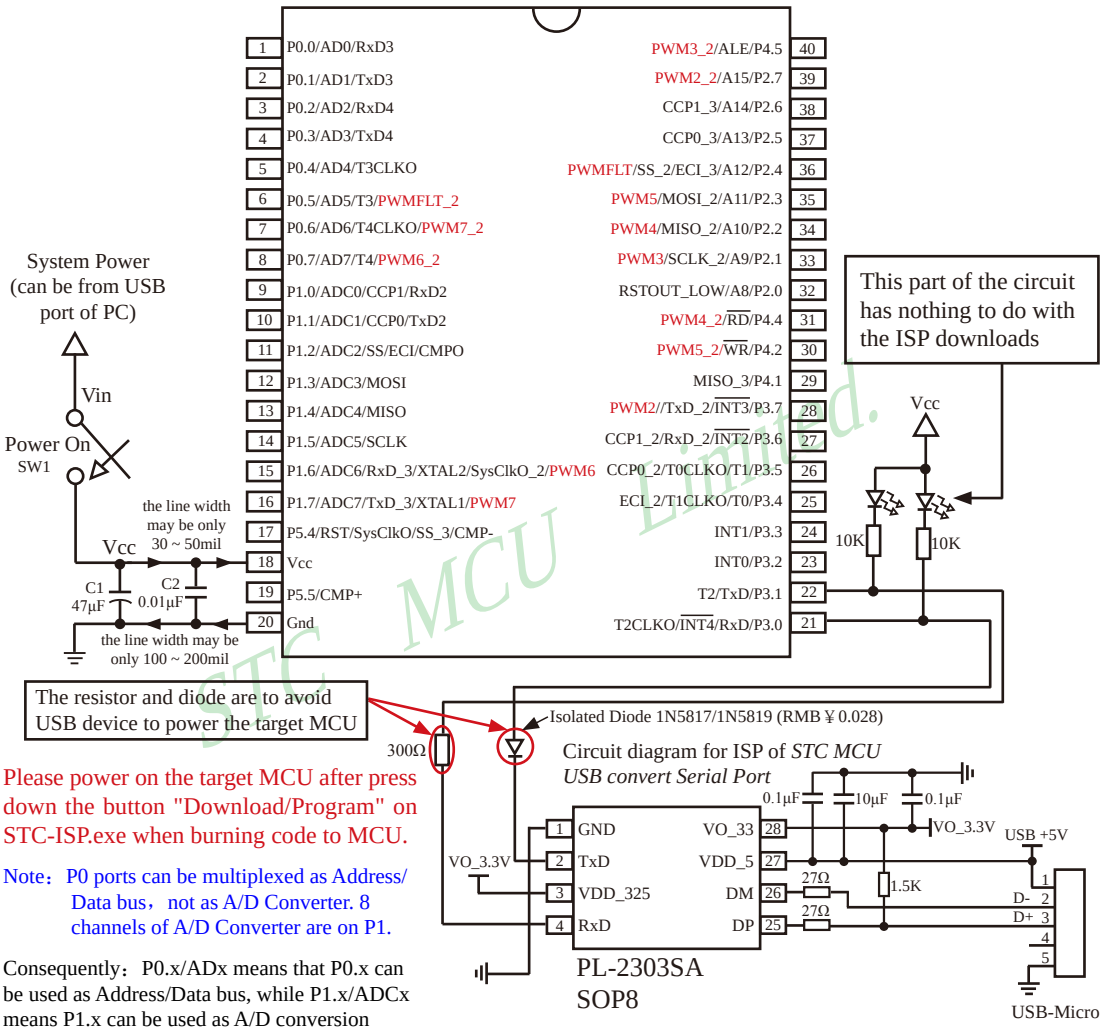

Please power on the target MCU after press down the button "Download/Program" on STC-ISP.exe when burning code to MCU.

Note：P0 ports can be multiplexed as Address/ Data bus，not as A/D Converter. 8 channels of A/D Converter are on P1.

Consequently：P0.x/ADx means that P0.x can be used as Address/Data bus, while P1.x/ADCx means P1.x can be used as A/D conversion channel in the pin map.

Internal hghly reliable Reset, External reset circuit can be completely removed.

P5.4/RST/SysClkO pin factory defaults to the I/O port, which can be set as RST reset pin(active high) through the STC-ISP programmer.

Internal high-precise R/C clock(±3%), ±1% temperature drift (-40℃~+85℃) while ±0.6% in normal temperature (-20℃~+65℃). External expensive crysal can be completely removed.

Recommend to add decoupling capacitor C1(47μF) and C2(0.1μF) between Vcc and Gnd that can remove power noise and improve the anti-interference ability.

1.8.6.3 Application Circuit Diagram for ISP using USB Chip PL-2303HXD / PL-2303HX to convert Serial Port

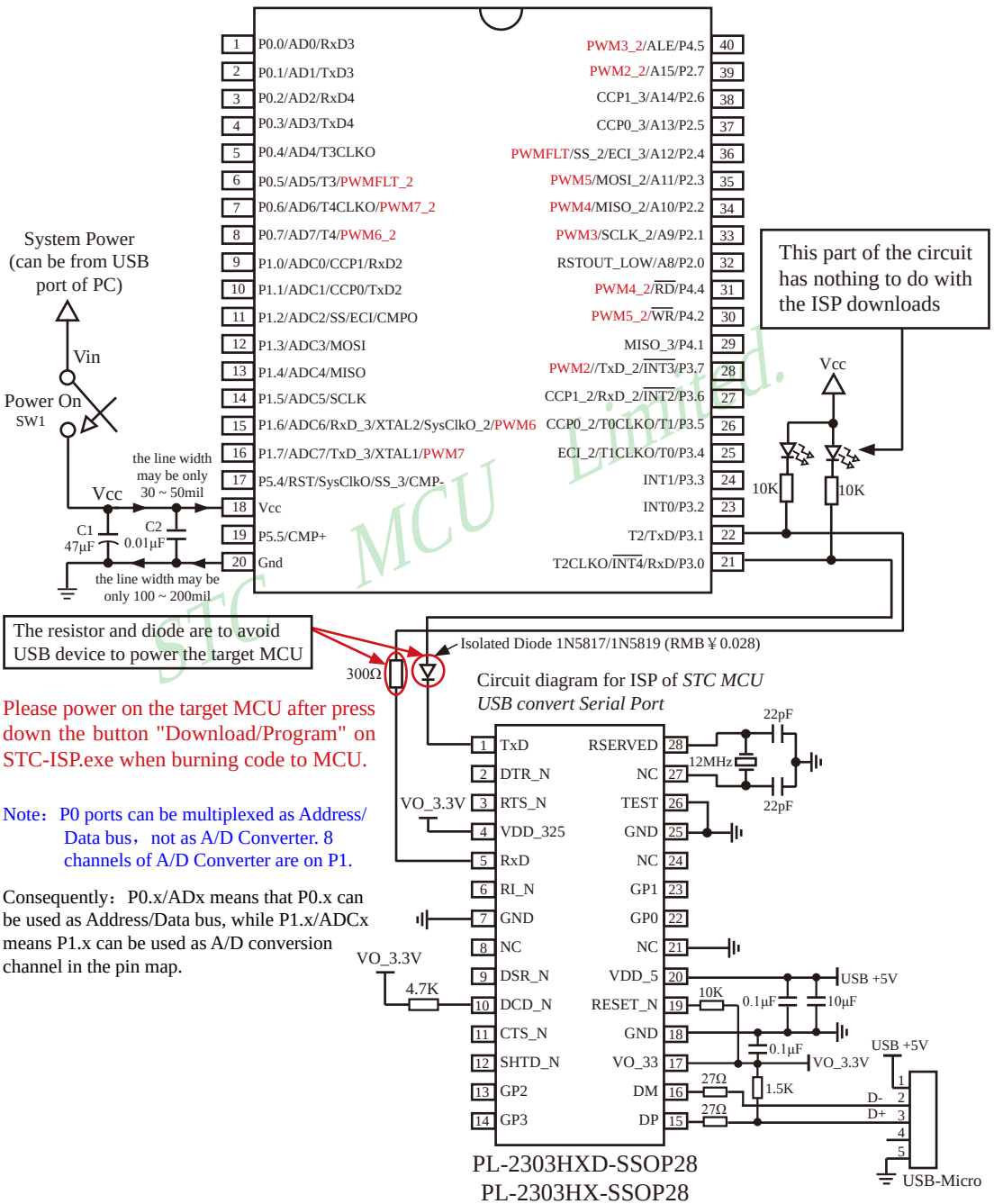

Please power on the target MCU after press down the button "Download/Program" on STC-ISP.exe when burning code to MCU.

Note：P0 ports can be multiplexed as Address/ Data bus，not as A/D Converter. 8 channels of A/D Converter are on P1.

Consequently：P0.x/ADx means that P0.x can be used as Address/Data bus, while P1.x/ADCx means P1.x can be used as A/D conversion channel in the pin map.

STC MCU Limited.

1.8.7 Pin Descriptions of STC15W4K32S4 series MCU

MNEMONIC	Pin Number							DESCRIPTION	
	LQFP64	LQFP48	LQFP44	PDIP40	SOP32	LQFP32	SOP28 SKDIP28		
P0.0/AD0/ RxD3	59	43	40	1	1	29	-	P0.0	common I/O port PORT0[0]
								AD0	Address/Data Bus
								RxD3	Receive Data Port of UART3
P0.1/AD1/ TxD3	60	44	41	2	2	30	-	P0.1	common I/O port PORT0[1]
								AD1	Address/Data Bus
								TxD3	Transit Data Port of UART3
P0.2/AD2/ RxD4	61	45	42	3	3	31	-	P0.2	common I/O port PORT0[2]
								AD2	Address/Data Bus
								RxD4	Receive Data Port of UART4
P0.3/AD3/ TxD4	62	46	43	4	4	32	-	P0.3	common I/O port PORT0[3]
								AD3	Address/Data Bus
								TxD4	Transit Data Port of UART4
P0.4/AD4/ T3CLKO	63	47	44	5	-	-	-	P0.4	common I/O port PORT0[4]
								AD4	Address/Data Bus
								T3CLKO	T3 Clock Output The pin can be configured for T3CLKO by setting T4T3M[0] bit /T3CLKO
P0.5/AD5/T3/ PWMFLT_2	2	2	1	6	-	-	-	P0.5	common I/O port PORT0[5]
								AD5	Address/Data Bus
								T3	External input of Timer/Counter 3
								PWMFLT_2	Control PWM to emergency stop
P0.6/AD6/ T4CLKO/ PWM7_2	3	3	2	7	-	-	-	P0.6	common I/O port PORT0[6]
								AD6	Address/Data Bus
								T4CLKO	T4 Clock Output The pin can be configured for T4CLKO by setting T4T3M[4] bit /T4CLKO
								PWM7_2	The seventh output channel of Pulse Width Modulation
P0.7/AD7/T4/ PWM6_2	4	4	3	8	-	-	-	P0.7	common I/O port PORT0[7]
								AD7	Address/Data Bus
								T4	External input of Timer/Counter 4
								PWM6_2	The sixth output channel of Pulse Width Modulation
P1.0/ADC0/ CCP1/RxD2	9	5	4	9	5	1	3	P1.0	common I/O port PORT1[0]
								ADC0	ADC input channel-0
								CCP1	Capture of external signal(measure frequency or be used as external interrupts)、high-speed Pulse and Pulse-Width Modulation output channel-1
								RxD2	Receive Data Port of UART2

STC MCU Limited

MNEMONIC	Pin Number							DESCRIPTION	
	LQFP64	LQFP48	LQFP44	PDIP40	SOP32	LQFP32	SOP28 SKDIP28		
P1.1/ADC1/ CCP0/TxD2	10	6	5	10	6	2	4	P1.1	common I/O port PORT1[1]
								ADC1	ADC input channel-1
								CCP0	Capture of external signal(measure frequency or be used as external interrupts)、high-speed Pulse and Pulse-Width Modulation output channel-0
								TxD2	Transit Data Port of UART2
P1.2/ADC2/ SS/ECI/ CMPO	12	8	7	11	7	3	5	P1.2	common I/O port PORT1[2]
								ADC2	ADC input channel-2
								SS	Slave selection signal of synchronous serial peripheral interface----SPI
								ECI	External pulse input pin of CCP/ PCA counter
								CMPO	The output port of reslut compared by comparator
P1.3/ADC3/ MOSI	13	9	8	12	8	4	6	P1.3	common I/O port PORT1[3]
								ADC3	ADC input channel-3
								MOSI	Master Output Slave Input of SPI
P1.4/ADC4/ MISO	14	10	9	13	9	5	7	P1.4	common I/O port PORT1[4]
								ADC4	ADC input channel-4
								MISO	Master Iutput Slave Onput of SPI
P1.5/ADC5/ SCLK	15	11	10	14	10	6	8	P1.5	common I/O port PORT1[5]
								ADC5	ADC input channel-5
								SCLK	Clock Signal of synchronous serial peripheral interface----SPI
P1.6/ADC6/ RxD_3/ XTAL2/ SysClkO_2/ PWM6	16	12	11	15	11	7	9	P1.6	common I/O port PORT1[6]
								ADC6	ADC input channel--6
								RxD_3	Receive Data Port of UART1
								SysClkO_2	Master clock output; the output frequency can be SysClk/1, SysClk/2 and SysClk/4. The master clock can either be internal R/C clock or the external input clock or the external crystal oscillator.
								XTAL2	Output from the inverting amplifier of internal clock circuit. This pin should be floated when an external oscillator is used.
								PWM6	The sixth output channel of Pulse Width Modulation

STC MCU Limited

MNEMONIC	Pin Number							DESCRIPTION	
	LQFP64	LQFP48	LQFP44	PDIP40	SOP32	LQFP32	SOP28 SKDIP28		
P1.7/ADC7/ TxD_3/ XTAL1/ PWM7	17	13	12	16	12	8	10	P1.7	common I/O port PORT1[7]
								ADC7	ADC input channel--7
								TxD_3	Transit Data Port of UART1
								XTAL1	Input to the inverting oscillator amplifier of internal clock circuit. Receives the external oscillator signal when an external oscillator is used.
								PWM7	The seventh output channel of Pulse Width Modulation
P2.0/A8/ RSTOUT_LOW	45	33	30	32	25	21	23	P2.0	common I/O port PORT2[0]
								A8	The eighth bit of Address bus — A8
								RSTOUT_LOW	the pin output low after power-on and during reset, which can be set to output high by software
P2.1/A9/ SCLK_2/ PWM3	46	34	31	33	26	22	24	P2.1	common I/O port PORT2[1]
								A9	The ninth bit of Address bus — A9
								SCLK_2	Clock Signal of synchronous serial peripheral interface----SPI
								PWM3	The third output channel of Pulse Width Modulation
P2.2/A10/ MISO_2/ PWM4	47	35	32	34	27	23	25	P2.2	common I/O port PORT2[2]
								A10	The tenth bit of Address bus — A10
								MISO_2	Master Iutput Slave Onput of SPI
								PWM4	The fourth output channel of Pulse Width Modulation
P2.3/A11/ MOSI_2/ PWM5	48	36	33	35	28	24	26	P2.3	common I/O port PORT2[3]
								A11	The eleventh bit of Address bus —A11
								MOSI_2	Master Output Slave Input of SPI
								PWM5	The fifth output channel of Pulse Width Modulation
P2.4/A12/ ECI_3/SS_2/ PWMFLT	49	37	34	36	29	25	27	P2.4	common I/O port PORT2[4]
								A12	The twelfth bit of Address bus — A12
								ECI_3	External pulse input pin of CCP/PCA counter
								SS_2	Slave selection signal of synchronous serial peripheral interface----SPI
								PWMFLT	Control PWM to emergency stop
P2.5/A13/ CCP0_3	50	38	35	37	30	26	28	P2.5	common I/O port PORT2[5]
								A13	The thirteenth bit of Address bus — A13
								CCP0_3	Capture of external signal(measure frequency or be used as external interrupts)、high-speed Pulse and Pulse-Width Modulation output channel-0

STC MCU Limited

MNEMONIC	Pin Number							DESCRIPTION	
	LQFP64	LQFP48	LQFP44	PDIP40	SOP32	LQFP32	SOP28 SKDIP28		
P2.6/A14/ CCP1_3	51	39	36	38	31	27	1	P2.6	common I/O port PORT2[6]
								A14	The fourteenth bit of Address bus—A14
								CCP1_3	Capture of external signal(measure frequency or be used as external interrupts)、high-speed Pulse and Pulse-Width Modulation output channel-1
P2.7/A15/ PWM2_2	52	40	37	39	32	28	2	P2.7	common I/O port PORT2[7]
								A15	The fifteenth bit of Address bus — A15
								PWM2_2	The second output channel of Pulse Width Modulation
P3.0/RxD/ $\overline{\text{INT4}}$ /T2CLKO	27	19	18	21	17	13	15	P3.0	common I/O port PORT3[0]
								RxD	Receive Data Port of UART1
								$\overline{\text{INT4}}$	External interrupt 4, which only can be generated on falling edge. /INT4 supports power-down waking-up
								T2CLKO	T2 Clock Output The pin can be configured for T2CLKO by setting INT_CLKO[2] bit /T2CLKO
P3.1/TxD/T2	28	20	19	22	18	14	16	P3.1	common I/O port PORT3[1]
								TxD	Transit Data Port of UART1
								T2	External input of Timer/Counter 2
P3.2/INT0	29	21	20	23	19	15	17	P3.2	common I/O port PORT3[2]
								INT0	External interrupt 0, which both can be generated on rising and falling edge. INT0 only can generate interrupt on falling edge if IT0 (TCON.0) is set to 1. And, INT0 both can generate interrupt on rising and falling edge if IT0 (TCON.0) is set to 0.
P3.3/INT1	30	22	21	24	20	16	18	P3.3	common I/O port PORT3[3]
								INT1	External interrupt 1, which both can be generated on rising and falling edge. INT1 only can generate interrupt on falling edge if IT1 (TCON.2) is set to 1. And, INT1 both can generate interrupt on rising and falling edge if IT1 (TCON.2) is set to 0. INT1 supports power-down waking-up
P3.4/T0/ T1CLKO/ ECI_2	31	23	22	25	21	17	19	P3.4	common I/O port PORT3[4]
								T0	External input of Timer/Counter 0
								T1CLKO	T1 Clock Output The pin can be configured for T1CLKO by setting INT_CLKO[1] bit /T1CLKO
								ECI_2	External pulse input pin of CCP/PCA counter

STC MCU Limited

MNEMONIC	Pin Number							DESCRIPTION	
	LQFP64	LQFP48	LQFP44	PDIP40	SOP32	LQFP32	SOP28 SKDIP28		
P3.5/T1/ T0CLKO/ CCP0_2	34	26	23	26	22	18	20	P3.5	common I/O port PORT3[5]
								T1	External input of Timer/Counter 1
								T0CLKO	T0 Clock Output The pin can be configured for T0CLKO by setting INT_CLKO[0] bit /T0CLKO
								CCP0_2	Capture of external signal(measure frequency or be used as external interrupts)、high-speed Pulse and Pulse-Width Modulation output channel-0
P3.6/$\overline{\text{INT2}}$/ RxD_2/ CCP1_2	35	27	24	27	23	19	21	P3.6	common I/O port PORT3[6]
								$\overline{\text{INT2}}$	External interrupt 2, which only can be generated on falling edge. /INT2 supports power-down waking-up
								RxD_2	Receive Data Port of UART1
								CCP1_2	Capture of external signal(measure frequency or be used as external interrupts)、high-speed Pulse and Pulse-Width Modulation output channel-1
P3.7/$\overline{\text{INT3}}$ /TxD_2/ PWM2	36	28	25	28	24	20	22	P3.7	common I/O port PORT3[7]
								$\overline{\text{INT3}}$	External interrupt 3, which only can be generated on falling edge. /INT3 supports power-down waking-up
								TxD_2	Transit Data Port of UART1
								PWM2	The second output channel of Pulse Width Modulation
P4.0/MOSI_3	22	18	17	-	-	-	-	P4.0	common I/O port PORT4[0]
								MISO_3	Master Iutput Slave Onput of SPI
P4.1/MISO_3	41	29	26	29	-	-	-	P4.1	common I/O port PORT4[1]
								MOSI_3	Master Output Slave Input of SPI
P4.2/$\overline{\text{WR}}$ /PWM5_2	42	30	27	30	-	-	-	P4.2	common I/O port PORT4[2]
								$\overline{\text{WR}}$	Write pulse of external data memory
								PWM5_2	The fifth output channel of Pulse Width Modulation
P4.3/SCLK_3	43	31	28	-	-	-	-	P4.3	PORT4[3]
								SCLK_3	Clock Signal of synchronous serial peripheral interface----SPI
P4.4/$\overline{\text{RD}}$ /PWM4_2	44	32	29	31	-	-	-	P4.4	common I/O port PORT4[4]
								$\overline{\text{RD}}$	Read pulse of external data memory
								PWM4_2	The fourth output channel of Pulse Width Modulation

STC MCU Limited.

MNEMONIC	Pin Number							DESCRIPTION	
	LQFP64	LQFP48	LQFP44	PDIP40	SOP32	LQFP32	SOP28 SKDIP28		
P4.5/ALE/ PWM3_2	57	41	38	40	-	-	-	P4.5	common I/O port PORT4[5]
								ALE	Address Latch Enable. It is used for external data memory cycles (MOVX)
								PWM3_2	The third output channel of Pulse Width Modulation
P4.6/RxD2_2	58	42	39	-	-	-	-	P4.6	common I/O port PORT4[6]
								RxD2_2	Receive Data Port of UART2
P4.7/TxD2_2	11	7	6	-	-	-	-	P4.7	common I/O port PORT4[7]
								TxD2_2	Transit Data Port of UART2
P5.0/RxD3_2	32	24	-	-	-	-	-	P5.0	common I/O port PORT5[0]
								RxD3_2	Receive Data Port of UART3
P5.1/TxD3_2	33	25	-	-	-	-	-	P5.1	common I/O port PORT5[1]
								TxD3_2	Transit Data Port of UART3
P5.2/RxD4_2	64	48	-	-	-	-	-	P5.2	common I/O port PORT5[2]
								RxD4_2	Receive Data Port of UART4
P5.3/TxD4_2	1	1	-	-	-	-	-	P5.3	common I/O port PORT5[3]
								TxD4_2	Transit Data Port of UART4
P5.4/RST/ SysClkO/ SS_3/CMP-	18	14	13	17	13	9	11	P5.4	common I/O port PORT5[4]
								RST	Reset pin. A high on this pin for at least two machine cycles will reset the device.
								SysClkO	Master clock output; the output frequency can be SysClk/1, SysClk/2 and SysClk/4. The master clock can either be internal R/C clock or the external input clock or the external crystal oscillator.
								SS_3	Slave selection signal of synchronous serial peripheral interface----SPI
								CMP-	Comparator negative input
P5.5/CMP+	20	16	15	19	15	11	13	P5.5	common I/O port PORT5[5]
								CMP+	Comparator positive input
P6.0	5							common I/O port PORT6[0]	
P6.1	6							common I/O port PORT6[1]	
P6.2	7							common I/O port PORT6[2]	
P6.3	8							common I/O port PORT6[3]	
P6.4	23							common I/O port PORT6[4]	
P6.5	24							common I/O port PORT6[5]	

STC MCU Limited.

MNEMONIC	Pin Number							DESCRIPTION
	LQFP64	LQFP48	LQFP44	PDIP40	SOP32	LQFP32	SOP28 SKDIP28	
P6.6	25							common I/O port PORT6[6]
P6.7	26							common I/O port PORT6[7]
P7.0	37							common I/O port PORT7[0]
P7.1	38							common I/O port PORT7[1]
P7.2	39							common I/O port PORT7[2]
P7.3	40							common I/O port PORT7[3]
P7.4	53							common I/O port PORT7[4]
P7.5	54							common I/O port PORT7[5]
P7.6	55							common I/O port PORT7[6]
P7.7	56							common I/O port PORT7[7]
Vcc	19	15	14	18	14	10	12	The positive pole of power
Gnd	21	17	16	20	16	12	14	The negative pole of power, Gound

STC MCU Limited

1.9 General Overview of STC15F408AD series MCU

1.9.1 Introduction of STC15F408AD series MCU (In abundant supply)

STC15F408AD series MCU is a single-chip microcontroller based on a high performance 1T architecture 8051 CPU, which is produced by STC MCU Limited. It is a new generation of 8051 MCU of high speed, high stability, wide voltage range, low power consumption and super strong anti-disturbance. Besides, STC15F408AD series MCU is a MCU of super advanced encryption, because it adopts the eighth generation of STC encryption technology. With the enhanced kernel, STC15F408AD series MCU is faster than a traditional 8051 in executing instructions (about 8~12 times the rate of a traditional 8051 MCU), and has a fully compatible instruction set with traditional 8051 series microcontroller. External expensive crystal can be removed by being integrated internal high-precise R/C clock(±0.3%) with ±1% temperature drift (-40℃~+85℃) while ±0.6% in normal temperature (-20℃~+65℃) and wide frenquency adjustable between 5MHz and 35MHz. External reset curcuit also can be removed by being integrated internal highly reliable one with 8 levels optional threshold voltage of reset. The STC15F408AD series MCU retains all features of the traditional 8051. In addition, it has 3-channels CCP/PCA/PWM, 8-channels and 10-bits A/D Converter(300 thousand times per sec.), a high-speed asynchronous serial port----UART (can be regarded as 3 serial ports by shifting among 3 groups of pins) and a high-speed synchronous serial peripheral interface----SPI. STC15F408AD series MCU is usually used in communications which need for serveral UARTs or electrical control or some occasion with strong disturbance.

In Keil C development environment, select the Intel 8052 to compiling and only contain < reg51.h > as header file.

STC15 series MCU with super high-speed CPU core of STC-Y5 works 20% faster than STC early 1T series (such as STC12/STC11/STC10 series) at same clock frequency.

STC MCU Limited.

- Enhanced 8051 Central Processing Unit, 1T, single clock per machine cycle, faster 8~12 times than the rate of a traditional 8051.
- Operating voltage range: 5.5V ~ 2.4V.
- On-chip 8K / 13K FLASH program memory with flexible ISP/IAP capability, can be repeatedly erased more than 100 thousand times.
- on-chip 512 bytes SRAM: 256 byte scratch-pad RAM and 256 bytes of auxiliary RAM
- On-chip EEPROM with large capacity can be repeatedly erased more than 100 thousand times.
- ISP/IAP, In-System-Programming and In-Application-Programming , no need for programmer and emulator.
- 8 channels and 10 bits Analog-to-Digital Converter (ADC), the speed up to 300 thousand times per second, 3 channels PWM also can be used as 3 channels D/A Converter(DAC).
- 3 channels Capture/Compare uints(CCP/PCA/PWM)
  ---- can be used as 3 Times or 3 external Interrupts(can be generated on rising or falling edge) or 3 channels D/A Converter.
- The high-speed pulse function of CCP/PCA can be utilized to to realize 3 channels 9 ~ 16 bit PWM (each channel of which takes less than 0.6% system time)
- The clock output function of T0, T1 or T2 can be utilized to realize 8 ~ 16 bit PWM with a high degree of accuracy (which takes less than 0.4% system time)
- Internal hghly reliable Reset with 8 levels optional threshold voltage of reset, external reset curcuit can be completely removed

- Internal high- precise R/C clock(±0.3%) with ±1% temperature drift (-40℃~+85℃) while ±0.6% (-20℃~+65℃) in normal temperature and wide frenquency adjustable between 5MHz and 35MHz (5.5296MHz / 11.0592MHz / 22.1184MHz / 33.1776MHz).
- No need external crystal and reset, and can output clock and low reset signal from MCU.
- Operating frequency range: 5 ~ 28MHz, is equivalent to traditional 8051 : 60 ~ 336MHz.
- A high-speed asynchronous serial port----UART (can be regarded as 3 serial ports by shifting among 3 groups of pins):
  UART(RxD/P3.0, TxD/P3.1) can be switched to (RxD_2/P3.6, TxD_2/P3.7),
  also can be switched to (RxD_3/P1.6, TxD_3/P1.7).
- A high-speed synchronous serial peripheral interface----SPI.
- Support the function of Encryption Download (to protect your code from being intercepted).
- Support the function of RS485 Control
- Code protection for flash memory access, excellent noise immunity, very low power consumption
- Power management mode: Slow-Down mode, Idle mode(all interrupt can wake up Idle mode), Stop/Power-Down mode.
- Timers which can wake up stop/power-down mode: have internal low-power special wake-up Timer.
- Resource which can wake up stop/power-down mode are: INT0/P3.2, INT1/P3.3 (INT0/INT1, may be generated on both rising and falling edges), $\overline{\text{INT2}}$/P3.6, $\overline{\text{INT3}}$/P3.7, $\overline{\text{INT4}}$/P3.0 ($\overline{\text{INT2}}$/$\overline{\text{INT3}}$/$\overline{\text{INT4}}$, only be generated on falling edge); pins CCP0/CCP1/CCP2; pins T0/T2 (their falling edge can wake up if T0/T2 have been enabled before power-down mode, but no interrupts can be generatetd); internal low-power special wake-up Timer.
- Five Timers/Counters, two 16-bit reloadable Timer/Counter(T0/T2, T0 is compatible with Timer0 of traditional 8051), T0/T2 all can independently achieve external programmable clock output, 3 channels CCP/PWM/PCA also can be used as three timers.
- Programmable clock output function(output by dividing the frequency of the internal system clock or the input clock of external pin):
  The speed of external programmable clock output of 5V MCU is also not more than 13.5MHz, because the output speed of I/O port of STC15 series 5V MCU is not more than 13.5MHz.
  The speed of external programmable clock output of 3.3V MCU is also not more than 8MHz, because the output speed of I/O port of STC15 series 3.3V MCU is not more than 8MHz.
  ① The Programmable clock output of T0 is on P3.5/T0CLKO (output by dividing the frequency of the internal system clock or the input clock of external pin T0/P3.4)
  ② The Programmable clock output of T2 is on P3.0/T2CLKO (output by dividing the frequency of the internal system clock or the input clock of external pin T2/P3.1)
  Two timers/counters in above all can be output by dividing the frequency from 1 to 65536.
  ③ The Programmable clock output of master clock is on P5.4/MCLKO, and its frequency can be divided into MCLK/1, MCLK/2, MCLK/4.

STC MCU Limited.

The master clock can either be internal R/C clock or the external input clock or the external crystal oscillator.

MCLK is the frequency of master clock. MCLKO is the output of master clock.

It is on MCLKO/P3.4 that the Programmable clock output of master clock of STC15 series 8-pin MCU (such as STC15F104W series). However, it is on MCLKO/P5.4 that the Programmable clock output of master clock of other STC15 series MCU including 16-pin or more than 16-pin MCU(such as STC15F2K60S2, STC15F4K60S4 and so on)

- One 15 bits Watch-Dog-Timer with 8-bit pre-scaler (one-time-enabled)
- advanced instruction set, which is fully compatible with traditional 8051 MCU, have hardware multiplication / division command.
- 30/26 common I/O ports are available, their mode is quasi_bidirectional/weak pull-up (traditional 8051 I/O ports mode) after reset, and can be set to four modes: quasi_bidirectional/weak pull-up, strong push-pull/ strong pull-up, input-only/high-impedance and open drain.
  the driving ability of each I/O port can be up to 20mA, but the current of the whole chip don't exceed this maximum 90mA.
  If I/O ports is not enough, it can be extended by connecting a 74HC595(reference price: RMB 0.15 yuan). Besides, cascading several chips also can extend to dozens of I/O ports.
- Package : LQFP32 (9mm x 9mm), SOP28, SKDIP28 (For 28-pin MCU of STC15F/L408AD series, Recommend STC15W401AS series to replace them).
- All products are baked 8 hours in high-temperature 175℃ after be packaged, Manufacture guarantee good quality.
- In Keil C development environment, select the Intel 8052 to compiling and only contain < reg51.h > as header file.

STC MCU Limited.

1.9.2 Block diagram of STC15F408AD series

The internal structure of STC15F408AD series MCU is shown in the block diagram below. STC15F408AD series MCU includes central processor unit(CPU), program memory (Flash), data memory(SRAM), Timers/Counters, power-down wake-up Timer, I/O ports, high-speed A/D converter(ADC), watchdog, high-speed asynchronous serial communication ports---UART, CCP/PWM/PCA, a group of high-speed synchronous serial peripheral interface (SPI), internal high- precise R/C clock, internal hghly reliable Reset and so on. STC15F408AD series MCU almost includes all of the modules required in data acquisition and control, and can be regarded as an on-chip system (SysTem Chip or SysTem on Chip, abbreviated as STC, this is the name origin of Hongjing technology STC Limited).

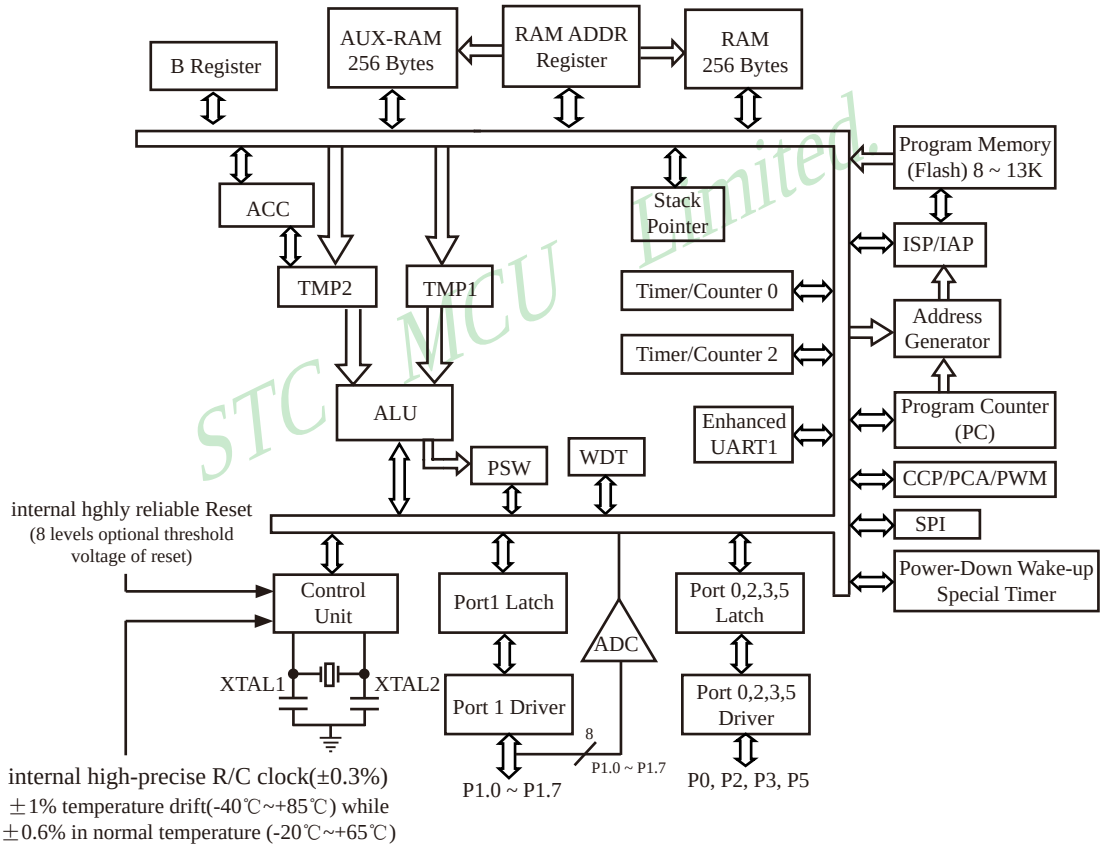

STC15F408AD series Block Diagram

1.9.3 Pin Configurations of STC15F408AD series MCU

All packages meet EU RoHS standards

CCP is abbreviation for Capture, Compare, PWM

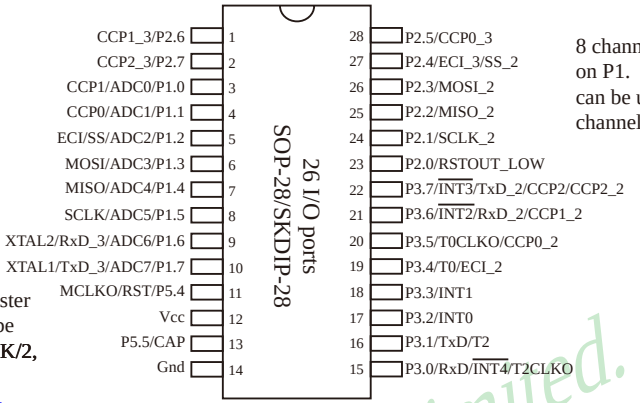

8 channels of A/D Converter are on P1. P1.x/ADCx means P1.x can be used as A/D conversion channel in the pin map.

MCLKO is the output of master clock whose frequency can be divided into MCLK/**1, MCLK/2,** MCLK/4

The master clock can either be internal R/C clock or the external input clock or the external crystal oscillator. MCLK is the frequency of master clock.

SOP-28/SKDIP-28

Recommend UART1 on [P3.6/RxD_2, P3.7/TxD_2] or [P1.6/RxD_3/XTAL2, P1.7/TxD_3/XTAL1]

T0CLKO refers to the programmable clock output of Timer/Counter 0 (output by dividing the frequency of the internal system clock or the input clock of external pin T0/P3.4);

T2CLKO refers to the programmable clock output of Timer/Counter 2 (output by dividing the frequency of the internal system clock or the input clock of external pin T2/P3.1);

In addition to programmable output on the internal system clock, T0CLKO/T2CLKO also can be used as divider by dividing the frequency of the internal system clock or the input clock of external pin T0/T2.

LQFP32(9x9mm)

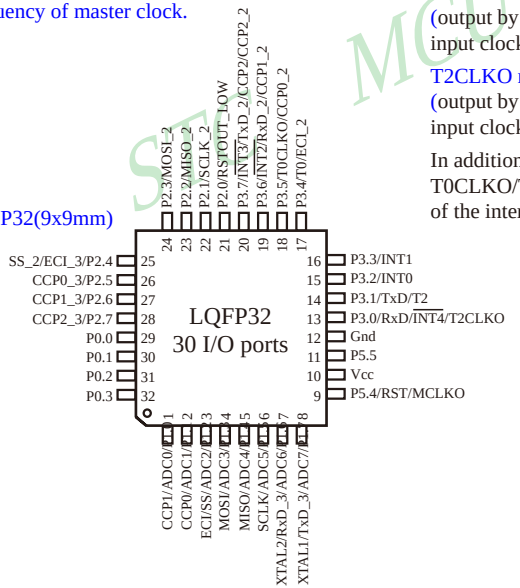

The speed of external programmable clock output of 5V MCU is also not more than 13.5MHz, because the output speed of I/O port of STC15 series 5V MCU is not more than 13.5MHz.

The speed of external programmable clock output of 3.3V MCU is also not more than 8MHz, because the output speed of I/O port of STC15 series 3.3V MCU is not more than 8MHz.

STC MCU Limited.

Mnemonic	Add	Name	7	6	5	4	3	2	1	0	Reset Value
AUXR1 P_SW1	A2H	Auxiliary register 1	S1_S1	S1_S0	CCP_S1	CCP_S0	SPI_S1	SPI_S0	0	DPS	0100,x00x
CLK_DIV (PCON2)	97H	Clock Division register	MCKO_S1	MCKO_S0	ADRJ	Tx_Rx	Tx2_Rx2	CLKS2	CLKS1	CLKS0	0000,x000

UART1/S1 can be switched in 3 groups of pins by selecting the control bits S1_S0 and S1_S1.		
S1_S1	S1_S0	UART1/S1 can be switched between P1 and P3
0	0	UART1/S1 on [P3.0/RxD,P3.1/TxD]
0	1	UART1/S1 on [P3.6/RxD_2,P3.7/TxD_2]
1	0	UART1/S1 on [P1.6/RxD_3/XTAL2,P1.7/TxD_3/XTAL1] when UART1 is on P1, please using internal R/C clock.
1	1	Invalid

Recommed UART1 on [P3.6/RxD_2,P3.7/TxD_2] or [P1.6/RxD_3/XTAL2,P1.7/TxD_3/XTAL1].

CCP can be switched in 3 groups of pins by selecting the control bits CCP_S1 and CCP_S0.		
CCP_S1	CCP_S0	CCP can be switched in P1 and P3
0	0	CCP on [P1.2/ECI,P1.1/CCP0,P1.0/CCP1,P3.7/CCP2]
0	1	CCP on [P3.4/ECI_2,P3.5/CCP0_2,P3.6/CCP1_2,P3.7/CCP2_2]
1	0	CCP on [P2.4/ECI_3,P2.5/CCP0_3,P2.6/CCP1_3,P2.7/CCP2_3]
1	1	Invalid

SPI can be switched in 2 groups of pins by selecting the control bit SPI_S0		
SPI_S1	SPI_S0	SPI can be switched in P1 and P2
0	0	SPI on [P1.2/SS,P1.3/MOSI,P1.4/MISO,P1.5/SCLK]
0	1	SPI on [P2.4/SS_2,P2.3/MOSI_2,P2.2/MISO_2,P2.1/SCLK_2]
1	0	SPI on [P5.4/SS_3,P4.0/MOSI_3,P4.1/MISO_3,P4.3/SCLK_3]
1	1	Invalid

MCKO_S1	MCKO_S0	the control bit of master clock output by dividing the frequency (The master clock can either be internal R/C clock or the external input clock or the external crystal oscillator)
0	0	Master clock do not output external clock
0	1	Master clock output external clock，but its frequency do not be divided，and the output clock frequency = MCLK / 1
1	0	Master clock output external clock，but its frequency is divided by 2，and the output clock frequency = MCLK / 2
1	1	Master clock output external clock，but its frequency is divided by 4，and the output clock frequency = MCLK / 4

The master clock can either be internal R/C clock or the external input clock or the external crystal oscillator. MCLK is the frequency of master clock.

STC15F408AD series MCU output master clock on MCLKO/P5.4

It is on MCLKO/P3.4 that the Programmable clock output of master clock of STC15 series 8-pin MCU (such as STC15F104W series). However, it is on MCLKO/P5.4 that the Programmable clock output of master clock of other STC15 series MCU including 16-pin or more than 16-pin MCU.

STC MCU Limited.

Mnemonic	Add	Name	7	6	5	4	3	2	1	0	Reset Value
CLK_DIV (PCON2)	97H	Clock Division register	MCKO_S1	MCKO_S0	ADRJ	Tx_Rx	Tx2_Rx2	CLKS2	CLKS1	CLKS0	0000,x000

ADRJ：the adjustment bit of ADC result

0：ADC_RES[7:0] store high 8-bit ADC result，ADC_RESL[1:0] store low 2-bit ADC result

1：ADC_RES[1:0] store high 2-bit ADC result，ADC_RESL[7:0] store low 8-bit ADC result

Tx_Rx：the set bit of relay and broadcast mode of UART1

0：UART1 works on normal mode

1：UART1 works on relay and broadcast mode，that to say output the input level state of RxD port to the outside TxD pin in real time, namely the external output of TxD pin can reflect the input level state of RxD port.

the RxD and TxD of UART1 can be switched in 3 groups of pins: [RxD/P3.0, TxD/P3.1];
[RxD_2/P3.6, TxD_2/P3.7];
[RxD_3/P1.6, TxD_3/P1.7].

CLKS2	CLKS1	CLKS0	the control bit of system clock (System clock refers to the master clock that has been divided frequency, which is offered to CPU, UARTs, SPI, Timers, CCP/PWM/PCA and A/D Converter)
0	0	0	Master clock frequency/1, No division
0	0	1	Master clock frequency/2
0	1	0	Master clock frequency/4
0	1	1	Master clock frequency/8
1	0	0	Master clock frequency/16
1	0	1	Master clock frequency/32
1	1	0	Master clock frequency/64
1	1	1	Master clock frequency/128

The master clock can either be internal R/C clock or the external input clock or the external crystal oscillator.

STC MCU Limited.

1.9.4 STC15F408AD series Selection and Price Table

Type 1T 8051 MCU	Operating Voltage (V)	Flash (byte)	SRAM (byte)	UART	SPI	common Timers T0-T2	CCP PCA PWM	Speical Power-down Wake-up Timer	Standard External Interrupts	A/D 8-channel	DPTR	EEP ROM	Internal Low-Voltage Detection Interrupt	WDT	Internal High-reliable Reset (with optional threshold voltage)	Internal High-Precise Clock	Output clock and reset signal from MCU	Encryption Download (to protect your code from being intercepted)	RS485 Control	All Packages LQFP32 SOP28 SKDIP28 Price of packages(RMB ¥) LQFP44	SOP28	SDIP28
STC15F408AD series MCU Selection and Price Table Note: 3 channels CCP/PCA/PWM also can be used as 3 Timers.																						
STC15F408AD	5.5-4.2	8K	512	1	Y	2	3-ch	Y	5	10-bit	1	5K	Y	Y	8-level	Y	Y	Y	Y	¥2.9	¥2.8	¥3.0
IAP15F413AD	5.5-4.2	13K	512	1	Y	3	3-ch	Y	5	10-bit	1	IAP	Y	Y	8-level	Y	Y	Y	Y	¥3.1	¥3.0	¥3.2
																				The program Flash in user program area can be used as EEPROM.		
STC15L408AD series MCU Selection and Price Table																						
STC15L408AD	2.4-3.6	8K	512	1	Y	2	3-ch	Y	5	10-bit	1	5K	Y	Y	8-level	Y	Y	Y	Y	¥2.9	¥2.8	¥3.0
IAP15L413AD	2.4-3.6	13K	512	1	Y	3	3-ch	Y	5	10-bit	1	IAP	Y	Y	8-level	Y	Y	Y	Y	¥3.1	¥3.0	
																				The program Flash in user program area can be used as EEPROM.		

Encryption Download : please burn source code with encryption key onto MCU in the factory. Then, you can make a simple update software just with one "update" button by fisrtly using the fuction "encrytion download" and then "release project" to update yourself code unabled to be intercepted when you need to upgrade your code.

To provide customized IC services

Because the last 7 bytes of the program area is stored mandatorily the contents of only global ID, the program space the user can actually use is 7 bytes smaller than the space shown in the selection table.

Conclusion : STC15F408AD series MCU have: Two16-bit relaodable Timers/Counters that are Timer/Counter 0 and Timer/Counter 2; 3 channels CCP/PWM/PCA (can achieve 3 timers or 3 D/A converters again); special power-down wake-up timer; 5 external interrupts INT0/INT1/$\overline{\text{INT2}}$/$\overline{\text{INT3}}$/$\overline{\text{INT4}}$; a high-speed asynchronous serial port ---- UART; a high-speed synchronous serial peripheral interface ---- SPI; 8 channels and 10 bits high-speed A/D converter; 1 data pointers ---- DPTR.

STC MCU Limited.

1.9.5 Naming rules of STC15F412AD series MCU

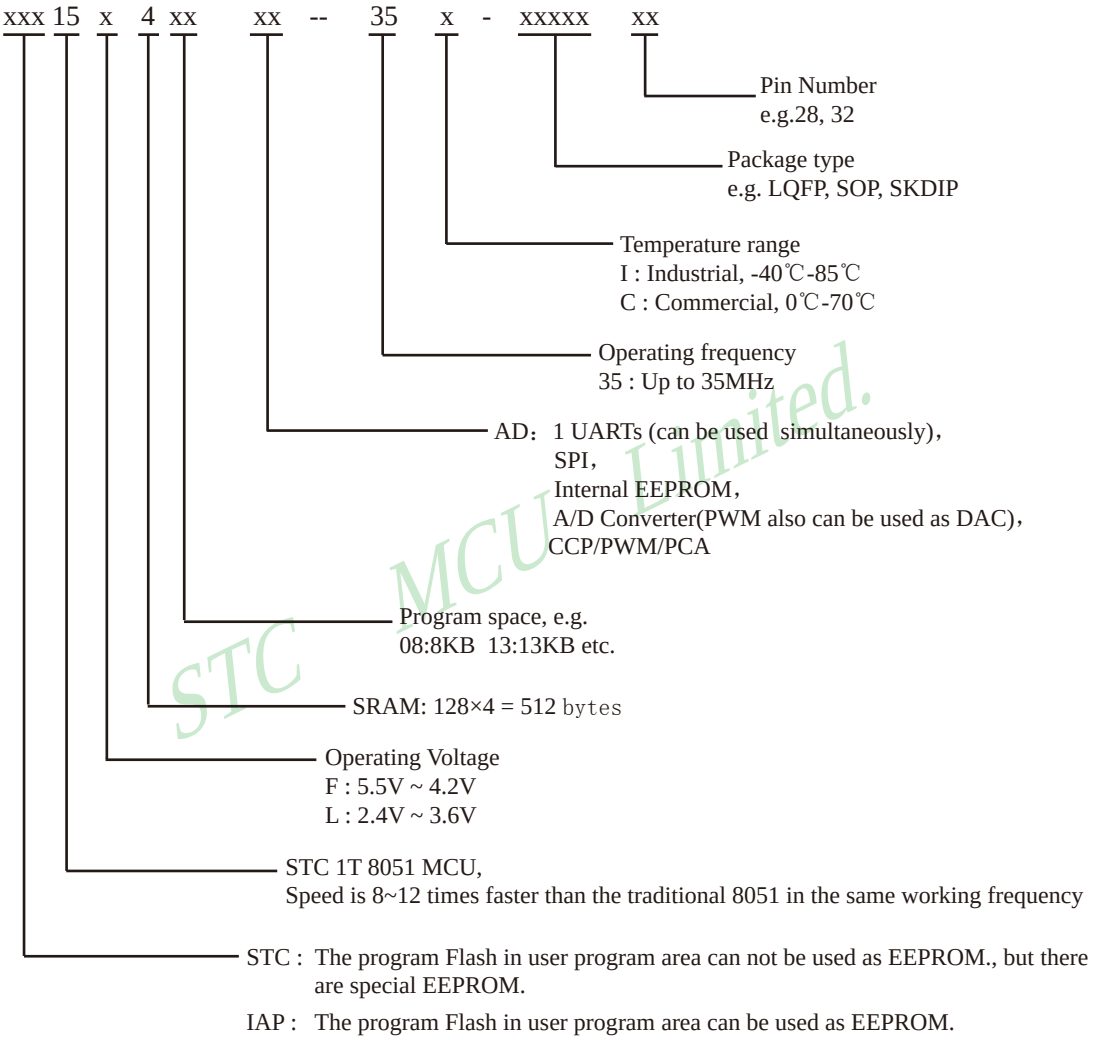

STC MCU Limited.

1.9.6 Application Circuit Diagram for ISP of STC15F408AD series MCU

1.9.6.1 Application Circuit Diagram for ISP using RS-232 Converter

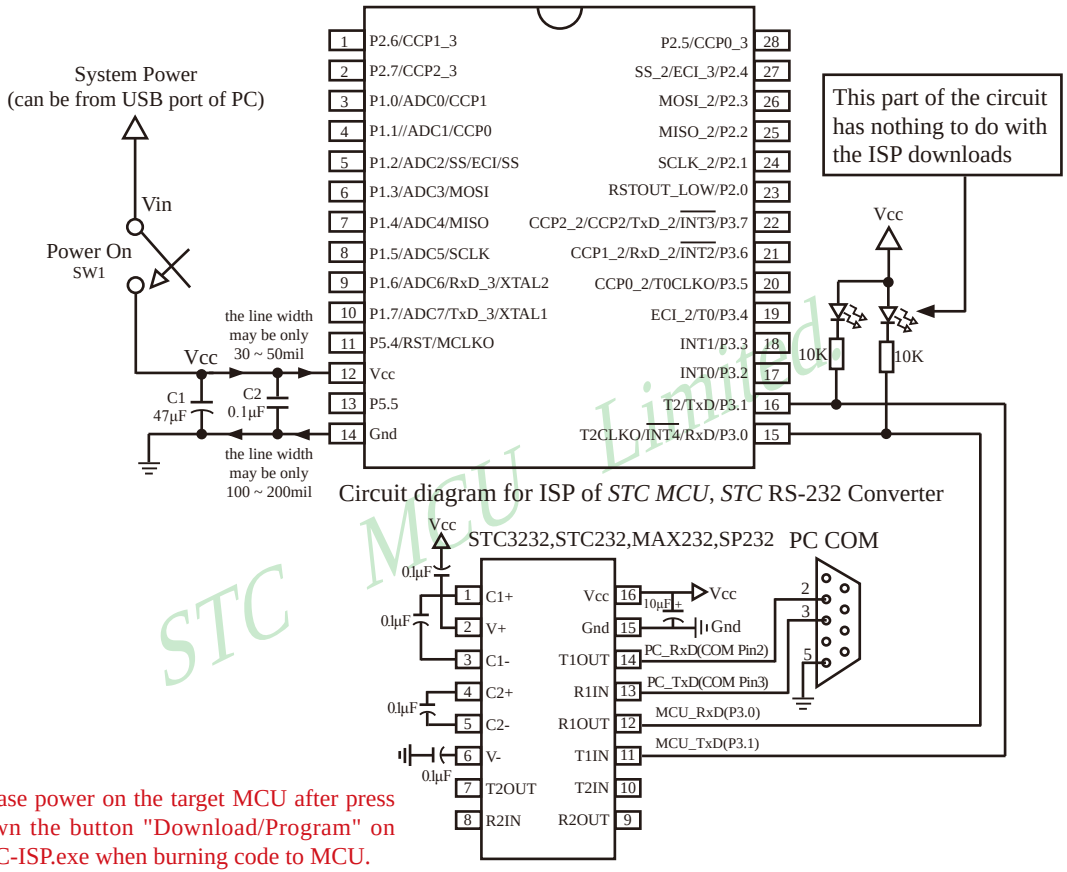

Please power on the target MCU after press down the button "Download/Program" on STC-ISP.exe when burning code to MCU.

Internal hghly reliable Reset, External reset circuit can be completely removed.

P5.4/RST/MCLKO pin factory defaults to the I/O port, which can be set as RST reset pin(active high) through the STC-ISP programmer.

Internal high-precise R/C clock(±3%), ±1% temperature drift (-40℃~+85℃) while ±0.6% in normal temperature (-20℃~+65℃). External expensive crysal can be completely removed.

Recommend to add decoupling capacitor C1(47μF) and C2(0.1μF) between Vcc and Gnd that can remove power noise and improve the anti-interference ability.

1.9.6.2 Application Circuit Diagram for ISP using USB Chip PL-2303SA to convert Serial Port

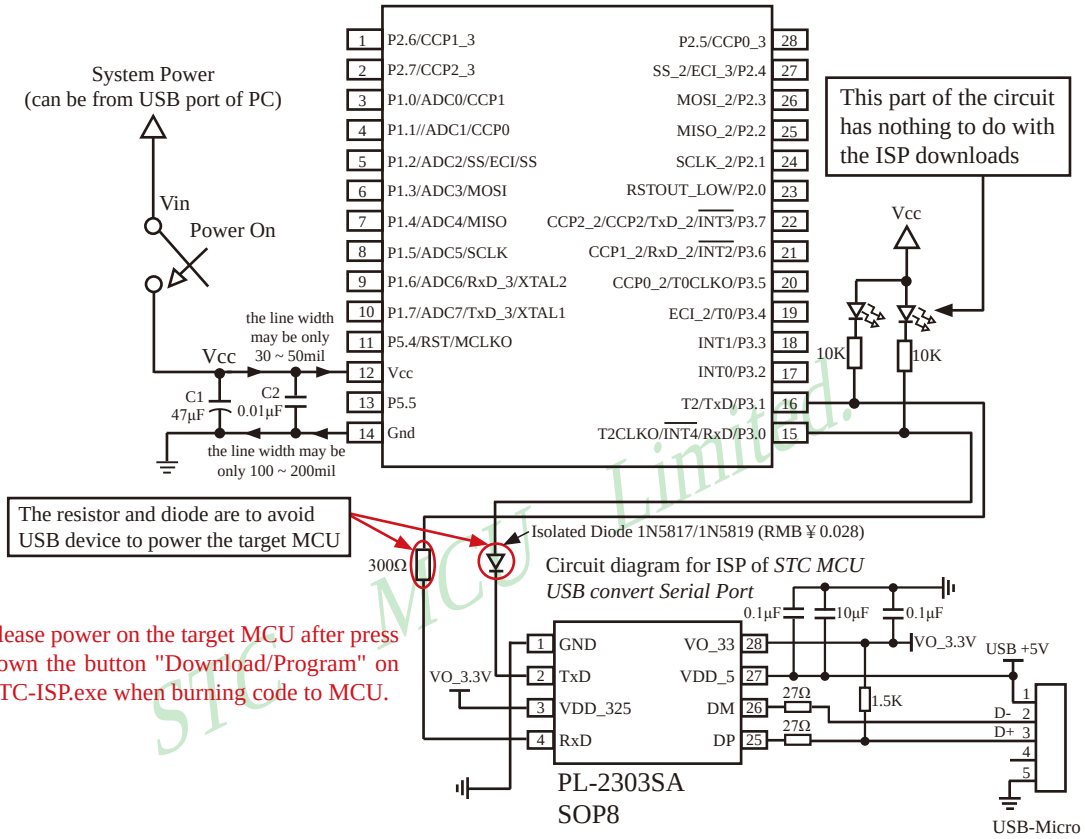

Please power on the target MCU after press down the button "Download/Program" on STC-ISP.exe when burning code to MCU.

Internal hghly reliable Reset, External reset circuit can be completely removed.

P5.4/RST/MCLKO pin factory defaults to the I/O port, which can be set as RST reset pin(active high) through the STC-ISP programmer.

Internal high-precise R/C clock(±3%), ±1% temperature drift (-40℃~+85℃) while ±0.6% in normal temperature (-20℃~+65℃). External expensive crysal can be completely removed.

Recommend to add decoupling capacitor C1(47μF) and C2(0.1μF) between Vcc and Gnd that can remove power noise and improve the anti-interference ability.

1.9.6.3 Application Circuit Diagram for ISP using USB Chip PL-2303HXD / PL-2303HX to convert Serial Port

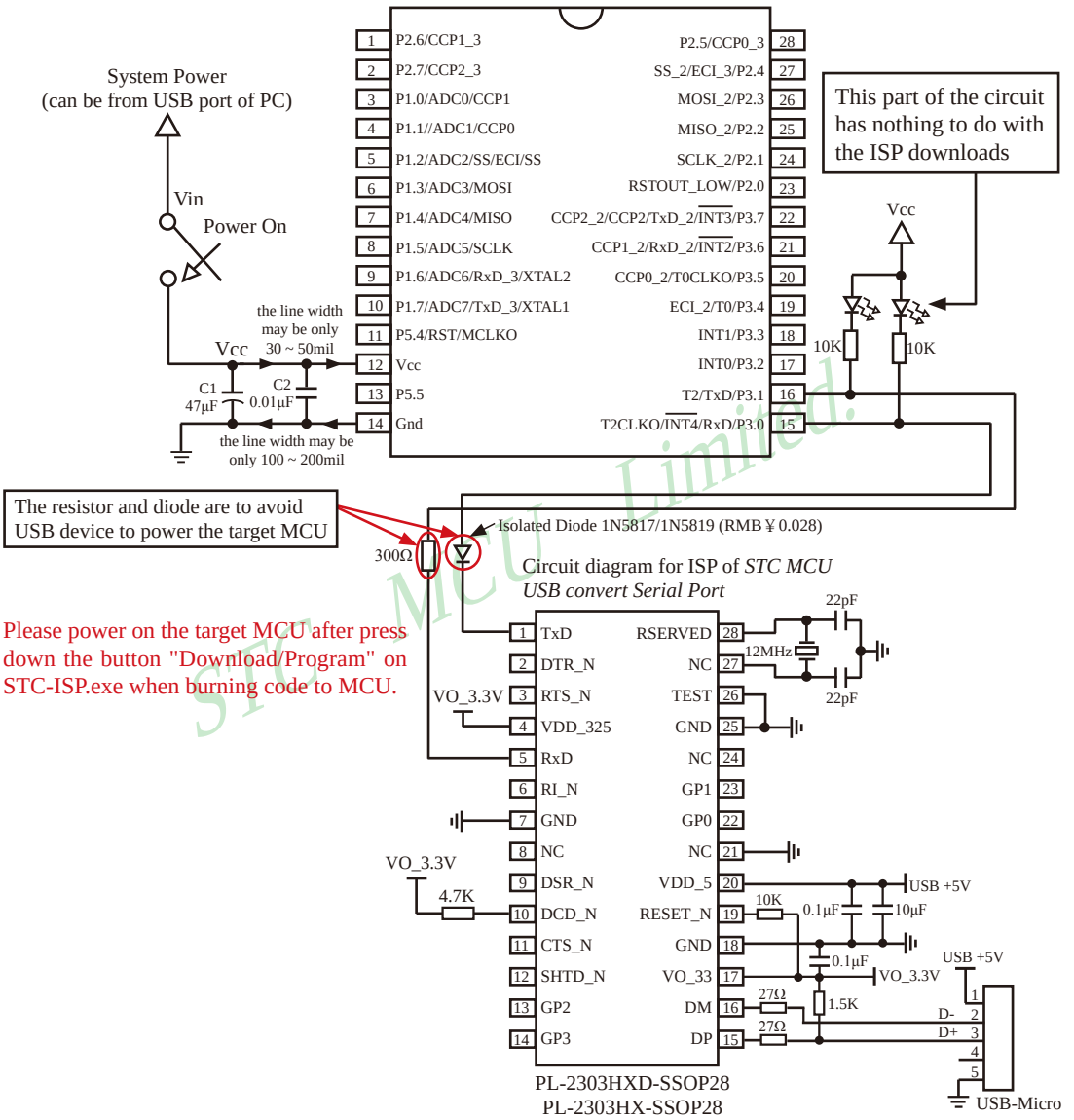

Internal hghly reliable Reset, External reset circuit can be completely removed.

P5.4/RST/MCLKO pin factory defaults to the I/O port, which can be set as RST reset pin(active high) through the STC-ISP programmer.

Internal high-precise R/C clock(±3%), ±1% temperature drift (-40℃~+85℃) while ±0.6% in normal temperature (-20℃ ~+65℃). External expensive crysal can be completely removed.

Recommend to add decoupling capacitor C1(47μF) and C2(0.1μF) between Vcc and Gnd that can remove power noise and improve the anti-interference ability.

1.9.6.4 Application Circuit Diagram for ISP directly using USB port

——P3.0/P3.1 of STC15W4K series and IAP15W4K58S4 connect directly with D-/D+ of USB

Note：P0 ports can be multiplexed as Address/Data bus，not as A/D Converter. 8 channels of A/D Converter are on P1.

Consequently：P0.x/ADx means that P0.x can be used as Address/Data bus, while P1.x/ADCx means P1.x can be used as A/D conversion channel in the pin map.

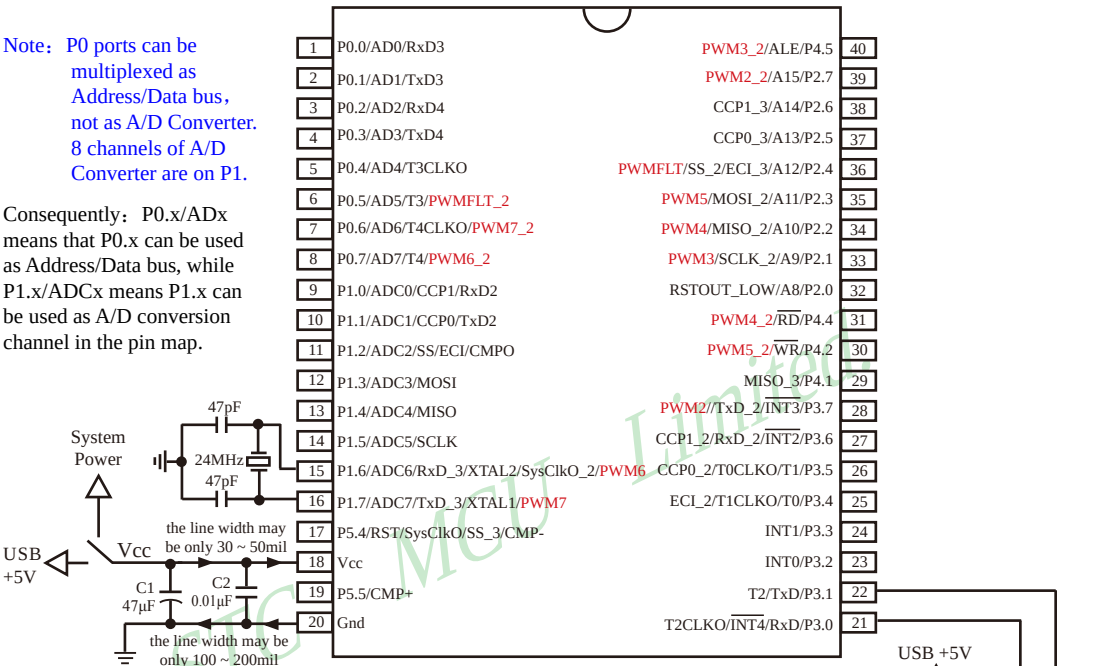

The MCU can be powered by USB port or system power

Application Circuit Diagram for ISP directly using USB port, USB-ISP. MCU P3.0/P3.1 connect directly with D-/D+ of USB

The Application Circuit Diagram applies to STC15W4K series and IAP15W4K58S4 MCU only.

USB-Micro

STC MCU Limited

1.9.7 Pin Descriptions of STC15F408AD series MCU

MNEMONIC	Pin Number		DESCRIPTION	
	SOP28/ SKDIP28	LQFP32		
P0.0		29	common I/O port PORT0[0]	
P0.1		30	common I/O port PORT0[1]	
P0.2		31	common I/O port PORT0[2]	
P0.3		32	common I/O port PORT0[3]	
P1.0/ADC0/ CCP1	3	1	P1.0	common I/O port PORT1[0]
			ADC0	ADC input channel-0
			CCP1	Capture of external signal(measure frequency or be used as external interrupts)、high-speed Pulse and Pulse-Width Modulation output channel-1
P1.1/ADC1/ CCP0	4	2	P1.1	common I/O port PORT1[1]
			ADC1	ADC input channel-1
			CCP0	Capture of external signal(measure frequency or be used as external interrupts)、high-speed Pulse and Pulse-Width Modulation output channel-0
P1.2/ADC2/SS/ ECI	5	3	P1.2	common I/O port PORT1[2]
			ADC2	ADC input channel-2
			SS	Slave selection signal of synchronous serial peripheral interface----SPI
			ECI	External pulse input pin of CCP/PCA counter
P1.3/ADC3/ MOSI	6	4	P1.3	common I/O port PORT1[3]
			ADC3	ADC input channel-3
			MOSI	Master Output Slave Input of SPI
P1.4/ADC4/ MISO	7	5	P1.4	common I/O port PORT1[4]
			ADC4	ADC input channel-4
			MISO	Master Iutput Slave Onput of SPI
P1.5/ADC5/ SCLK	8	6	P1.5	common I/O port PORT1[5]
			ADC5	ADC input channel-5
			SCLK	Clock Signal of synchronous serial peripheral interface----SPI
P1.6/ADC6/ RxD_3/XTAL2	9	7	P1.6	common I/O port PORT1[6]
			ADC6	ADC input channel-6
			RxD_3	Receive Data Port of UART
			XTAL2	Output from the inverting amplifier of internal clock circuit. This pin should be floated when an external oscillator is used.
P1.7/ADC7/ TxD_3/XTAL1	10	8	P1.7	common I/O port PORT1[7]
			ADC7	ADC input channel-7
			TxD_3	Transit Data Port of UART
			XTAL1	Input to the inverting oscillator amplifier of internal clock circuit. Receives the external oscillator signal when an external oscillator is used.

STC MCU Limited.

MNEMONIC	Pin Number		DESCRIPTION	
	SOP28/ SKDIP28	LQFP32		
P2.0/ RSTOUT_LOW	23	21	P2.0	common I/O port PORT2[0]
			RSTOUT_LOW	the pin output low after power-on and during reset, which can be set to output high by software
P2.1/SCLK_2	24	22	P2.1	common I/O port PORT2[1]
			SCLK_2	Clock Signal of synchronous serial peripheral interface----SPI
P2.2/MISO_2	25	23	P2.2	common I/O port PORT2[2]
			MISO_2	Master Iutput Slave Onput of SPI
P2.3/MOSI_2	26	24	P2.3	common I/O port PORT2[3]
			MOSI_2	Master Output Slave Input of SPI
P2.4/ECI_3/SS_2	27	25	P2.4	common I/O port PORT2[4]
			ECI_3	External pulse input pin of CCP/PCA counter
			SS_2	Slave selection signal of synchronous serial peripheral interface----SPI
P2.5/CCP0_3	28	26	P2.5	common I/O port PORT2[5]
			CCP0_3	Capture of external signal(measure frequency or be used as external interrupts)、high-speed Pulse and Pulse-Width Modulation output channel-0
P2.6/CCP1_3	1	27	P2.6	common I/O port PORT2[6]
			CCP1_3	Capture of external signal(measure frequency or be used as external interrupts)、high-speed Pulse and Pulse-Width Modulation output channel-1
P2.7/CCP2_3	2	28	P2.7	common I/O port PORT2[7]
			CCP2_3	Capture of external signal(measure frequency or be used as external interrupts)、high-speed Pulse and Pulse-Width Modulation output channel-2
P3.0/RxD/$\overline{\text{INT4}}$ /T2CLKO	15	13	P3.0	common I/O port PORT3[0]
			RxD	Receive Data Port of UART1
			$\overline{\text{INT4}}$	External interrupt 4, which only can be generated on falling edge. /INT4 supports power-down waking-up
			T2CLKO	T2 Clock Output The pin can be configured for T2CLKO by setting INT_CLKO[2] bit /T2CLKO
P3.1/TxD/T2	16	14	P3.1	common I/O port PORT3[1]
			TxD	Transit Data Port of UART1
			T2	External input of Timer/Counter 2
P3.2/INT0	17	15	P3.2	common I/O port PORT3[2]
			INT0	External interrupt 0, which both can be generated on rising and falling edge. INT0 only can generate interrupt on falling edge if IT0 (TCON.0) is set to 1. And, INT0 both can generate interrupt on rising and falling edge if IT0 (TCON.0) is set to 0.

STC MCU Limited.

MNEMONIC	Pin Number		DESCRIPTION	
	SOP28/ SKDIP28	LQFP32		
P3.3/INT1	18	16	P3.3	common I/O port PORT3[3]
			INT1	External interrupt 1, which both can be generated on rising and falling edge. INT1 only can generate interrupt on falling edge if IT1 (TCON.2) is set to 1. And, INT1 both can generate interrupt on rising and falling edge if IT1 (TCON.2) is set to 0. INT1 supports power-down waking-up
P3.4/T0/ECI_2	19	17	P3.4	common I/O port PORT3[4]
			T0	External input of Timer/Counter 0
			ECI_2	External pulse input pin of CCP/PCA counter
P3.5/T0CLKO/ CCP0_2	20	18	P3.5	common I/O port PORT3[5]
			T0CLKO	T0 Clock Output The pin can be configured for T0CLKO by setting INT_CLKO[0] bit /T0CLKO
			CCP0_2	Capture of external signal(measure frequency or be used as external interrupts)、high-speed Pulse and Pulse-Width Modulation output channel-0
P3.6/$\overline{\text{INT2}}$/RxD_2 /CCP1_2	21	19	P3.6	common I/O port PORT3[6]
			$\overline{\text{INT2}}$	External interrupt 2, which only can be generated on falling edge. /INT2 supports power-down waking-up
			RxD_2	Receive Data Port of UART1
			CCP1_2	Capture of external signal(measure frequency or be used as external interrupts)、high-speed Pulse and Pulse-Width Modulation output channel-1
P3.7/$\overline{\text{INT3}}$/TxD_2/ CCP2/CCP2_2	22	20	P3.7	common I/O port PORT3[7]
			$\overline{\text{INT3}}$	External interrupt 3, which only can be generated on falling edge. $\overline{\text{INT3}}$ supports power-down waking-up
			TxD_2	Transit Data Port of UART
			CCP2	Capture of external signal(measure frequency or be used as external interrupts)、high-speed Pulse and Pulse-Width Modulation output channel-2
			CCP2_2	Capture of external signal(measure frequency or be used as external interrupts)、high-speed Pulse and Pulse-Width Modulation output channel-2
P5.4/RST/ MCLKO	11	9	P5.4	common I/O port PORT5[4]
			RST	Reset pin. A high on this pin for at least two machine cycles will reset the device.
			MCLKO	Master clock output; the output frequency can be MCLK/1, MCLK/2 and MCLK/4. The master clock can either be internal R/C clock or the external input clock or the external crystal oscillator.
P5.5	13	11	common I/O port PORT5[5]	
Vcc	12	10	The positive pole of power	
Gnd	14	12	The negative pole of power, Gound	

STC MCU Limited.

1.10 Package Dimension Drawings of STC15 series MCU

1.10.1 Dimension Drawings of DFN8

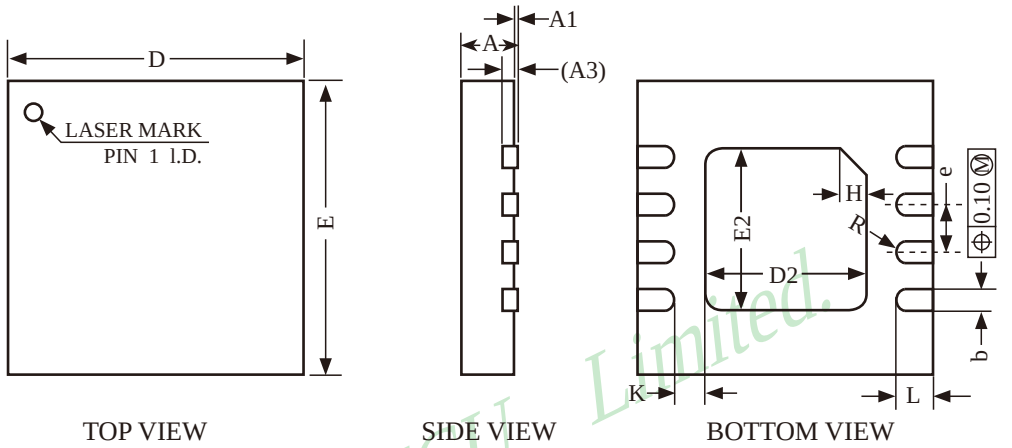

STC MCU Limited.

COMMON DIMENSIONS			
UNITS OF MEASURE = mm (MILLIMETER)			
SYMBOL	MIN.	NOM.	MAX.
A	0.70	0.75	0.80
A1	0.00	0.02	0.05
A3		0.20REF	
b	0.25	0.30	0.35
D	3.90	4.00	4.10
E	3.90	4.00	4.10
D2	2.10	2.20	2.30
E2	2.10	2.20	2.30
e	0.55	0.65	0.75
H		0.35REF	
K		0.35REF	
L	0.45	0.55	0.65
R	0.13	-	-

Note:

All dimensions do not include mold flash or protrusions

1.10.2 Dimension Drawings of SOP8

Dimension Drawings of SOP8

8-PIN SMALL OUTLINE PACKAGE (SOP8)
Dimensions in Inches

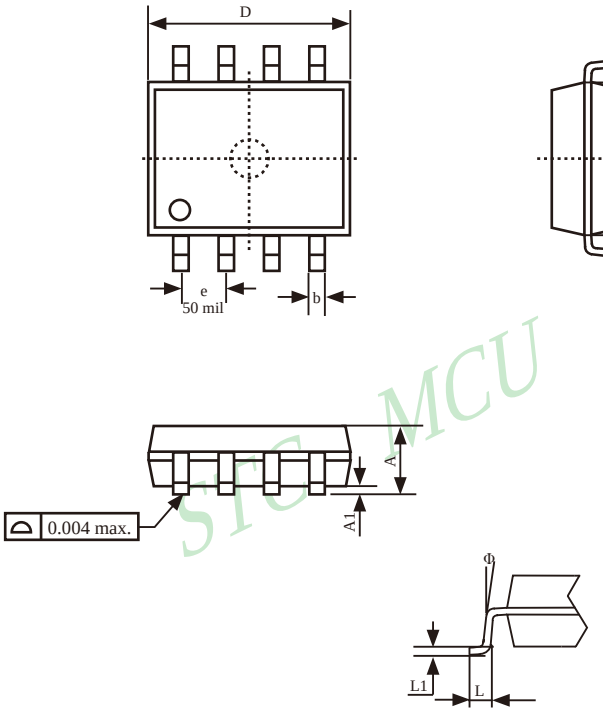

STC MCU Limited.

COMMON DIMENSIONS			
(UNITS OF MEASURE = INCH)			
SYMBOL	MIN.	NOM.	MAX.
A	0.053	-	0.069
A1	0.004	-	0.010
b	-	0.016	-
D	0.189	-	0.196
E	0.228	-	0.244
E1	0.150	-	0.157
e	0.050		
L	0.016	-	0.050
L1	0.008		
Φ	0^0	-	8^0

UNIT: INCH, 1 inch = 1000 mil

1.10.3 Dimension Drawings of DIP8

Dimension Drawings of DIP8

8-Pin Plastic Dual Inline Package (DIP8)

Dimensions in Inches

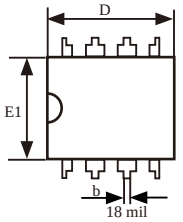

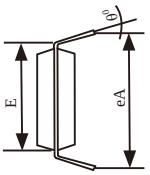

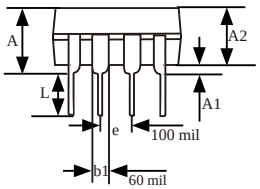

COMMON DIMENSIONS (UNITS OF MEASURE = INCH)			
SYMBOL	MIN.	NOM.	MAX.
A	-	-	0.210
A1	0.015	-	-
A2	0.125	0.130	0.135
b	-	0.018	-
b1	-	0.060	-
D	0.355	0.365	0.400
E	-	0.300	-
E1	0.245	0.250	0.255
e	-	0.100	-
L	0.115	0.130	0.150
θ^0	0	7	15
eA	0.335	0.355	0.375

UNIT: INCH, 1 inch = 1000 mil

STC MCU Limited.

1.10.4 Dimension Drawings of SOP16

Dimension Drawings of SOP16

16-PIN SMALL OUTLINE PACKAGE (SOP16)

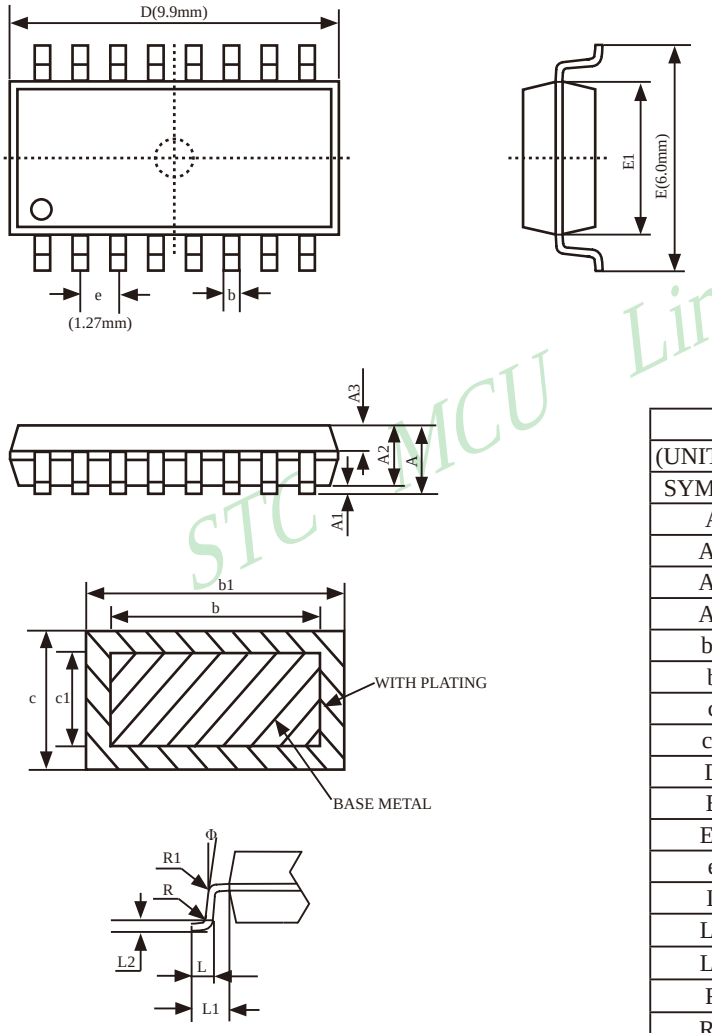

STC MCU Limited.

COMMON DIMENSIONS			
(UNITS OF MEASURE = MILLMETER)			
SYMBOL	MIN	NOM	MAX
A	1.35	1.60	1.75
A1	0.10	0.15	0.25
A2	1.25	1.45	1.65
A3	0.55	0.65	0.75
b1	0.36	-	0.49
b	0.35	0.40	0.45
c	0.16	-	0.25
c1	0.15	0.20	0.25
D	9.80	9.90	10.00
E	5.80	6.00	6.20
E1	3.80	3.90	4.00
e		1.27	
L	0.45	0.60	0.80
L1		1.04	
L2		0.25	
R	0.07	-	-
R1	0.07	-	-
Φ	6^0	8^0	10^0

1.10.5 Dimension Drawings of DIP16

Dimension Drawings of DIP16

16-Pin Plastic Dual Inline Package (DIP16)
Dimensions in Inches and Millmeters

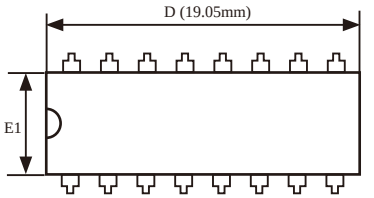

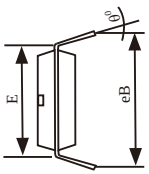

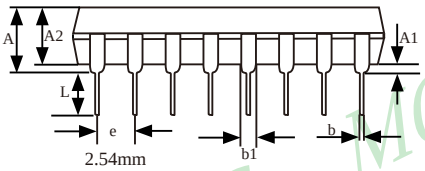

COMMON DIMENSIONS			
(UNITS OF MEASURE = MILLMETER)			
SYMBOL	MIN	NOM	MAX
A	-	-	4.80
A1	0.50	-	-
A2	3.10	3.30	3.50
b	0.38	-	0.55
b1	0.38	0.46	0.51
D	18.95	19.05	19.15
E	7.62	7.87	8.25
E1	6.25	6.35	6.45
e		2.54	
eB	7.62	8.80	10.90
L	2.92	3.30	3.81
θ^{0S}	0	7	15

STC MCU Limited.

1.10.6 Dimension Drawings of SOP20

Dimension Drawings of SOP20

20-Pin Small Outline Package (SOP20)

Dimensions in Inches and (Millimeters)

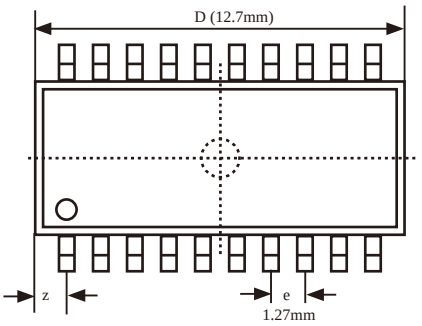

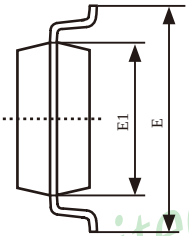

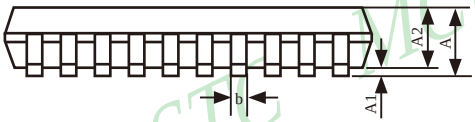

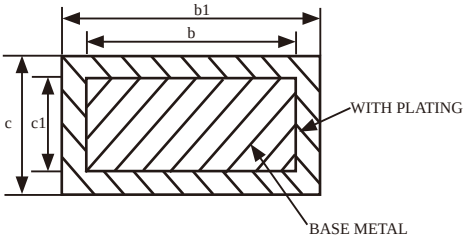

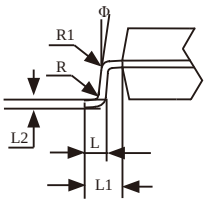

COMMON DIMENSIONS			
(UNITS OF MEASURE = MILLMETER/ mm)			
SYMBOL	MIN.	NOM.	MAX.
A	2.465	2.515	2.565
A1	0.100	0.150	0.200
A2	2.100	2.300	2.500
b1	0.366	0.426	0.486
b	0.356	0.406	0.456
c	0.234	-	0.274
c1	-	0.254	-
D	12.500	12.700	12.900
E	10.206	10.306	10.406
E1	7.450	7.500	7.550
e	1.27		
L	0.800	0.864	0.900
L1	1.303	1.403	1.503
L2	-	0.274	-
R	-	0.300	-
R1	-	0.200	-
Φ	0^0	-	10^0
z	-	0.660	-

STC MCU Limited.

1.10.7 Dimension Drawings of TSSOP20

20-Pin Plastic Thin Shrink Small Outline Package (TSSOP20)

Dimensions in Millimeters

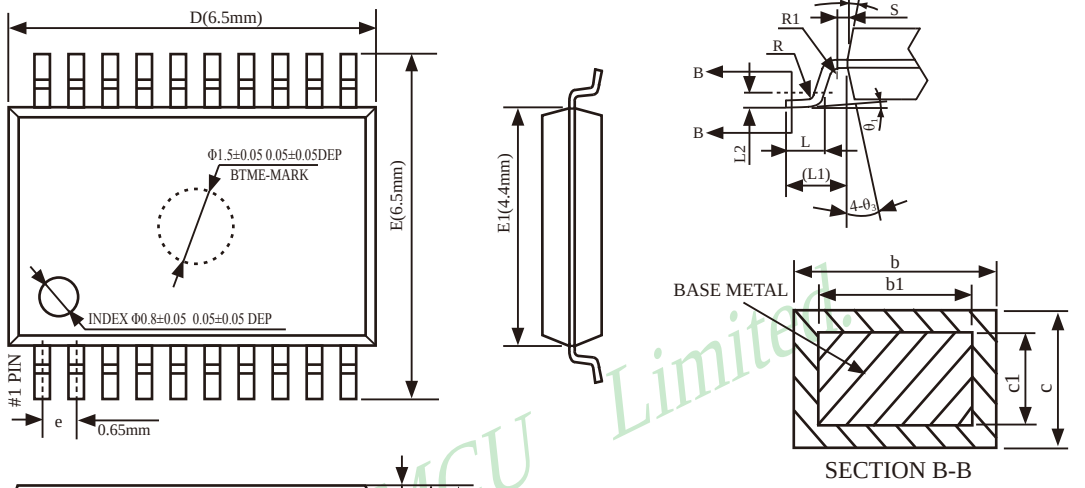

COMMON DIMENSIONS (UNITS OF MEASURE = MILLMETER)			
SYMBOL	MIN	NOM	MAX
A	-	-	1.2
A1	0.05	-	0.15
A2	0.90	1.00	1.05
A3	0.34	0.44	0.54
b	0.20	-	0.28
b1	0.20	-	0.24
c	0.10	-	0.19
c1	0.10	0.13	0.15
D	6.40	6.50	6.60
E	6.20	6.50	6.60
E1	4.30	4.40	4.50
e	0.65BSC		
L	0.45	0.60	0.75
L1	1.00REF		
L2	0.25BSC		
R	0.09	-	-
R1	0.09	-	-
S	0.20	-	-
θ_1	0^0	-	8^0
θ_2	10^0	12^0	14^0
θ_3	10^0	12^0	14^0

NOTES:
ALL DIMENSIONS REFER TO JEDEC STANDARD MO-153 AC
DO NOT INCLUDE MOLD FLASH OR PROTRUSIONS.

STC MCU Limited

1.10.8 Dimension Drawings of LSSOP20

Dimension Drawings of LSSOP20

20-Pin Plastic Shrink Small Outline Package (LSSOP20)

LSSOP-20, 6.4mm x 6.4mm

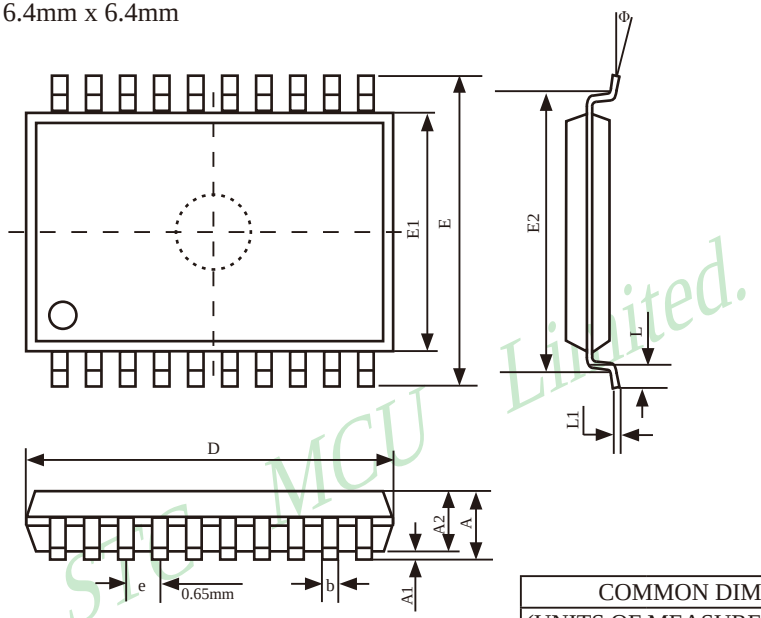

STC MCU Limited.

COMMON DIMENSIONS			
(UNITS OF MEASURE = MILLMETER)			
SYMBOL	MIN	NOM	MAX
A	-	-	1.85
A1	0.05	-	-
A2	1.40	1.50	1.60
b	0.17	0.22	0.32
D	6.40	6.50	6.60
E	6.20	6.40	6.60
E1	4.30	4.40	4.50
E2	-	5.72	-
e	0.57	0.65	0.73
L	0.30	0.50	0.70
L1	0.1	0.15	0.25
Φ	0^0	-	8^0

1.10.9 Dimension Drawings of DIP20

Dimension Drawings of DIP20

20-Pin Plastic Dual Inline Package (DIP20)

Dimensions in Inches

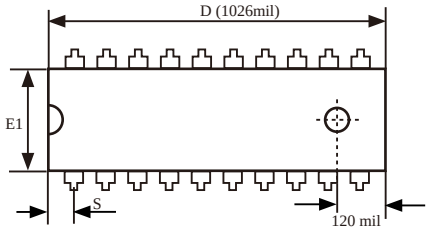

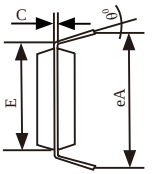

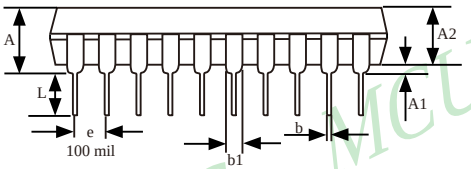

COMMON DIMENSIONS			
(UNITS OF MEASURE = INCH)			
SYMBOL	MIN.	NOM.	MAX.
A	-	-	0.175
A1	0.015	-	-
A2	0.125	0.13	0.135
b	0.016	0.018	0.020
b1	0.058	0.060	0.064
C	0.008	0.010	0.11
D	1.012	1.026	1.040
E	0.290	0.300	0.310
E1	0.245	0.250	0.255
e	0.090	0.100	0.110
L	0.120	0.130	0.140
θ^0	0	-	15
eA	0.355	0.355	0.375
S	-	-	0.075

UNIT: INCH, 1 inch = 1000 mil

STC MCU Limited.

1.10.10 Dimension Drawings of SOP28

Dimension Drawings of SOP28

28-Pin Small Outline Package (SOP28)

Dimensions in Millimeters

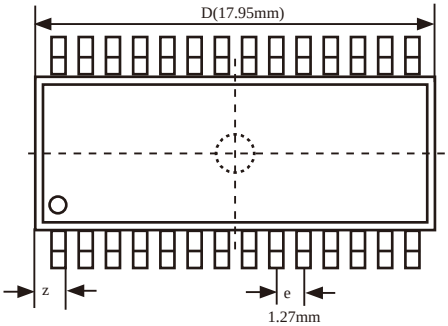

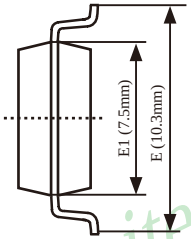

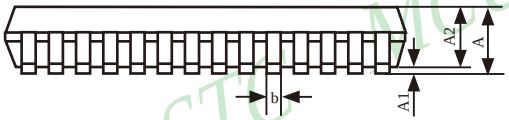

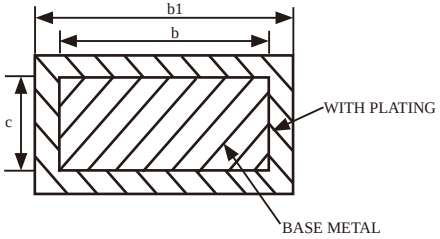

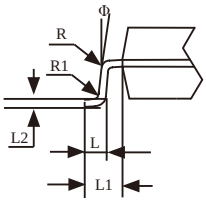

COMMON DIMENSIONS			
(UNITS OF MEASURE = MILLMETER / mm)			
SYMBOL	MIN.	NOM.	MAX.
A	2.465	2.515	2.565
A1	0.100	0.150	0.200
A2	2.100	2.300	2.500
b	0.356	0.406	0.456
b1	0.366	0.426	0.486
c	-	0.254	-
D	17.750	17.950	18.150
E	10.100	10.300	10.500
E1	7.424	7.500	7.624
e	1.27		
L	0.764	0.864	0.964
L1	1.303	1.403	1.503
L2	-	0.274	-
R	-	0.200	-
R1	-	0.300	-
Φ	0^0	-	10^0
z	-	0.745	-

STC MCU Limited.

1.10.11 Dimension Drawings of TSSOP28

28-Pin Plastic Thin Shrink Small Outline Package (TSSOP28)

Dimensions in Millimeters

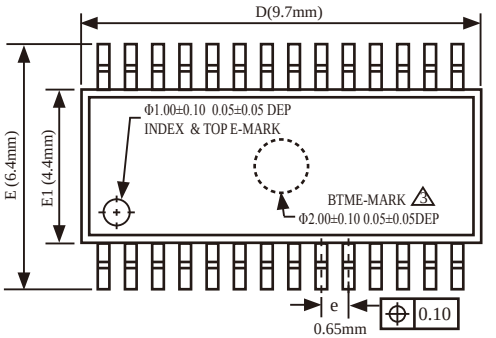

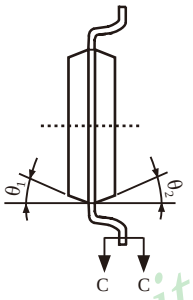

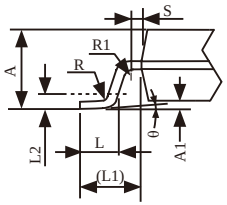

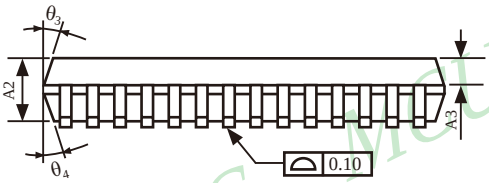

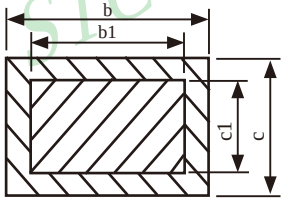

SECTION C-C
NORMAL PLATING

COMMON DIMENSIONS (UNITS OF MEASURE = MILLMETER / mm)			
SYMBOL	MIN.	NOM.	MAX.
A	-	-	1.20
A1	0.05	-	0.15
A2	0.90	1.00	1.05
A3	0.34	0.44	0.54
b	0.20	-	0.29
b1	0.19	0.22	0.25
c	0.13	-	0.18
c1	0.12	0.13	0.14
D	9.60	9.70	9.80
E	6.20	6.40	6.60
E1	4.30	4.40	4.50
e	0.55	0.65	0.75
L	0.45	0.60	0.75
L1	1.00REF		
L2	0.25BSC		
R	0.09	-	-
R1	0.09	-	-
S	0.20	-	-
θ	0^0	-	8^0
θ_1	10^0	12^0	14^0
θ_2	10^0	12^0	14^0
θ_3	10^0	12^0	14^0
θ_4	10^0	12^0	14^0

NOTES:
ALL DIMENSIONS REFER TO JEDEC STANDARD MO-153 AE
DO NOT INCLUDE MOLD FLASH OR PROTRUSIONS.

STC MCU Limited.

1.10.12 Dimension Drawings of SKDIP28

Dimension Drawings of SKDIP28

28-Pin Plastic Dual-In-line Package (SKDIP28)
Dimensions in Inches

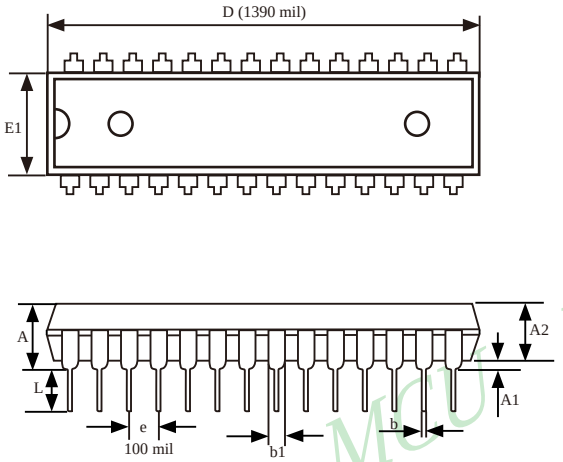

STC MCU Limited.

COMMON DIMENSIONS (UNITS OF MEASURE = INCH)			
SYMBOL	MIN.	NOM.	MAX.
A	-	-	0.210
A1	0.015	-	-
A2	0.125	0.13	0.135
b	-	0.018	-
b1	-	0.060	-
D	1.385	1.390	1.40
E	-	0.310	-
E1	0.283	0.288	0.293
e	-	0.100	-
L	0.115	0.130	0.150
θ^0	0	7	15
eA	0.330	0.350	0.370

UNIT: INCH, 1 inch = 1000 mil

1.10.13 Dimension Drawings of QFN28

QFN28 OUTLINE PACKAGE

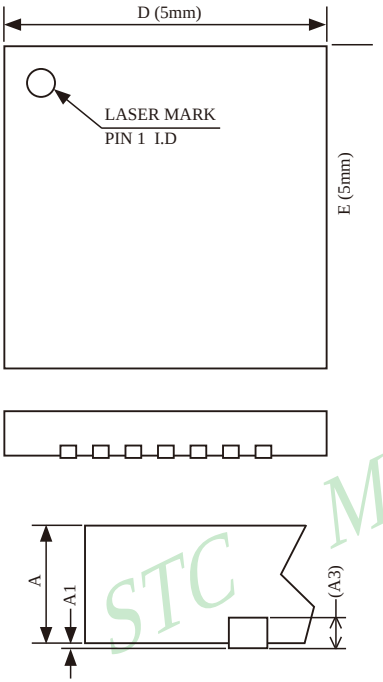

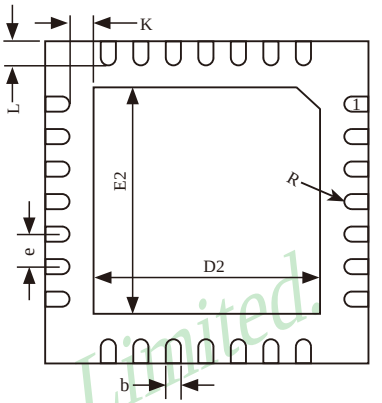

STC MCU Limited.

COMMON DIMENSIONS			
(UNITS OF MEASURE = MILLMETER /mm)			
SYMBOL	MIN.	NOM.	MAX.
A	0.70	0.75	0.80
A1	0	0.02	0.05
A3		0.20REF	
b	0.20	0.25	0.30
D	4.90	5.00	5.10
E	4.90	5.00	5.10
D2	3.35	3.50	3.65
E2	3.35	3.50	3.65
e	0.40	0.50	0.60
K	0.20	-	-
L	0.30	0.40	0.50
R	0.09	-	-

NOTES:
ALL DIMENSIONS REFER TO JEDEC STANDARD MO-220 WHHD-3

1.10.14 Dimension Drawings of LQFP32

LQFP32 OUTLINE PACKAGE

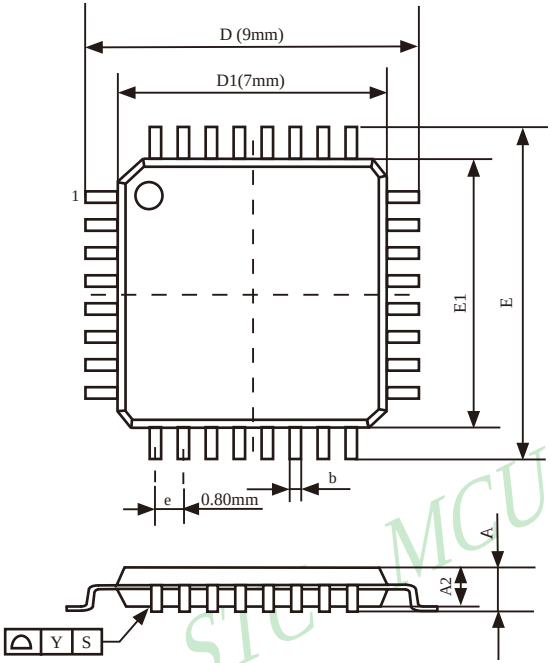

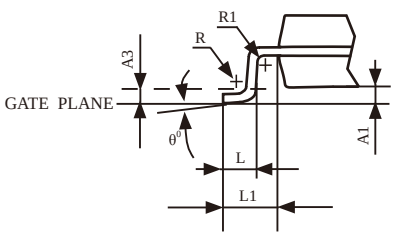

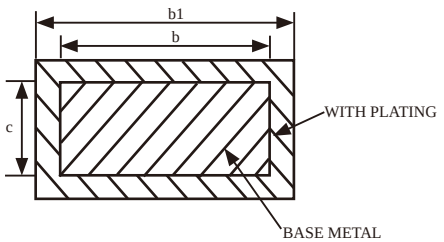

VARIATIONS (ALL DIMENSIONS SHOWN IN MM)

SYMBOLS	MIN.	NOM	MAX.
A	1.45	1.55	1.65
A1	0.01	-	0.21
A2	1.35	1.40	1.45
A3	-	0.254	-
D	8.80	9.00	9.20
D1	6.90	7.00	7.10
E	8.80	9.00	9.20
E1	6.90	7.00	7.10
e		0.80	
b	0.3	0.35	0.4
b1	0.31	0.37	0.43
c	-	0.127	-
L	0.43	-	0.71
L1	0.90	1.00	1.10
R	0.1	-	0.25
R1	0.1	-	-
θ^0	0^0	-	10^0

NOTES:
1. All dimensions are in mm
2. Dim D1 AND E1 does not include plastic flash.
Flash:Plastic residual around body edge after de junk/singulation
3. Dim b does not include dambar protrusion/ intrusion.
4. Plating thickness 0.05~0.015 mm.

STC MCU Limited.

1.10.15 Dimension Drawings of SOP32

Dimension Drawings of SOP32(SOP32 is not producted now, LQFP-32 is recommended)

32-Pin Small Outline Package (SOP32)

Dimensions in Millimeters

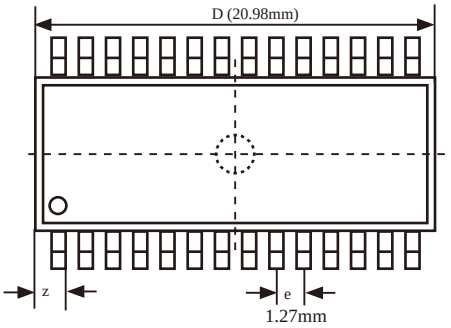

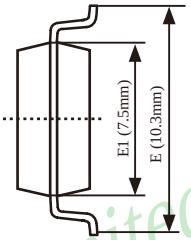

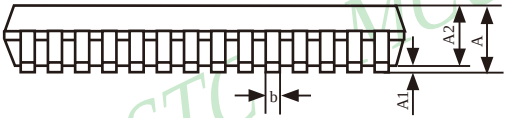

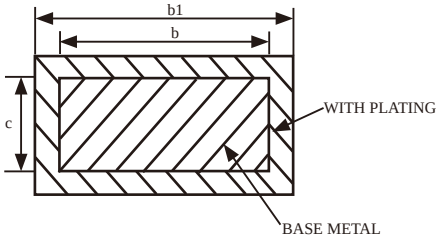

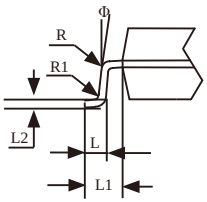

COMMON DIMENSIONS			
(UNITS OF MEASURE = MILLMETER /mm)			
SYMBOL	MIN	NOM	MAX
A	2.465	2.515	2.565
A1	0.100	0.150	0.200
A2	2.100	2.300	2.500
b	0.356	0.406	0.456
b1	0.366	0.426	0.486
c	-	0.254	-
D	20.88	20.98	21.08
E	10.100	10.300	10.500
E1	7.424	7.500	7.624
e	1.27		
L	0.700	0.800	0.900
L1	1.303	1.403	1.503
L2	-	0.274	-
R	-	0.200	-
R1	-	0.300	-
Φ	0^0	-	10^0
z	-	0.745	-

STC MCU Limited.

1.10.16 Dimension Drawings of QFN32

QFN32 OUTLINE PACKAGE

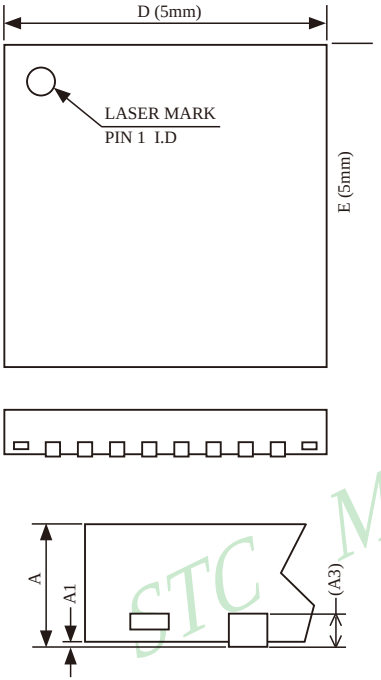

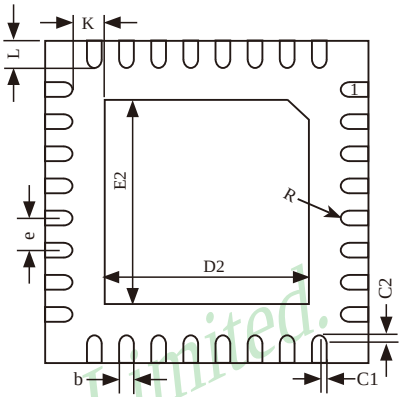

COMMON DIMENSIONS			
(UNITS OF MEASURE = MILLMETER /mm)			
SYMBOL	MIN.	NOM.	MAX.
A	0.70	0.75	0.80
A1	0	0.02	0.05
A3		0.20REF	
b	0.18	0.25	0.30
D	4.90	5.00	5.10
E	4.90	5.00	5.10
D2	3.10	3.20	3.30
E2	3.10	3.20	3.30
e	0.40	0.50	0.60
K	0.20	-	-
L	0.35	0.40	0.45
R	0.09	-	-
C1	-	0.08	-
C2	-	0.08	-

NOTES:
ALL DIMENSIONS REFER TO JEDEC STANDARD MO-220 WHHD-4

STC MCU Limited.

1.10.17 Dimension Drawings of PDIP40

PDIP40 OUTLINE PACKAGE

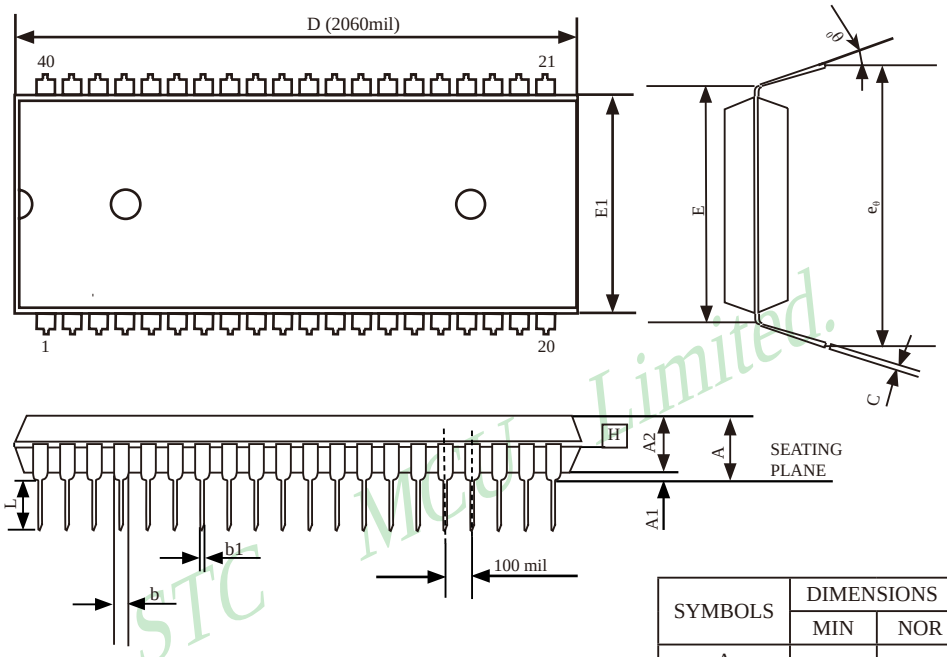

SYMBOLS	DIMENSIONS IN INCH		
	MIN	NOR	MAX
A	-	-	0.190
A1	0.015	-	0.020
A2	0.15	0.155	0.160
C	0.008	-	0.015
D	2.025	2.060	2.070
E	0.600 BSC		
E1	0.540	0.545	0.550
L	0.120	0.130	0.140
b1	0.015	-	0.021
b	0.045	-	0.067
e_θ	0.630	0.650	0.690
θ	0	7	15

UNIT: INCH 1 inch = 1000mil

STC MCU Limited.

1.10.18 Dimension Drawings of LQFP44

LQFP-44 OUTLINE PACKAGE

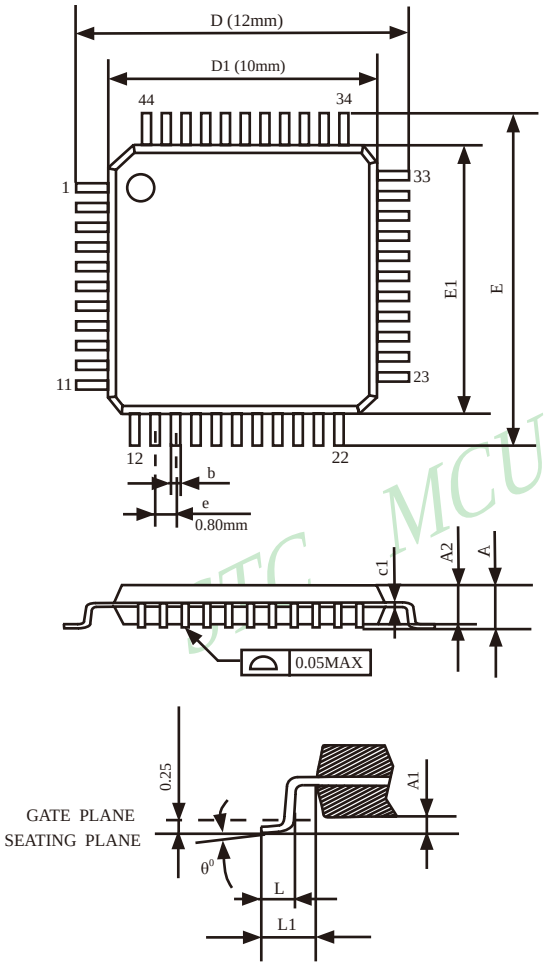

VARIATIONS (ALL DIMENSIONS SHOWN IN MM

SYMBOLS	MIN.	NOM	MAX.
A	-	-	1.60
A1	0.05	-	0.15
A2	1.35	1.40	1.45
c1	0.09	-	0.16
D		12.00	
D1		10.00	
E		12.00	
E1		10.00	
e		0.80	
1 b(w/o plating)	0.25	0.30	0.35
L	0.45	0.60	0.75
L1		1.00REF	
θ^0	0^0	3.5^0	7^0

STC MCU Limited.

1.10.19 Dimension Drawings of PLCC44

(PLCC44 is not producted now in STC15 series, LQFP44 is recommended)

PLCC44 OUTLINE PACKAGE

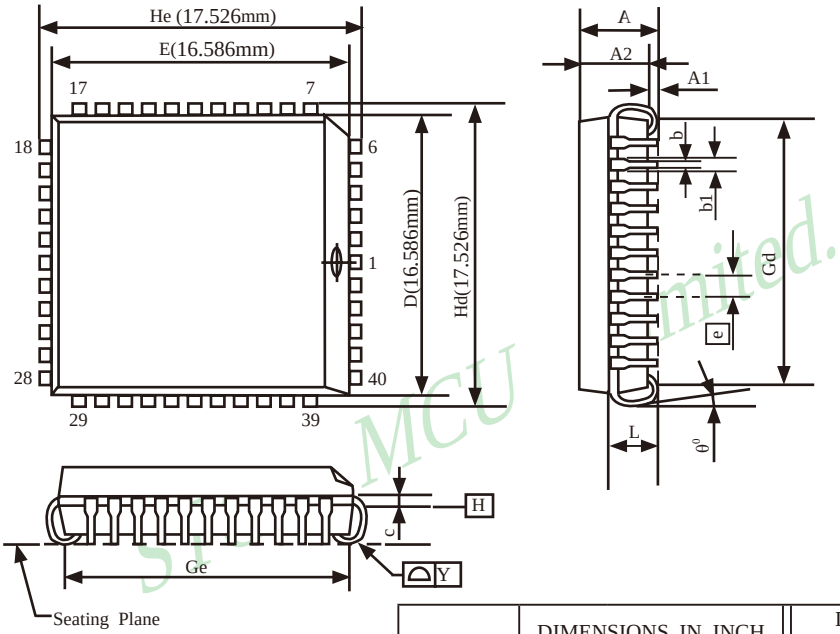

SYMBOLS	DIMENSIONS IN INCH			DIMENSIONS IN MILLMETERS		
	MIN	NOM	MAX	MIN	NOM	MAX
A	0.165	-	0.180	4.191	-	4.572
A1	0.020	-	-	0.508	-	-
A2	0.147	-	0.158	3.734	-	4.013
b1	0.026	0.028	0.032	0.660	0.711	0.813
b	0.013	0.017	0.021	0.330	0.432	0.533
c	0.007	0.010	0.0013	0.178	0.254	0.330
D	0.650	0.653	0.656	16.510	16.586	16.662
E	0.650	0.653	0.656	16.510	16.586	16.662
e	0.050BSC			1.270BSC		
Gd	0.590	0.610	0.630	14.986	15.494	16.002
Ge	0.590	0.610	0.630	14.986	15.494	16.002
Hd	0.685	0.690	0.695	17.399	17.526	17.653
He	0.685	0.690	0.695	17.399	17.526	17.653
L	0.100	-	0.112	2.540	-	2.845
Y	-	-	0.004	-	-	0.102

1 inch = 1000 mil

1.10.20 Dimension Drawings of PQFP44

(PQFP44 is not producted now in STC15 series, LQFP44 is recommended)

PQFP44 OUTLINE PACKAGE

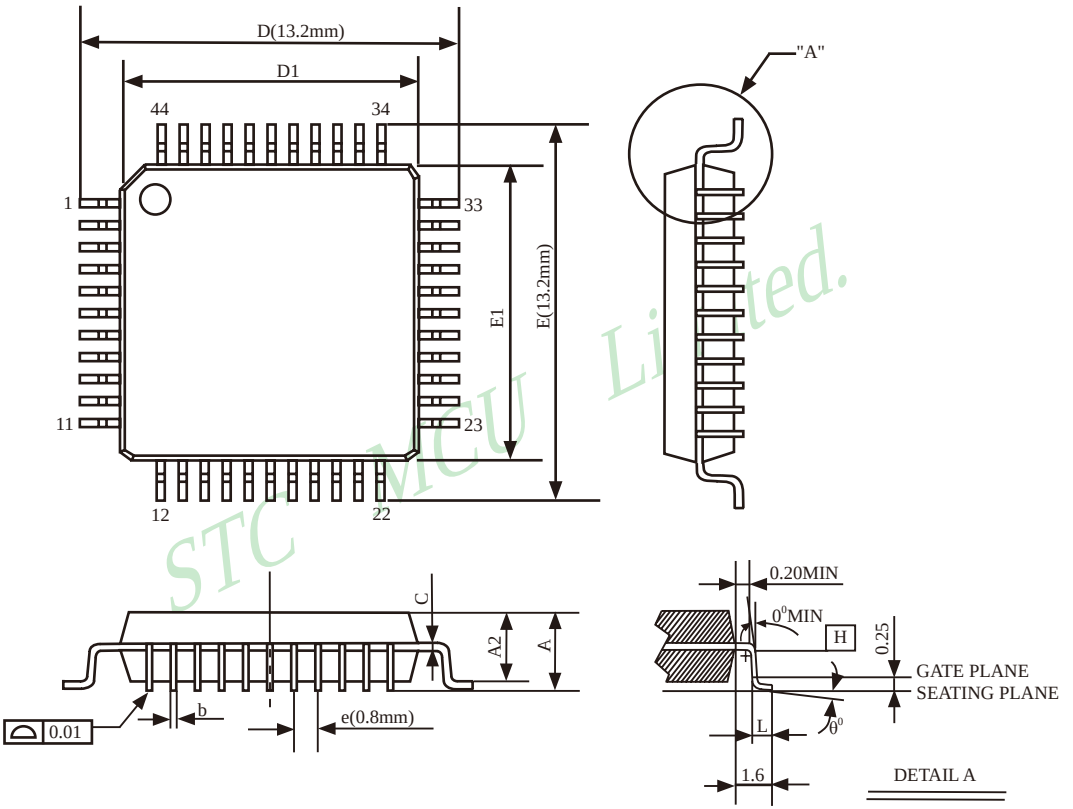

SYMBOLS	MIN.	NOM	MAX.
A	-	-	2.70
A1	0.25	-	0.50
A2	1.80	2.00	2.20
b(w/o plating)	0.25	0.30	0.35
D	13.00	13.20	13.40
D1	9.9	10.00	10.10
E	13.00	13.20	13.40
E1	9.9	10.00	10.10
L	0.73	0.88	0.93
e	0.80 BSC.		
θ°	0	-	7
C	0.1	0.15	0.2

UNIT:mm

NOTES:
1.JEDEC OUTLINE:M0-108 AA-1

2.DATUM PLANE H IS LOCATED AT THE BOTTOM OF THE MOLD PARTING LINE COINCIDENT WITH WHERE THE LAED EXITS THE BODY.

3.DIMENSIONS D1 AND E1 D0 NOT INCLUDE MOLD PROTRUSION. ALLOWABLE PROTRUSION IS 0.25mm PER SIDE. DIMENSIONS D1 AND E1 D0 INCLUDE MOLD MISMATCH AND ARE DETRMINED AT DATUM PLANE H.

4.DIMENSION b DOES NOT INCLUDE DAMBAR PROTRUSION.

STC MCU Limited.

1.10.21 Dimension Drawings of LQFP48

LQFP48 OUTLINE PACKAGE

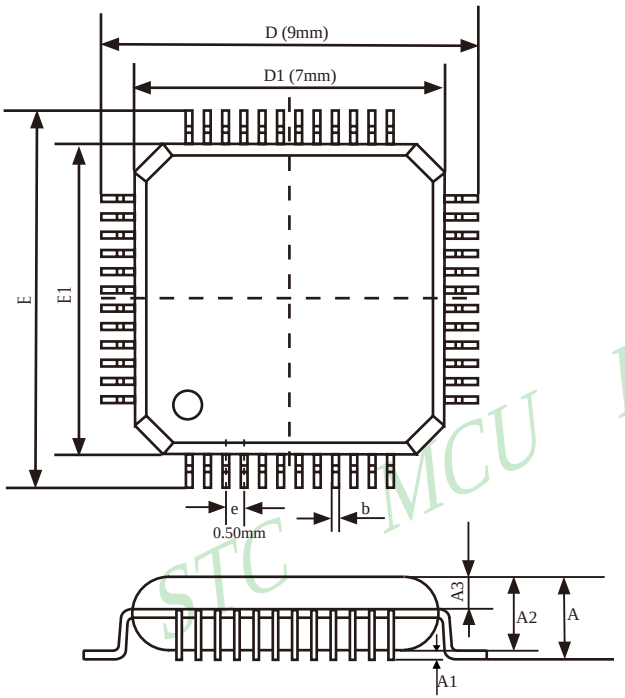

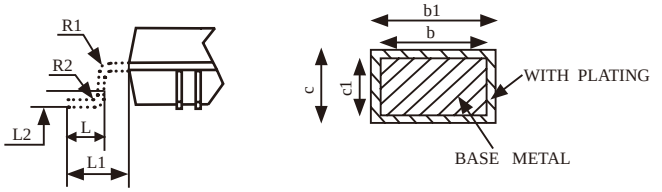

SYMBOL	MIN	NOM	MAX
A	-	-	1.60
A1	0.05	-	0.15
A2	1.35	1.40	1.45
A3	0.59	0.64	0.69
b	0.18	-	0.27
b1	0.17	0.20	0.23
c	0.13	-	0.18
c1	0.12	0.127	0.134
D	8.80	9.00	9.20
D1	6.90	7.00	7.10
E	8.80	9.00	9.20
E1	6.90	7.00	7.10
e	0.50		
L	0.45	0.60	0.75
L1	1.00REF		
L2	0.25		
R1	0.08	-	-
R2	0.08	-	0.20
S	0.20	-	-

VARIATIONS (ALL DIMENSIONS SHOWN IN MM

STC MCU Limited.

1.10.22 Dimension Drawings of QFN48

QFN48 OUTLINE PACKAGE

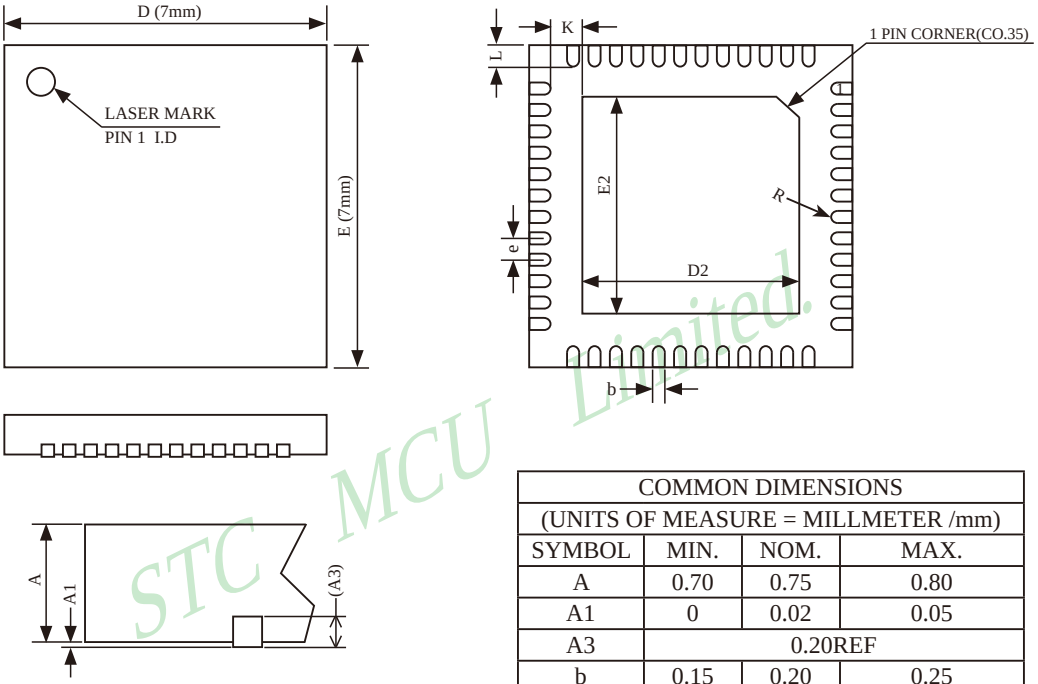

STC MCU Limited.

COMMON DIMENSIONS			
(UNITS OF MEASURE = MILLMETER /mm)			
SYMBOL	MIN.	NOM.	MAX.
A	0.70	0.75	0.80
A1	0	0.02	0.05
A3		0.20REF	
b	0.15	0.20	0.25
D	6.90	7.00	7.10
E	6.90	7.00	7.10
D2	3.95	4.05	4.15
E2	3.95	4.05	4.15
e	0.45	0.50	0.55
K	0.20	-	-
L	0.35	0.40	0.45
R	0.09	-	-

NOTES:
ALL DIMENSIONS REFER TO JEDEC STANDARD MO-220 WJJE.

1.10.23 Dimension Drawings of LQFP64S

LQFP64 SMALL OUTLINE PACKAGE (LQFP64S)

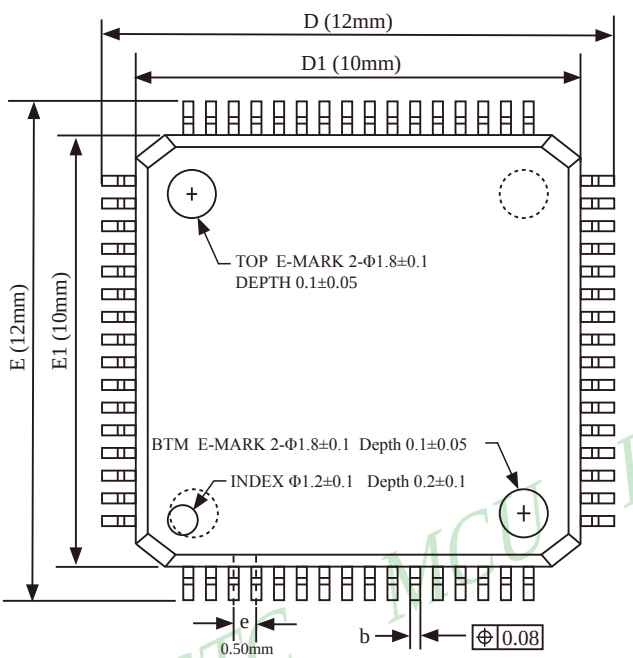

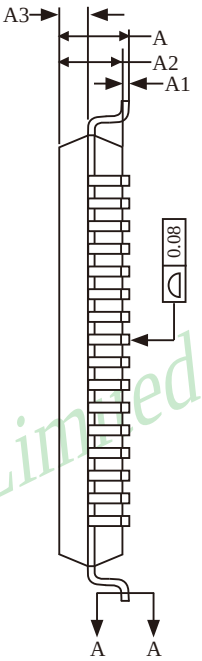

COMMON DIMENSIONS (UNITS OF MEASURE = MILLMETER / mm)			
SYMBOL	MIN	NOM	MAX
A	-	-	1.60
A1	0.05	-	0.15
A2	1.35	1.40	1.45
A3	0.59	0.64	0.69
b	0.18	-	0.27
b1	0.17	0.20	0.23
c	0.13	-	0.18
c1	0.12	0.127	0.134
D	11.80	12.00	12.20
D1	9.90	10.00	10.10
E	11.80	12.00	12.20
E1	9.90	10.00	10.10
e	0.50BSC		
L	0.45	0.60	0.75
L1	1.00REF		
L2	0.25BSC		
R1	0.08	-	-
R2	0.08	-	0.20
S	0.20	-	-
θ	0^0	3.5^0	7^0
θ1	0^0	-	-
θ2	11^0	12^0	13^0
θ3	11^0	12^0	13^0

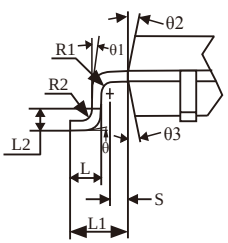

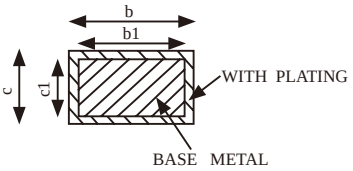

A-A Section View

NOTES:
ALL DIMENSIONS MEET JEDEC STANDARD MS-026 BEB DO NOT INCLUDE MOLD FLASH OR PROTRUSIONS.

STC MCU Limited.

1.10.24 Dimension Drawings of LQFP64L

LQFP64 LARGE OUTLINE PACKAGE (LQFP64L)

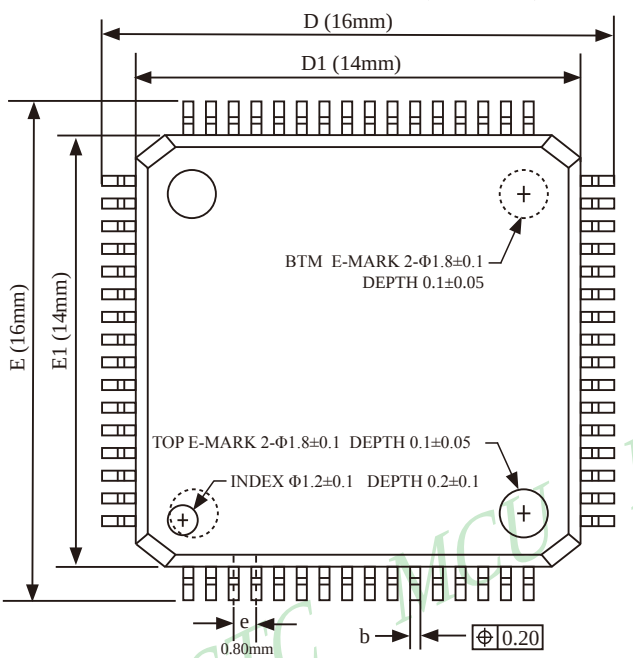

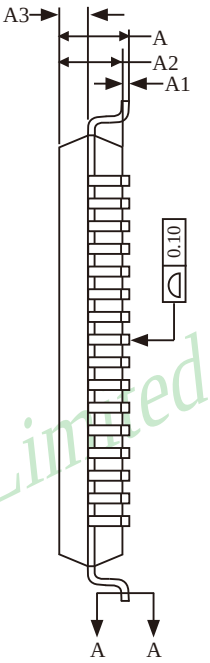

COMMON DIMENSIONS (UNITS OF MEASURE = MILLMETER / mm)			
SYMBOL	MIN	NOM	MAX
A	-	-	1.60
A1	0.05	-	0.15
A2	1.35	1.40	1.45
A3	0.59	0.64	0.69
b	0.31	-	0.44
b1	0.30	0.35	0.40
c	0.13	-	0.18
c1	0.12	0.127	0.134
D	15.80	16.00	16.20
D1	13.90	14.00	14.10
E	15.8	16.00	16.20
E1	13.90	14.00	14.10
e	0.70	0.80	0.90
L	0.45	0.60	0.75
L1	1.00REF		
L2	0.25BSC		
R1	0.08	-	-
R2	0.08	-	0.20
S	0.20	-	-
θ	0^0	3.5^0	7^0
θ1	0^0	-	-
θ2	11^0	12^0	13^0
θ3	11^0	12^0	13^0

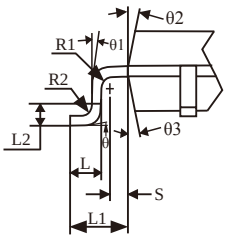

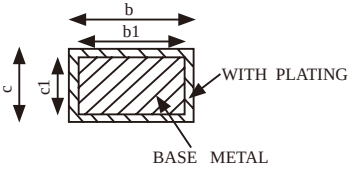

A-A Section View

NOTES:
ALL DIMENSIONS MEET JEDEC STANDARD MS-026 BEB DO NOT INCLUDE MOLD FLASH OR PROTRUSIONS.

STC MCU Limited.

1.10.25 Dimension Drawings of QFN64

QFN64 OUTLINE PACKAGE

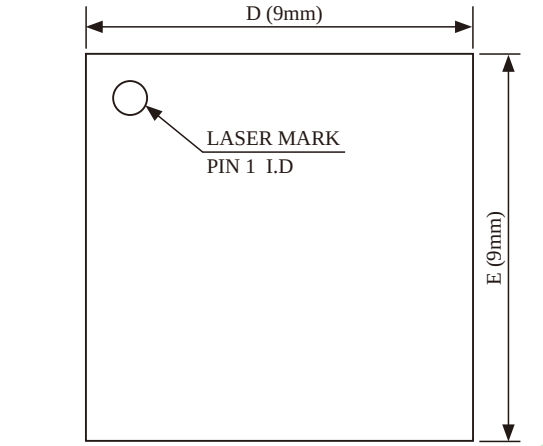

TOP VIEW

SIDE VIEW

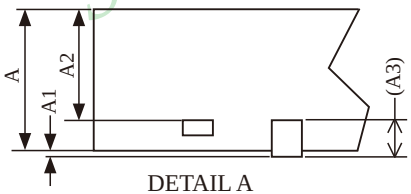

DETAIL A

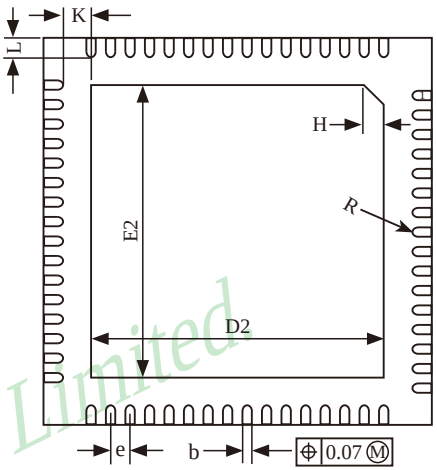

BOTTON VIEW

COMMON DIMENSIONS			
(UNITS OF MEASURE = MILLMETER / mm)			
SYMBOL	MIN.	NOM.	MAX.
A	0.80	0.85	0.90
A1	0	0.02	0.05
A2	0.60	0.65	0.70
A3		0.20REF	
b	0.15	0.20	0.25
D	8.90	9.00	9.10
E	8.90	9.00	9.10
D2	5.90	6.00	6.10
E2	5.90	6.00	6.10
e	0.45	0.50	0.55
H		0.35REF	
K	0.40	-	-
L	0.30	0.40	0.50
R	0.09	-	-

NOTES:
ALL DIMENSIONS DO NOT INCLUDE MOLD FLASH OR PROTRUSION

STC MCU Limited

1.11 Special Peripheral Function(CCP/SPI,UART1/2/3/4) Switch

CCP is abbreviation for Capture, Compare, PWM

Special Periphral function of STC154K60S2 series MCU, such as CCP/PWM、SPI、UART1、UART2、UART3、UART4 and so on, can be switched among serveral ports.

Mnemonic	Add	Name	7	6	5	4	3	2	1	0	Reset Value
AUXR1 P_SW1	A2H	Auxiliary register 1	S1_S1	S1_S0	CCP_S1	CCP_S0	SPI_S1	SPI_S0	0	DPS	0000 0000
P_SW2	BAH	Peripheral function switch			PWM67_S	PWM2345_S		S4_S	S3_S	S2_S	xxxx x000

CCP can be switched in 3 groups of pins by selecting the control bits CCP_S1 and CCP_S0.		
CCP_S1	CCP_S0	CCP can be switched in P1 and P2 and P3
0	0	CCP on [P1.2/ECI,P1.1/CCP0,P1.0/CCP1,P3.7/CCP2]
0	1	CCP on [P3.4/ECI_2,P3.5/CCP0_2,P3.6/CCP1_2,P3.7/CCP2_2]
1	0	CCP on [P2.4/ECI_3,P2.5/CCP0_3,P2.6/CCP1_3,P2.7/CCP2_3]
1	1	Invalid

PWM2/PWM3/PWM4/PWM5/PWMFLT can be switched in 2 groups of pins by selecting the control bit PWM2345_S.	
PWM2345_S	PWM2/PWM3/PWM4/PWM5/PWMFLT can be switched between P2, P3, and P4
0	PWM2/PWM3/PWM4/PWM5/PWMFLT on [P3.7/PWM2, P2.1/PWM3, P2.2/PWM4, P2.3/PWM5, P2.4/PWMFLT]
1	PWM2/PWM3/PWM4/PWM5/PWMFLT on [P2.7/PWM2_2, P4.5/PWM3_2, P4.4/ PWM4_2, P4.2/PWM5_2, P0.5/PWMFLT_2]

PWM6/PWM7 can be switched in 2 groups of pins by selecting the control bit PWM67_S.	
PWM67_S	PWM2/PWM3/PWM4/PWM5/PWMFLT can be switched between P0 and P1
0	PWM6/PWM7 on [P1.6/PWM6,P1.7/PWM7]
1	PWM6/PWM7 on [P0.7/PWM6_2,P0.6/PWM7_2]

SPI can be switched in 3 groups of pins by selecting the control bits SPI_S1 and SPI_S0		
SPI_S1	SPI_S0	SPI can be switched in P1 and P2 and P4
0	0	SPI on [P1.2/SS,P1.3/MOSI,P1.4/MISO,P1.5/SCLK]
0	1	SPI on [P2.4/SS_2,P2.3/MOSI_2,P2.2/MISO_2,P2.1/SCLK_2]
1	0	SPI on [P5.4/SS_3,P4.0/MOSI_3,P4.1/MISO_3,P4.3/SCLK_3]
1	1	Invalid

STC MCU Limited.

Mnemonic	Add	Name	7	6	5	4	3	2	1	0	Reset Value
AUXR1 P_SW1	A2H	Auxiliary register 1	S1_S1	S1_S0	CCP_S1	CCP_S0	SPI_S1	SPI_S0	0	DPS	0000 0000
P_SW2	BAH	Peripheral function switch			PWM67_S	PWM2345_S		S4_S	S3_S	S2_S	xxxx x000

UART1/S1 can be switched in 3 groups of pins by selecting the control bits S1_S0 and S1_S1.		
S1_S1	S1_S0	UART1/S1 can be switched between P1 and P3
0	0	UART1/S1 on [P3.0/RxD,P3.1/TxD]
0	1	UART1/S1 on [P3.6/RxD_2,P3.7/TxD_2]
1	0	UART1/S1 on [P1.6/RxD_3/XTAL2,P1.7/TxD_3/XTAL1] when UART1 is on P1, please using internal R/C clock.
1	1	Invalid

Recommed UART1 on [P3.6/RxD_2,P3.7/TxD_2] or [P1.6/RxD_3/XTAL2,P1.7/TxD_3/XTAL1].

UART2/S2 can be switched in 2 groups of pins by selecting the control bit S2_S.	
S2_S	UART2/S2 can be switched between P1 and P4
0	UART2/S2 on [P1.0/RxD2,P1.1/TxD2]
1	UART2/S2 on [P4.6/RxD2_2,P4.7/TxD2_2]

UART3/S3 can be switched in 2 groups of pins by selecting the control bit S3_S.	
S3_S	UART3/S3 can be switched between P0 and P5
0	UART3/S3 on [P0.0/RxD3,P0.1/TxD3]
1	UART3/S3 on [P5.0/RxD3_2,P5.1/TxD3_2]

UART4/S4 can be switched in 2 groups of pins by selecting the control bit S4_S.	
S4_S	UART4/S4 can be switched between P0 and P5
0	UART4/S4 on [P0.2/RxD4,P0.3/TxD4]
1	UART4/S4 on [P5.2/RxD4_2,P5.3/TxD4_2]

DPS : DPTR registers select bit.

0 : DPTR0 is selected

1 : DPTR1 is selected

STC MCU Limited.

1.11.1 Test Porgram that Switch CCP/PWM/PCA (C and ASM)

CCP is abbreviation for Capture, Compare and PWM.

1.C Program Listing

```
/*---------------------------------------------------------------------------------------------------*/
/* --- STC MCU  Limited. ---------------------------------------------------------------------------*/
/* --- Exam Program that switch STC15W4K32S4  series CCP/PCA/PWM in serveral ports--*/
/* --- Mobile: (86)13922805190 ---------------------------------------------------------------------*/
/* --- Fax: 86-755-82905966 ------------------------------------------------------------------------*/
/* --- Tel: 86-755-82948412 ------------------------------------------------------------------------*/
/* --- Web: www.STCMCU.com -------------------------------------------------------------------------*/
/* If you want to use the program or the program referenced in the  ----------------------------*/
/* article, please specify in which data and procedures from STC    ----------------------------*/
/*---- In Keil C development environment, select the Intel 8052 to compiling ----------------*/
/*----  And only contain < reg51.h > as header file ------------------------------------------*/
/*---------------------------------------------------------------------------------------------------*/

//suppose the frequency of test chip is 18.432MHz

#include "reg51.h"

#define   FOSC    18432000L

//-----------------------------------------

sfr       P_SW1   =   0xA2;             //Peripheral function switch register

#define   CCP_S0  0x10                  //P_SW1.4
#define   CCP_S1  0x20                  //P_SW1.5

//-----------------------------------------
void main()
{
          ACC     =     P_SW1;
          ACC     &=    ~(CCP_S0 | CCP_S1);     //CCP_S0=0 CCP_S1=0
          P_SW1   =     ACC;                    //(P1.2/ECI, P1.1/CCP0, P1.0/CCP1, P3.7/CCP2)

//        ACC     =     P_SW1;
//        ACC     &=    ~(CCP_S0 | CCP_S1);     //CCP_S0=1 CCP_S1=0
//        ACC     |=    CCP_S0;           //(P3.4/ECI_2, P3.5/CCP0_2, P3.6/CCP1_2, P3.7/CCP2_2)
//        P_SW1   =     ACC;
//
//        ACC     =     P_SW1;
//        ACC     &=    ~(CCP_S0 | CCP_S1);     //CCP_S0=0 CCP_S1=1
//        ACC     |=    CCP_S1;           //(P2.4/ECI_3, P2.5/CCP0_3, P2.6/CCP1_3, P2.7/CCP2_3)
//        P_SW1   =     ACC;
          while (1);                            //program end
}
```

STC MCU Limited.

2. Assembler Listing

```
/*---------------------------------------------------------------------------------------------------------*/
/* --- STC MCU  Limited. ---------------------------------------------------------------------------------*/
/* --- Exam Program that switch STC15W4K32S4  series CCP/PCA/PWM in serveral ports--*/
/* --- Mobile: (86)13922805190 ---------------------------------------------------------------------------*/
/* --- Fax: 86-755-82905966 ------------------------------------------------------------------------------*/
/* --- Tel: 86-755-82948412 ------------------------------------------------------------------------------*/
/* --- Web: www.STCMCU.com -------------------------------------------------------------------------------*/
/* If you want to use the program or the program referenced in the  ----------------------------*/
/* article, please specify in which data and procedures from STC    ----------------------------*/
/*---- In Keil C development environment, select the Intel 8052 to compiling ------------------*/
/*----  And only contain < reg51.h > as header file ------------------------------------------------*/
/*---------------------------------------------------------------------------------------------------------*/
//suppose the frequency of test chip is 18.432MHz

#define   FOSC    18432000L

//-----------------------------------------
P_SW1   EQU     0A2H                    //Peripheral function switch register

CCP_S0  EQU     10H                     //P_SW1.4
CCP_S1  EQU     20H                     //P_SW1.5

//-----------------------------------------
        ORG     0000H
        LJMP    MAIN
//-----------------------------------------

        ORG     0100H

MAIN:
        MOV     SP,     #3FH

        MOV     A,      P_SW1
        ANL     A,      #0CFH           //CCP_S0=0 CCP_S1=0
        MOV     P_SW1,  A               //(P1.2/ECI, P1.1/CCP0, P1.0/CCP1, P3.7/CCP2)

//      MOV     A,      P_SW1
//      ANL     A,      #0CFH           //CCP_S0=1 CCP_S1=0
//      ORL     A,      #CCP_S0         //(P3.4/ECI_2, P3.5/CCP0_2, P3.6/CCP1_2, P3.7/CCP2_2)
//      MOV     P_SW1,  A
//
//      MOV     A,      P_SW1
//      ANL     A,      #0CFH           //CCP_S0=0 CCP_S1=1
//      ORL     A,      #CCP_S1         //(P2.4/ECI_3, P2.5/CCP0_3, P2.6/CCP1_3, P2.7/CCP2_3)
//      MOV     P_SW1,  A
        SJMP    $                       //program end

        END
```

STC MCU Limited.

1.11.2 Test Porgram that Switch PWM2/3/4/5/PWMFLT (C and ASM)

1.C Program Listing

```
/*---------------------- PWM(Pulse Width Modulation) ----------------------------------------------*/
/*-------------------------------------------------------------------------------------------------*/
/* --- STC MCU Limited. ----------------------------------------------------------------------------*/
/* --- Exam Program that switch STC15W4K32S4 series PWM2/3/4/5/PWMFLT in serveral ports--*/
/* --- Mobile: (86)13922805190 ---------------------------------------------------------------------*/
/* --- Fax: 86-755-82905966 ------------------------------------------------------------------------*/
/* --- Tel: 86-755-82948412 ------------------------------------------------------------------------*/
/* --- Web: www.STCMCU.com -------------------------------------------------------------------------*/
/* If you want to use the program or the program referenced in the ----------------------------------*/
/* article, please specify in which data and procedures from STC ------------------------------------*/
/*---- In Keil C development environment, select the Intel 8052 to compiling ----------------------*/
/*---- And only contain < reg51.h > as header file -------------------------------------------------*/
/*-------------------------------------------------------------------------------------------------*/

//suppose the frequency of test chip is 18.432MHz

#include "reg51.h"

#define   FOSC    18432000L

//-----------------------------------------

sfr       P_SW2   =   0xBA;              //Peripheral function switch register 2

#define   PWM2345_S     0x10            //P_SW2.4


//-----------------------------------------

void main()
{
          P_SW2   &=    ~PWM2345_S;     //PWM2345_S=0 ( P3.7/PWM2, P2.1/PWM3,
                                        //P2.2/PWM4, P2.3/PWM5, P2.4/PWMFLT )

//        P_SW2   |=    PWM2345_S;      //PWM2345_S=1 (P2.7/PWM2_2,  P4.5/PWM3_2,
                                        //P4.4/PWM4_2, P4.2/PWM5_2, P0.5/PWMFLT_2)

          while (1);                    //program end
}
```

STC MCU Limited.

2. Assembler Listing

```
/*-----------------------  PWM(Pulse Width Modulation) ------------------------------------------------------*/
/*---------------------------------------------------------------------------------------------------------*/
/* --- STC MCU  Limited. ---------------------------------------------------------------------------------*/
/* --- Exam Program that switch STC15W4K32S4  series PWM2/3/4/5/PWMFLT in serveral ports--*/
/* --- Mobile: (86)13922805190 ---------------------------------------------------------------------------*/
/* --- Fax: 86-755-82905966 ------------------------------------------------------------------------------*/
/* --- Tel: 86-755-82948412 ------------------------------------------------------------------------------*/
/* --- Web: www.STCMCU.com -------------------------------------------------------------------------------*/
/* If you want to use the program or the program referenced in the  ----------------------------------------*/
/* article, please specify in which data and procedures from STC    ----------------------------------------*/
/*---- In Keil C development environment, select the Intel 8052 to compiling ----------------------------*/
/*----  And only contain < reg51.h > as header file ------------------------------------------------------*/
/*---------------------------------------------------------------------------------------------------------*/

//suppose the frequency of test chip is 18.432MHz

#define   FOSC    18432000L

//-----------------------------------------

P_SW2           EQU     0BAH            //Peripheral function switch register 2

PWM2345_S       EQU     10H             //P_SW2.4

//-----------------------------------------

        ORG     0000H
        LJMP    MAIN                    //Reset entrance
//-----------------------------------------

        ORG     0100H

MAIN:
        MOV     SP,     #3FH

        ANL     P_SW2,  #NOT    PWM2345_S       //PWM2345_S=0 ( P3.7/PWM2, P2.1/PWM3,
                                                //P2.2/PWM4, P2.3/PWM5, P2.4/PWMFLT )

//      ORL     P_SW2,  #PWM2345_S              //PWM2345_S=1 (P2.7/PWM2_2,  P4.5/PWM3_2,
                                                //P4.4/PWM4_2, P4.2/PWM5_2, P0.5/PWMFLT_2)

        SJMP    $                       //program end

        END
```

STC MCU Limited.

1.11.3 Test Porgram that Switch PWM6/PWM7 (C and ASM)

1.C Program Listing

```
/*---------------------  PWM(Pulse Width Modulation) ----------------------------------------------*/
/*-------------------------------------------------------------------------------------------------*/
/* --- STC MCU  Limited. ---------------------------------------------------------------------------*/
/* --- Exam Program that switch STC15W4K32S4  series PWM6/PWM7 in serveral ports-------------*/
/* --- Mobile: (86)13922805190 ---------------------------------------------------------------------*/
/* --- Fax: 86-755-82905966 ------------------------------------------------------------------------*/
/* --- Tel: 86-755-82948412 ------------------------------------------------------------------------*/
/* --- Web: www.STCMCU.com -------------------------------------------------------------------------*/
/* If you want to use the program or the program referenced in the  ----------------------------------*/
/* article, please specify in which data and procedures from STC    ----------------------------------*/
/*---- In Keil C development environment, select the Intel 8052 to compiling ----------------------*/
/*----  And only contain < reg51.h > as header file ------------------------------------------------*/
/*-------------------------------------------------------------------------------------------------*/

//suppose the frequency of test chip is 18.432MHz

#include "reg51.h"

#define    FOSC     18432000L

//-----------------------------------------

sfr        P_SW2    =     0xBA;              //Peripheral function switch register 2

#define    PWM67_S          0x20             //P_SW2.5


//-----------------------------------------

void main()
{
           P_SW2    &=        ~PWM67_S;      //PWM67_S=0 ( P1.6/PWM6, P1.7/PWM7 )

//         P_SW2    |=        PWM67_S;       //PWM67_S=1 ( P0.7/PWM6_2, P0.6/PWM7_2 )

           while (1);                        //program end
}
```

STC MCU Limited.

2. Assembler Listing

```
/*-----------------------  PWM(Pulse Width Modulation) ------------------------------------------------*/
/*---------------------------------------------------------------------------------------------------*/
/* --- STC MCU  Limited. ---------------------------------------------------------------------------*/
/* --- Exam Program that switch STC15W4K32S4  series PWM6/PWM7 in serveral ports-------------*/
/* --- Mobile: (86)13922805190 ---------------------------------------------------------------------*/
/* --- Fax: 86-755-82905966 ------------------------------------------------------------------------*/
/* --- Tel: 86-755-82948412 ------------------------------------------------------------------------*/
/* --- Web: www.STCMCU.com -------------------------------------------------------------------------*/
/* If you want to use the program or the program referenced in the  ----------------------------------*/
/* article, please specify in which data and procedures from STC    ----------------------------------*/
/*---- In Keil C development environment, select the Intel 8052 to compiling ----------------------*/
/*----  And only contain < reg51.h > as header file ------------------------------------------------*/
/*---------------------------------------------------------------------------------------------------*/

//suppose the frequency of test chip is 18.432MHz

#define   FOSC    18432000L

//-----------------------------------------

P_SW2           EQU     0BAH            //Peripheral function switch register 2

PWM67_S         EQU     20H             //P_SW2.5

//-----------------------------------------

        ORG     0000H
        LJMP    MAIN                    //Reset entrance

//-----------------------------------------

        ORG     0100H

MAIN:
        MOV     SP,     #3FH

        ANL     P_SW2,  #NOT    PWM67_S     //PWM67_S=0 ( P1.6/PWM6, P1.7/PWM7 )

//      ORL     P_SW2,  #PWM67_S            //PWM67_S=1 ( P0.7/PWM6_2, P0.6/PWM7_2 )

        SJMP    $                       //program end

        END
```

STC MCU Limited.

1.11.4 Test Porgram that Switch SPI (C and ASM)

1.C Program Listing

```
/*---------------------------------------------------------------------------------------------------*/
/* --- STC MCU  Limited. ---------------------------------------------------------------------------*/
/* --- Exam Program that switch STC15W4K32S4  series SPI in serveral ports ----------------*/
/* --- Mobile: (86)13922805190 ---------------------------------------------------------------------*/
/* --- Fax: 86-755-82905966 ------------------------------------------------------------------------*/
/* --- Tel: 86-755-82948412 ------------------------------------------------------------------------*/
/* --- Web: www.STCMCU.com -------------------------------------------------------------------------*/
/* If you want to use the program or the program referenced in the  ----------------------------*/
/* article, please specify in which data and procedures from STC    ----------------------------*/
/*---- In Keil C development environment, select the Intel 8052 to compiling ------------------*/
/*----  And only contain < reg51.h > as header file ---------------------------------------------*/
/*---------------------------------------------------------------------------------------------------*/
//suppose the frequency of test chip is 18.432MHz

#include "reg51.h"

#define FOSC 18432000L

//-----------------------------------------

sfr     P_SW1   =   0xA2;                   //Peripheral function switch register

#define SPI_S0  0x04                        //P_SW1.2
#define SPI_S1  0x08                        //P_SW1.3

//-----------------------------------------

void main()
{
        ACC     =   P_SW1;
        ACC     &=  ~(SPI_S0 | SPI_S1);     //SPI_S0=0 SPI_S1=0
        P_SW1   =   ACC;                    //(P1.2/SS, P1.3/MOSI, P1.4/MISO, P1.5/SCLK)

//      ACC     =   P_SW1;
//      ACC     &=  ~(SPI_S0 | SPI_S1);     //SPI_S0=1 SPI_S1=0
//      ACC     |=  SPI_S0;          //(P2.4/SS_2, P2.3/MOSI_2, P2.2/MISO_2, P2.1/SCLK_2)
//      P_SW1   =   ACC;
//
//      ACC     =   P_SW1;
//      ACC     &=  ~(SPI_S0 | SPI_S1);     //SPI_S0=0 SPI_S1=1
//      ACC     |=  SPI_S1;          //(P5.4/SS_3, P4.0/MOSI_3, P4.1/MISO_3, P4.3/SCLK_3)
//      P_SW1   =   ACC;

        while (1);                          //program end
}
```

STC MCU Limited.

2. Assembler Listing

```
/*---------------------------------------------------------------------------------------------------*/
/* --- STC MCU  Limited. ---------------------------------------------------------------------------*/
/* --- Exam Program that switch STC15W4K32S4  series SPI in serveral ports ----------------*/
/* --- Mobile: (86)13922805190 ---------------------------------------------------------------------*/
/* --- Fax: 86-755-82905966 ------------------------------------------------------------------------*/
/* --- Tel: 86-755-82948412 ------------------------------------------------------------------------*/
/* --- Web: www.STCMCU.com -------------------------------------------------------------------------*/
/* If you want to use the program or the program referenced in the  ----------------------------*/
/* article, please specify in which data and procedures from STC    ----------------------------*/
/*---- In Keil C development environment, select the Intel 8052 to compiling ------------------*/
/*----  And only contain < reg51.h > as header file ---------------------------------------------*/
/*---------------------------------------------------------------------------------------------------*/

//suppose the frequency of test chip is 18.432MHz

#define   FOSC    18432000L

//-----------------------------------------

P_SW1   EQU     0A2H                    //Peripheral function switch register
SPI_S0  EQU     04H                     //P_SW1.2
SPI_S1  EQU     08H                     //P_SW1.3

//-----------------------------------------

        ORG     0000H
        LJMP    MAIN
//-----------------------------------------

        ORG     0100H

MAIN:
        MOV     SP,     #3FH

        MOV     A,      P_SW1
        ANL     A,      #0F3H           //SPI_S0=0 SPI_S1=0
        MOV     P_SW1,  A               //(P1.2/SS, P1.3/MOSI, P1.4/MISO, P1.5/SCLK)

//      MOV     A,      P_SW1
//      ANL     A,      #0F3H           //SPI_S0=1 SPI_S1=0
//      ORL     A,      #SPI_S0         //(P2.4/SS_2, P2.3/MOSI_2, P2.2/MISO_2, P2.1/SCLK_2)
//      MOV     P_SW1,  A
//
//      MOV     A,      P_SW1
//      ANL     A,      #0F3H           //SPI_S0=0 SPI_S1=1
//      ORL     A,      #SPI_S1         //(P5.4/SS_3, P4.0/MOSI_3, P4.1/MISO_3, P4.3/SCLK_3)
//      MOV     P_SW1,  A

        SJMP    $                       //program end

        END
```

STC MCU Limited.

1.11.5 Test Porgram that Switch UART1 (C and ASM)

1.C Program Listing

```
/*---------------------------------------------------------------------------------------------------*/
/* --- STC MCU  Limited. ---------------------------------------------------------------------------*/
/* --- Exam Program that switch STC15W4K32S4  series UART1 in serveral ports -----------*/
/* --- Mobile: (86)13922805190 ---------------------------------------------------------------------*/
/* --- Fax: 86-755-82905966 ------------------------------------------------------------------------*/
/* --- Tel: 86-755-82948412 ------------------------------------------------------------------------*/
/* --- Web: www.STCMCU.com -------------------------------------------------------------------------*/
/* If you want to use the program or the program referenced in the  ----------------------------*/
/* article, please specify in which data and procedures from STC    ----------------------------*/
/*---- In Keil C development environment, select the Intel 8052 to compiling ------------------*/
/*----  And only contain < reg51.h > as header file ---------------------------------------------*/
/*---------------------------------------------------------------------------------------------------*/
//suppose the frequency of test chip is 18.432MHz

#include "reg51.h"

#define FOSC 18432000L

//-----------------------------------------

sfr     P_SW1   =   0xA2;               //Peripheral function switch register
#define S1_S0   0x40                    //P_SW1.6
#define S1_S1   0x80                    //P_SW1.7

//-----------------------------------------

void main()
{
        ACC     =       P_SW1;
        ACC     &=      ~(S1_S0 | S1_S1);       //S1_S0=0 S1_S1=0
        P_SW1   =       ACC;                    //(P3.0/RxD, P3.1/TxD)

//      ACC     =       P_SW1;
//      ACC     &=      ~(S1_S0 | S1_S1);       //S1_S0=1 S1_S1=0
//      ACC     |=      S1_S0;                  //(P3.6/RxD_2, P3.7/TxD_2)
//      P_SW1   =       ACC;
//
//      ACC     =       P_SW1;
//      ACC     &=      ~(S1_S0 | S1_S1);       //S1_S0=0 S1_S1=1
//      ACC     |=      S1_S1;                  //(P1.6/RxD_3, P1.7/TxD_3)
//      P_SW1   =       ACC;

        while (1);                              //program end
}
```

STC MCU Limited.

2. Assembler Listing

```
/*---------------------------------------------------------------------------------------------------*/
/* --- STC MCU  Limited. ---------------------------------------------------------------------------*/
/* --- Exam Program that switch STC15W4K32S4  series UART1 in serveral ports -----------*/
/* --- Mobile: (86)13922805190 ---------------------------------------------------------------------*/
/* --- Fax: 86-755-82905966 ------------------------------------------------------------------------*/
/* --- Tel: 86-755-82948412 ------------------------------------------------------------------------*/
/* --- Web: www.STCMCU.com -------------------------------------------------------------------------*/
/* If you want to use the program or the program referenced in the  ----------------------------*/
/* article, please specify in which data and procedures from STC    ----------------------------*/
/*---- In Keil C development environment, select the Intel 8052 to compiling ------------------*/
/*----  And only contain < reg51.h > as header file ---------------------------------------------*/
/*---------------------------------------------------------------------------------------------------*/
//suppose the frequency of test chip is 18.432MHz

#define FOSC 18432000L

//-----------------------------------------
P_SW1   EQU     0A2H                            //Peripheral function switch register

S1_S0   EQU     40H             //P_SW1.6
S1_S1   EQU     80H             //P_SW1.7

//-----------------------------------------
        ORG     0000H
        LJMP    MAIN

//-----------------------------------------

        ORG     0100H

MAIN:
        MOV     SP,     #3FH

        MOV     A,      P_SW1
        ANL     A,      #03FH                   //S1_S0=0 S1_S1=0
        MOV     P_SW1,  A                       //(P3.0/RxD, P3.1/TxD)

//      MOV     A,      P_SW1
//      ANL     A,      #03FH                   //S1_S0=1 S1_S1=0
//      ORL     A,      #S1_S0                  //(P3.6/RxD_2, P3.7/TxD_2)
//      MOV     P_SW1,  A
//
//      MOV      A,     P_SW1
//      ANL     A,      #03FH                   //S1_S0=0 S1_S1=1
//      ORL     A,      #S1_S1                  //(P1.6/RxD_3, P1.7/TxD_3)
//      MOV     P_SW1,  A

        SJMP    $                               //program end

        END
```

STC MCU Limited.

1.11.6 Test Porgram that Switch UART2 (C and ASM)

1.C Program Listing

```
/*---------------------------------------------------------------------------------------------------*/
/* --- STC MCU  Limited. ---------------------------------------------------------------------------*/
/* --- Exam Program that switch STC15W4K32S4  series UART2 in serveral ports ------------*/
/* --- Mobile: (86)13922805190 ---------------------------------------------------------------------*/
/* --- Fax: 86-755-82905966 ------------------------------------------------------------------------*/
/* --- Tel: 86-755-82948412 ------------------------------------------------------------------------*/
/* --- Web: www.STCMCU.com -------------------------------------------------------------------------*/
/* If you want to use the program or the program referenced in the  ------------------------------*/
/* article, please specify in which data and procedures from STC    ------------------------------*/
/*---- In Keil C development environment, select the Intel 8052 to compiling ------------------*/
/*----  And only contain < reg51.h > as header file ---------------------------------------------*/
/*---------------------------------------------------------------------------------------------------*/

//suppose the frequency of test chip is 18.432MHz

#include "reg51.h"

#define FOSC 18432000L

//---------------------------------------

sfr     P_SW2   =   0xBA;                   //Peripheral function switch register
#define S2_S    0x01                        //P_SW2.0

//---------------------------------------

void main()
{
        P_SW2   &=      ~S2_S;              //S2_S0=0 (P1.0/RxD2, P1.1/TxD2)

//      P_SW2   |=      S2_S;       `       //S2_S0=1 (P4.6/RxD2_2, P4.7/TxD2_2)

        while (1);                          //program end
}
```

STC MCU Limited.

2. Assembler Listing

```
/*---------------------------------------------------------------------------------------------------*/
/* --- STC MCU  Limited. ---------------------------------------------------------------------------*/
/* --- Exam Program that switch STC15W4K32S4  series UART2 in serveral ports ------------*/
/* --- Mobile: (86)13922805190 ---------------------------------------------------------------------*/
/* --- Fax: 86-755-82905966 ------------------------------------------------------------------------*/
/* --- Tel: 86-755-82948412 ------------------------------------------------------------------------*/
/* --- Web: www.STCMCU.com -------------------------------------------------------------------------*/
/* If you want to use the program or the program referenced in the  ----------------------------*/
/* article, please specify in which data and procedures from STC    ----------------------------*/
/*---- In Keil C development environment, select the Intel 8052 to compiling ------------------*/
/*----  And only contain < reg51.h > as header file ------------------------------------------------*/
/*---------------------------------------------------------------------------------------------------*/
//suppose the frequency of test chip is 18.432MHz

#define   FOSC    18432000L

//-----------------------------------------

P_SW2   EQU     0BAH                    //Peripheral function switch register

S2_S    EQU     01H                     //P_SW2.0

//-----------------------------------------

        ORG     0000H
        LJMP    MAIN

//-----------------------------------------

        ORG     0100H

MAIN:
        MOV     SP,     #3FH

        ANL     P_SW2,  #NOT S2_S       //S2_S0=0 (P1.0/RxD2, P1.1/TxD2)

//      ORL     P_SW2,  #S2_S           //S2_S0=1 (P4.6/RxD2_2, P4.7/TxD2_2)

        SJMP    $                       //program end

        END
```

STC MCU Limited.

1.11.7 Test Porgram that Switch UART3 (C and ASM)

1.C Program Listing

```
/*-------------------------------------------------------------------------------------------------*/
/* --- STC MCU  Limited. ---------------------------------------------------------------------------*/
/* --- Exam Program that switch STC15W4K32S4  series UART3 in serveral ports ------------*/
/* --- Mobile: (86)13922805190 ---------------------------------------------------------------------*/
/* --- Fax: 86-755-82905966 ------------------------------------------------------------------------*/
/* --- Tel: 86-755-82948412 ------------------------------------------------------------------------*/
/* --- Web: www.STCMCU.com -------------------------------------------------------------------------*/
/* If you want to use the program or the program referenced in the  ----------------------------*/
/* article, please specify in which data and procedures from STC    ----------------------------*/
/*---- In Keil C development environment, select the Intel 8052 to compiling ------------------*/
/*----  And only contain < reg51.h > as header file ---------------------------------------------*/
/*-------------------------------------------------------------------------------------------------*/

//suppose the frequency of test chip is 18.432MHz

#include "reg51.h"

#define   FOSC    18432000L

//-----------------------------------------

sfr       P_SW2   =       0xBA;           //Peripheral function switch register

#define   S3_S            0x02            //P_SW2.1

//-----------------------------------------

void main()
{
          P_SW2   &=      ~S3_S;          //S3_S0=0 (P0.0/RxD3, P0.1/TxD3)

//        P_SW2   |=      S3_S;           //S3_S0=1 (P5.0/RxD3_2, P5.1/TxD3_2)

          while (1);                      //program end
}
```

STC MCU Limited.

2. Assembler Listing

```
/*---------------------------------------------------------------------------------------------------*/
/* --- STC MCU  Limited. ---------------------------------------------------------------------------*/
/* --- Exam Program that switch STC15W4K32S4  series UART3 in serveral ports ------------*/
/* --- Mobile: (86)13922805190 ---------------------------------------------------------------------*/
/* --- Fax: 86-755-82905966 ------------------------------------------------------------------------*/
/* --- Tel: 86-755-82948412 ------------------------------------------------------------------------*/
/* --- Web: www.STCMCU.com -------------------------------------------------------------------------*/
/* If you want to use the program or the program referenced in the  ----------------------------*/
/* article, please specify in which data and procedures from STC    ----------------------------*/
/*---- In Keil C development environment, select the Intel 8052 to compiling ------------------*/
/*----  And only contain < reg51.h > as header file ------------------------------------------------*/
/*---------------------------------------------------------------------------------------------------*/

//suppose the frequency of test chip is 18.432MHz

#define   FOSC    18432000L

//-----------------------------------------

P_SW2   EQU     0BAH                    //Peripheral function switch register

S3_S    EQU     02H                     //P_SW2.1

//-----------------------------------------

        ORG     0000H
        LJMP    MAIN

//-----------------------------------------

        ORG     0100H

MAIN:
        MOV     SP,     #3FH

        ANL     P_SW2,  #NOT S3_S       //S3_S0=0 (P0.0/RxD3, P0.1/TxD3)

//      ORL     P_SW2,  #S3_S           //S3_S0=1 (P5.0/RxD3_2, P5.1/TxD3_2)

        SJMP    $                        //program end

        END
```

STC MCU Limited.

1.11.8 Test Porgram that Switch UART4 (C and ASM)

1.C Program Listing

```
/*---------------------------------------------------------------------------------------------------*/
/* --- STC MCU  Limited. ---------------------------------------------------------------------------*/
/* --- Exam Program that switch STC15W4K32S4  series UART4 in serveral ports ------------*/
/* --- Mobile: (86)13922805190 ---------------------------------------------------------------------*/
/* --- Fax: 86-755-82905966 ------------------------------------------------------------------------*/
/* --- Tel: 86-755-82948412 ------------------------------------------------------------------------*/
/* --- Web: www.STCMCU.com -------------------------------------------------------------------------*/
/* If you want to use the program or the program referenced in the  ------------------------------*/
/* article, please specify in which data and procedures from STC    ------------------------------*/
/*---- In Keil C development environment, select the Intel 8052 to compiling ------------------*/
/*----  And only contain < reg51.h > as header file ---------------------------------------------*/
/*---------------------------------------------------------------------------------------------------*/

//suppose the frequency of test chip is 18.432MHz

#include "reg51.h"

#define   FOSC    18432000L

//-----------------------------------------

sfr       P_SW2   =       0xBA;             //Peripheral function switch register

#define   S4_S    0x04                      //P_SW2.2

//-----------------------------------------

void main()
{
          P_SW2   &=      ~S4_S;            //S4_S0=0 (P0.2/RxD4, P0.3/TxD4)

//        P_SW2   |=      S4_S;             //S4_S0=1 (P5.2/RxD4_2, P5.3/TxD4_2)

          while (1);                        //program end
}
```

STC MCU Limited.

2. Assembler Listing

```
/*---------------------------------------------------------------------------------------------------------*/
/* --- STC MCU  Limited. ---------------------------------------------------------------------------------*/
/* --- Exam Program that switch STC15W4K32S4  series UART4 in serveral ports ------------*/
/* --- Mobile: (86)13922805190 ---------------------------------------------------------------------------*/
/* --- Fax: 86-755-82905966 ------------------------------------------------------------------------------*/
/* --- Tel: 86-755-82948412 ------------------------------------------------------------------------------*/
/* --- Web: www.STCMCU.com -------------------------------------------------------------------------------*/
/* If you want to use the program or the program referenced in the  ----------------------------*/
/* article, please specify in which data and procedures from STC    ----------------------------*/
/*---- In Keil C development environment, select the Intel 8052 to compiling ------------------*/
/*----  And only contain < reg51.h > as header file ------------------------------------------------*/
/*---------------------------------------------------------------------------------------------------------*/

//suppose the frequency of test chip is 18.432MHz

#define   FOSC    18432000L

//-----------------------------------------

P_SW2   EQU     0BAH                    //Peripheral function switch register

S4_S0   EQU     04H                     //P_SW2.2

//-----------------------------------------

        ORG     0000H
        LJMP    MAIN

//-----------------------------------------

        ORG     0100H

MAIN:
        MOV     SP,     #3FH

        ANL     P_SW2,  #NOT  S4_S      //S4_S0=0 (P0.2/RxD4, P0.3/TxD4)

//      ORL     P_SW2,  #S4_S           //S4_S0=1 (P5.2/RxD4_2, P5.3/TxD4_2)

        SJMP    $                       /program end

        END
```

STC MCU Limited.

1.12 Global Unique Identification Number (ID)

The latest generation of STC MCU ----STC15 series MCU all have a global unique identification number (ID) when out of factory. The global unique ID number is located in the last 7 bytes units of program memory in the latest STC15 series MCU, which can not be modified. But the all program area of IAP15 series MCU, which is open to user, can be modified. That using STC15 series MCU and its EEPROM function which began to use from the starting address 0000H can effectively eliminate the attack to global unique ID when STC15 series MCU is protected by global unique ID.

In addition to the program memory of the last 7 bytes units store the only global ID, the content of internal RAM units F1H ~ F7H(for STC15F101W series and STC15W10x series MCU is the internal RAM units 71H ~ 77H) also is the global unique ID number. User can use “MOV @Ri” instruction read RAM unit F1~F7 to get the ID number after power on. If users need to the unique identification number to encrypt their procedures, detecting the procedures not be illegally modified should be done first. preventing the decryption to modification program, bypassing the judgment to global unique ID number .

Recommend to use the program memory of the last 7 bytes of global unique ID, instead of using the internal RAM units F1H - F7H (or internal RAM uints 71H - 77H) global unique ID number. Because the program memory of the last 7 bytes of a global unique ID number is more than difficult to attack than the internal RAM units F1H - F7H (or internal units RAM 71H - 77H).

STC MCU Limited.

//The following example program written by C language is to read internal ID number from RAM or Program Memory.

1.C Program Listing

```
/*---------------------------------------------------------------------------------------------------*/
/* --- STC MCU  Limited. ---------------------------------------------------------------------------*/
/* --- Exam Program that read internal ID number ---------------------------------------------------*/
/* --- Mobile: (86)13922805190 ----------------------------------------------------------------------*/
/* --- Fax: 86-755-82905966 -------------------------------------------------------------------------*/
/* --- Tel: 86-755-82948412 -------------------------------------------------------------------------*/
/* --- Web: www.STCMCU.com --------------------------------------------------------------------------*/
/* If you want to use the program or the program referenced in the  -----------------------------*/
/* article, please specify in which data and procedures from STC    -----------------------------*/
/*---- In Keil C development environment, select the Intel 8052 to compiling ---------------------*/
/*----  And only contain < reg51.h > as header file ------------------------------------------------*/
/*---------------------------------------------------------------------------------------------------*/

//suppose the frequency of test chip is 18.432MHz
#include "reg51.h"
typedef   unsigned char     BYTE;
typedef   unsigned int      WORD;

#define    URMD   0              //0: Timer 2 as Baud Rate Generator
                                 //1:Timer1 in mode 0 (16-bit auto-reload mode) as Baud Rate Generator
                                 //2:Timer1 in mode 2 (8-bit auto-reload mode) as Baud Rate Generator
```

```
sfr     T2H     =       0xd6;                   //High 8 bit of Timer 2
sfr     T2L     =       0xd7;                   //Low 8 bit of Timer 2

sfr     AUXR    =       0x8e;                   //Auxiliary Register

#define ID_ADDR_RAM             0xf1    //ID number be stored in RAM location 0F1H

//ID number be stored in the last 7 bytes of program memory
//#define ID_ADDR_ROM   0x03f9          //1K  MCU（eg. STC15F201EA, STC15F101EA)
//#define ID_ADDR_ROM   0x07f9          //2K  MCU（eg. STC15F402AD,
                                        //STC15F202EA, STC15F102EA)
//#define ID_ADDR_ROM   0x0bf9          //3K  MCU(eg. STC15F203EA, STC15F103EA)
//#define ID_ADDR_ROM   0x0ff9          //4K  MCU(eg. STC15F404AD, STC15F204EA,
                                        //STC15F104EA)
//#define ID_ADDR_ROM   0x13f9          //5K  MCU(eg.  STC15F206EA, STC15F106EA)
//#define ID_ADDR_ROM   0x1ff9          //8K  MCU(eg. STC15F2K08S2,  STC15F1K08AD,
                                        //STC15F408AD)
//#define ID_ADDR_ROM   0x27f9          //10K  MCU(eg. STC15F410AD)
//#define ID_ADDR_ROM   0x2ff9          //12K  MCU(eg. STC15W401AS)
//#define ID_ADDR_ROM   0x3ff9          //16K  MCU(eg. STC15F2K16S2,
                                        //STC15F1K16AD)
//#define ID_ADDR_ROM   0x4ff9          //20K  MCU(eg. STC15F2K20S2, STC15F1K20AD)
//#define ID_ADDR_ROM   0x5ff9          //24K  MCU（eg. STC15F1K24AD)
//#define ID_ADDR_ROM   0x6ff9          //28K  MCU(eg. STC15F1K28AD)
//#define ID_ADDR_ROM   0x7ff9          //32K  MCU(eg. STC15F2K32S2)
//#define ID_ADDR_ROM   0x9ff9          //40K  MCU(eg. STC15F2K40S2)
//#define ID_ADDR_ROM   0xbff9          //48K  MCU(eg. STC15F2K48S2)
//#define ID_ADDR_ROM   0xcff9          //52K  MCU(eg. STC15F2K52S2)
//#define ID_ADDR_ROM   0xdff9          //56K  MCU(eg. STC15F2K56S2)
#define ID_ADDR_ROM     0xeff9          //60K  MCU(eg. STC15W4K32S4)

//----------------------------------------

void   InitUart();
void   SendUart(BYTE dat);

//----------------------------------------
void   main()
{
        BYTE    idata   *iptr;
        BYTE    code    *cptr;
        BYTE    i;

        InitUart();                             //initialize serial port
```

STC MCU Limited.

```
        iptr =  ID_ADDR_RAM;                    //read ID number from RAM
        for (i=0; i<7; i++)                     //read 7 bytes
        {
                SendUart(*iptr++);              //send ID number to serial port
        }
        cptr = ID_ADDR_ROM;                     //read ID number from program memory
        for (i=0; i<7; i++)                     //read 7 bytes
        {
                SendUart(*cptr++);              //send ID number to serial port
        }

        while (1);                              //program end
}
/*----------------------------
Initialize serial port
----------------------------*/
void InitUart()
{
        SCON    =       0x5a;                           //UART1 in 8-bit variable baud rate mode
#if     URMD    ==      0
        T2L     =       0xd8;                           //Set the auto-reload parameter
        T2H     =       0xff;                           //115200 bps(65536-18432000/4/115200)
        AUXR    =       0x14;                           //T2 in 1T mode, strat up Timer 2
        AUXR    |=      0x01;                           //Timer 2 as baud-rate Generator of UART1
#elif   URMD    ==      1
        AUXR    =       0x40;                           //T1 in 1T mode
        TMOD    =       0x00;                           //Timer1 in mode 0(16-bit auto-reload mode
        TL1     =       0xd8;                           //Set the auto-reload parameter
        TH1     =       0xff;                           //115200 bps(65536-18432000/4/115200)
        TR1     =       1;                              //strat up Timer 1
#else
        TMOD    =       0x20;                           //Timer1 in mode 2 (8-bit auto-reload mode)
        AUXR    =       0x40;                           //T1 in 1T mode
        TH1     =       TL1     = 0xfb;                 //115200 bps(256 - 18432000/32/115200)
        TR1     =       1;
#endif
}

/*----------------------------
Send serial port data
----------------------------*/
void SendUart(BYTE dat)
{
        while (!TI);                                    //wait to finish transmitting
        TI = 0;
        SBUF = dat;                                     //Send serial port data
}
```

STC MCU Limited.

2. Assembler Listing

```
/*---------------------------------------------------------------------------------------------------------*/
/* --- STC MCU  Limited. ---------------------------------------------------------------------------------*/
/* --- Exam Program that read internal ID number ---------------------------------------------------------*/
/* --- Mobile: (86)13922805190 ----------------------------------------------------------------------------*/
/* --- Fax: 86-755-82905966 -------------------------------------------------------------------------------*/
/* --- Tel: 86-755-82948412 -------------------------------------------------------------------------------*/
/* --- Web: www.STCMCU.com --------------------------------------------------------------------------------*/
/* If you want to use the program or the program referenced in the  -----------------------------*/
/* article, please specify in which data and procedures from STC    -----------------------------*/
/*---- In Keil C development environment, select the Intel 8052 to compiling ----------------*/
/*----  And only contain < reg51.h > as header file ------------------------------------------------*/
/*---------------------------------------------------------------------------------------------------------*/

//suppose the frequency of test chip is 18.432MHz

#define   URMD   0              //0: Timer 2 as Baud Rate Generator
                                //1:Timer1 in mode 0 (16-bit auto-reload mode) as Baud Rate Generator
                                //2:Timer1 in mode 2 (8-bit auto-reload mode) as Baud Rate Generator
T2H       DATA   0D6H           //High 8 bit of Timer 2
T2L       DATA   0D7H           //Low 8 bit of Timer 2
AUXR      DATA   08EH           //Auxiliary Register
//-----------------------------------------

#define   ID_ADDR_RAM   0xf1          //ID number be stored in RAM location 0F1H
//ID number be stored in the last 7 bytes of program memory

//#define ID_ADDR_ROM   0x03f9        //1K MCU(eg. STC15F201EA, STC15F101EA)
//#define ID_ADDR_ROM   0x07f9        //2K MCU(eg. STC15F402AD, STC15F202EA,
                                      // STC15F102EA)
//#define ID_ADDR_ROM   0x0bf9        //3K MCU(eg. STC15F203EA, STC15F103EA)
//#define ID_ADDR_ROM   0x0ff9        //4K MCU(eg. STC15F404AD, STC15F204EA,
                                      //STC15F104EA)
//#define ID_ADDR_ROM   0x13f9        //5K MCU(eg. STC15F206EA, STC15F106EA)
//#define ID_ADDR_ROM   0x1ff9        //8K MCU(eg. STC15F2K08S2,  STC15F1K08AD,
                                      //STC15F408AD)
//#define ID_ADDR_ROM   0x27f9        //10K MCU(eg. STC15F410AD)
//#define ID_ADDR_ROM   0x2ff9        //12K MCU(eg. STC15W401AS)
//#define ID_ADDR_ROM   0x3ff9        //16K MCU(eg. STC15F2K16S2,STC15F1K16AD)
//#define ID_ADDR_ROM   0x4ff9        //20K MCU(eg. STC15F2K20S2)
//#define ID_ADDR_ROM   0x5ff9        //24K MCU(eg. STC15F1K24AD)
//#define ID_ADDR_ROM   0x6ff9        //28K MCU(eg. STC15F1K28AD)
//#define ID_ADDR_ROM   0x7ff9        //32K MCU(eg. STC15F2K32S2)
//#define ID_ADDR_ROM   0x9ff9        //40K MCU(eg. STC15F2K40S2)
//#define ID_ADDR_ROM   0xbff9        //48K MCU(eg. STC15F2K48S2)
//#define ID_ADDR_ROM   0xcff9        //52K MCU(eg. STC15F2K52S2)
//#define ID_ADDR_ROM   0xdff9        //56K MCU(eg. STC15F2K56S2)
#define   ID_ADDR_ROM   0xeff9        //60K MCU(eg. STC15W4K32S4)
```

STC MCU Limited.

```
//-----------------------------------------
        ORG     0000H
        LJMP    MAIN

//-----------------------------------------

        ORG     0100H

MAIN:
        MOV     SP,     #3FH

        LCALL   INIT_UART                       ////initialize serial port

        MOV   R0,       #ID_ADDR_RAM            //read ID number from RAM
        MOV   R1,       #7                      //read 7 bytes
NEXT1:
        MOV   A,        @R0
        LCALL SEND_UART                         //send ID number to serial port
        INC   R0
        DJNZ  R1,       NEXT1

        MOV   DPTR,     #ID_ADDR_ROM            //read ID number from program memory
        MOV   R1,       #7                      //read 7 bytes
NEXT2:
        CLR     A
        MOVC    A,      @A+DPTR
        LCALL   SEND_UART                       //send ID number to serial port
        INC     DPTR
        DJNZ    R1,     NEXT2

        SJMP    $                               //program end

/*----------------------------
Initialize serial port
----------------------------*/
INIT_UART:
        MOV     SCON,   #5AH            //UART1 in 8-bit variable baud rate mode
#if     URMD == 0
        MOV     T2L,    #0D8H           //Set the auto-reload value (65536-18432000/4/115200)
        MOV     T2H,    #0FFH
        MOV     AUXR,   #14H            //T2 in 1T mode, strat up Timer 2
        ORL     AUXR,   #01H            //Timer 2 as baud-rate Generator of UART1
```

STC MCU Limited.

```
#elif   URMD == 1
        MOV     AUXR,   #40H            //T1 in 1T mode
        MOV     TMOD,   #00H            //Timer1 in mode 0(16-bit auto-reload mode)
        MOV     TL1,    #0D8H           //Set the auto-reload value
                                        //(65536-18432000/4/115200)
        MOV     TH1,    #0FFH
        SETB    TR1                     //strat up Timer 1
#else
        MOV     TMOD,   #20H            //Timer1 in mode 2 (8-bit auto-reload mode)
        MOV     AUXR,   #40H            //T1 in 1T mode
        MOV     TL1,    #0FBH           //115200 bps(256 - 18432000/32/115200)
        MOV     TH1,    #0FBH
        SETB    TR1
#endif
        RET

/*---------------------------
Send serial port data
---------------------------*/
SEND_UART:
        JNB     TI,     $               //wait to finish transmitting
        CLR     TI
        MOV     SBUF,   A               //Send serial port data
        RET

        END
```

STC MCU Limited.

Chapter 2 Clock, Reset and Power Management

2.1 Clock

Except STC15F101W, STC15W10x, STC15W201S, STC15W404S and STC15W1K16S series MCU, the other STC15 series MCU all have two clock sources: internal high precise R/C clock and external clock (external input clock or external crystal oscillator). STC15F101W, STC15W10x, STC15W201S, STC15W404S and STC15W1K16S series without external clock only have internal high precise R/C clock. Iinternal high-precise R/C clock(±0.3%), ±1% temperature drift(-40℃~+85℃) while ± 0.6% in normal temperature (-20℃~+65℃).

The clock sources of STC15 series MCU are summarized as shown in the following table.

Clock Sources / MCU Type	Internal high-precise R/C clock(±0.3%), ±1% temperature drift(-40℃~+85℃) while ±0.6% in normal temperature (-20℃~+65℃)	external clock (external input clock or external crystal oscillator)
STC15F101W series	√	
STC15W10x series	√	
STC15W201S series	√	
STC15F408AD series	√	√
STC15W401AS series	√	√
STC15W404S series	√	
STC15F1K16S series	√	
STC15F2K60S2 series	√	√
STC15W4K32S4 series	√	√

√ means the corresponding series MCU have the corresponding clock source.

STC MCU Limited.

2.1.1 On-Chip Configurable Clock

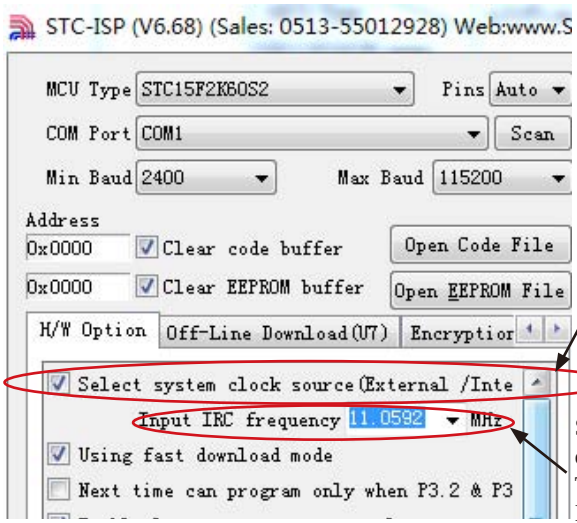

Select system clock source(Internal R/C clock or External clock)
Choice: Select the internal R/C clock
No-Choice: Select the external clock

Select the frequency of internal high precise R/C clock that the user program is running next time. The frequency also can be input directly.
Input range:5MHz ~ 35MHz

2.1.2 Divider for System Clock

A clock divider(CLK_DIV) is designed to slow down the operation speed of STC15F2K60S2 series MCU, to save the operating power dynamically. User can slow down the MCU by means of writing a non-zero value to the CLKS[2:0] bits in the CLK_DIV register. This feature is especially useful to save power consumption in idle mode as long as the user changes the CLKS[2:0] to a non-zero value before entering the idle mode.

Clock Division Register CLK_DIV (PCON2):

SFR Name	SFR Address	bit	B7	B6	B5	B4	B3	B2	B1	B0
CLK_DIV (PCON2)	97H	name	MCKO_S1	MCKO_S0	ADRJ	Tx_Rx	MCLKO_2	CLKS2	CLKS1	CLKS0

CLKS2	CLKS1	CLKS0	the control bit of system clock (System clock refers to the master clock that has been divided frequency, which is offered to CPU, UARTs, SPI, Timers, CCP/PWM/PCA and A/D Converter)
0	0	0	Master clock frequency/1, No division
0	0	1	Master clock frequency/2
0	1	0	Master clock frequency/4
0	1	1	Master clock frequency/8
1	0	0	Master clock frequency/16
1	0	1	Master clock frequency/32
1	1	0	Master clock frequency/64
1	1	1	Master clock frequency/128

The master clock can either be internal R/C clock or the external input clock or the external crystal oscillator.

STC MCU Limited.

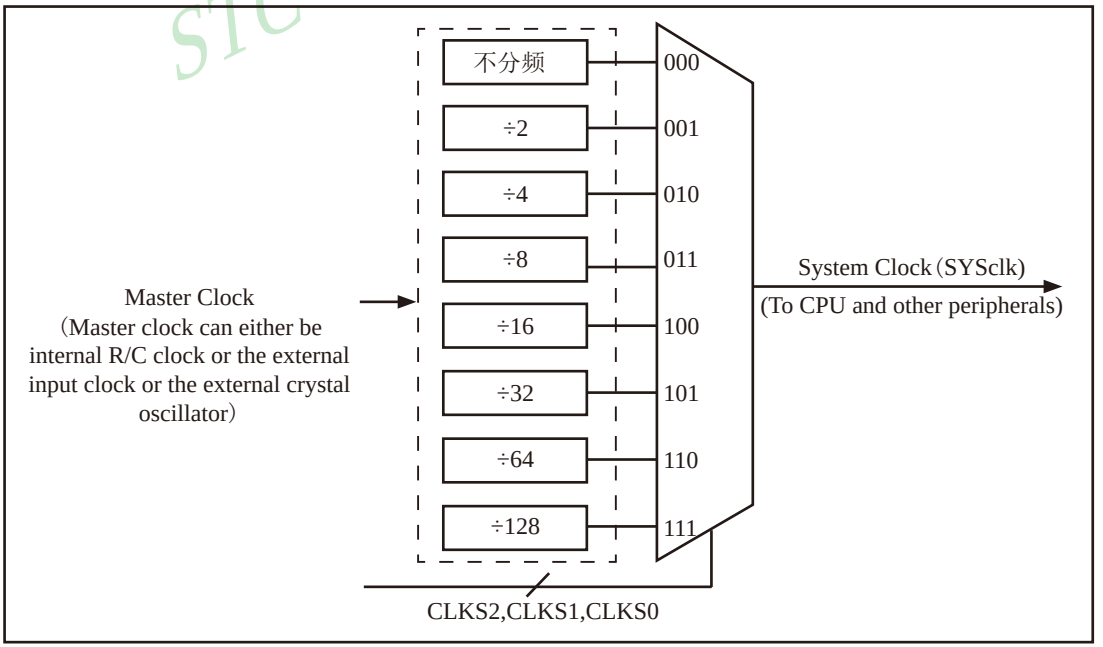

Clock Structure

SFR Name	SFR Address	bit	B7	B6	B5	B4	B3	B2	B1	B0
CLK_DIV (PCON2)	97H	name	MCKO_S1	MCKO_S0	ADRJ	Tx_Rx	MCLKO_2	CLKS2	CLKS1	CLKS0

MCKO_S1	MCKO_S0	the control bit of master clock output by dividing the frequency (The master clock can either be internal R/C clock or the external input clock or the external crystal oscillator)
0	0	Master clock do not output external clock
0	1	Master clock output external clock，but its frequency do not be divided，and the output clock frequency = MCLK / 1
1	0	Master clock output external clock，but its frequency is divided by 2，and the output clock frequency = MCLK / 2
1	1	Master clock output external clock，but its frequency is divided by 4，and the output clock frequency = MCLK / 4

The master clock can either be internal R/C clock or the external input clock or the external crystal oscillator.
MCLK is the frequency of master clock.

STC15F2K60S2 series MCU output master clock on MCLKO/P5.4

It is on MCLKO/P3.4 that the Programmable clock output of master clock of STC15 series 8-pin MCU (such as STC15F101W series). However, it is on MCLKO/P5.4 that the Programmable clock output of master clock of other STC15 series MCU including 16-pin or more than 16-pin MCU.

MCLKO_2：to select Master Clock output on where

0：Master Clock output on MCLKO/P5.4

1：Master Clock output on MCLKO_2/XTAL2/P1.6

The master clock can either be internal R/C clock or the external input clock or the external crystal oscillator.

ADRJ：the adjustment bit of ADC result

0：ADC_RES[7:0] store high 8-bit ADC result，ADC_RESL[1:0] store low 2-bit ADC result

1：ADC_RES[1:0] store high 2-bit ADC result，ADC_RESL[7:0] store low 8-bit ADC result

Tx_Rx：the set bit of relay and broadcast mode of UART1

0：UART1 works on normal mode

1：UART1 works on relay and broadcast mode，that to say output the input level state of RxD port to the outside TxD pin in real time, namely the external output of TxD pin can reflect the input level state of RxD port.

the RxD and TxD of UART1 can be switched in 3 groups of pins: [RxD/P3.0, TxD/P3.1];
[RxD_2/P3.6, TxD_2/P3.7];
[RxD_3/P1.6, TxD_3/P1.7].

STC MCU Limited.

2.1.3 Programmable Clock Output (or as Frequency Divider)

STC15 series MCU have six channel programmable clock outputs (such as STC15W4K32S4 series), at most. They are Master clock output MCLKO/P5.4, Timer 0 programmable clock output T0CLKO/P3.5, Timer 1 programmable clock output T1CLKO/P3.4, Timer 2 programmable clock output T2CLKO/P3.0, Timer 3 programmable clock output T3CLKO/P0.4, Timer 4 programmable clock output T4CLKO/P0.6. The speed of external programmable clock output is also not more than 13.5MHz, because the output speed of I/O port of STC15 series MCU is not more than 13.5MHz.

The programmable clock output types of STC15 series MCU are summarized as shown in the following table.

Programmable clock output / MCU Type	Master clock output (MCLKO/P5.4)	Timer 0 clock output (T0CLKO/P3.5)	Timer 0 clock output (T1CLKO/P3.4)	Timer 0 clock output (T2CLKO/P3.0)	Timer 0 clock output (T3CLKO/P0.4)	Timer 0 clock output (T4CLKO/P0.6)
STC15F101W series	Master clock output of this seies is on MCLKO/P3.4	√		√		
STC15W10x series	Master clock output of this seies is on MCLKO/P3.4	√		√		
STC15W201S series	√	√		√		
STC15F408AD series	√	√		√		
STC15W401AS series	√ (In addition, the master clock output of this series also could be set on MCLKO_2/P1.6)	√		√		
STC15W404S series	√ (In addition, the master clock output of this series also could be set on MCLKO_2/P1.6)	√	√	√		
STC15F1K16S series	√ (In addition, the master clock output of this series also could be set on MCLKO_2/ XTAL2/P1.6)	√	√	√		
STC15F2K60S2 series	√	√	√	√		
STC15W4K32S4 series	√ (In addition, the master clock output of this series also could be set on MCLKO_2/ XTAL2/P1.6)	√	√	√	√	√

√ means the corresponding series MCU have the corresponding programmable clock output.

STC MCU Limited.

2.1.3.1 Special Function Registers Related to Programmable Clock Output

Symbol	Description	Address	Bit Address and Symbol MSB LSB								Value after Power-on or Reset
AUXR	Auxiliary register	8EH	T0x12	T1x12	UART_M0x6	T2R	T2_C/$\overline{T}$	T2x12	EXTRAM	S1ST2	0000 0001B
INT_CLKO AUXR2	External Interrupt enable and Clock output register	8FH	-	EX4	EX3	EX2	-	T2CLKO	T1CLKO	T0CLKO	x000 x000B
CLK_DIV (PCON2)	Clock Division register	97H	MCKO_S1	MCKO_S1	ADRJ	Tx_Rx	MCLKO_2	CLKS2	CLKS1	CLKS0	0000 0000B
T4T3M	Timer 4 and Timer 3 Mode register	D1H	T4R	T4_C/$\overline{T}$	T4x12	T4CLKO	T3R	T3_C/$\overline{T}$	T3x12	T3CLKO	0000 0000B

The satement (used in C language) of Special function registers INT_CLKO/AUXR/CLK_DIV/T4T3M:

```
sfr     INT_CLKO    =   0x8F;    //The address statement of special function register INT_CLKO
sfr     AUXR        =   0x8E;    //The address statement of Special function register AUXR
sfr     CLK_DIV     =   0x97;    //The address statement of Special function register CLK_DIV
sfr     T4T3M       =   0xD1;    //The address statement of Special function register T4T3M
```

The satement (used in Assembly language) of Special function registers INT_CLKO/AUXR/CLK_DIV/T4T3M:

```
INT_CLKO    EQU     8FH     ;The address statement of special function register INT_CLKO
AUXR        EQU     8EH     ;The address statement of Special function register AUXR
CLK_DIV     EQU     97H     ;The address statement of Special function register CLK_DIV
T4T3M       EQU     D1H     ;The address statement of Special function register T4T3M
```

1. CLK_DIV (PCON2) : Clock Division register(Non bit addressable)

SFR Name	SFR Address	bit	B7	B6	B5	B4	B3	B2	B1	B0
CLK_DIV (PCON2)	97H	name	MCKO_S1	MCKO_S0	ADRJ	Tx_Rx	MCLKO_2	CLKS2	CLKS1	CLKS0

MCKO_S1	MCKO_S0	the control bit of master clock output by dividing the frequency (The master clock can either be internal R/C clock or the external input clock or the external crystal oscillator)
0	0	Master clock do not output external clock
0	1	Master clock output external clock，but its frequency do not be divided，and the output clock frequency = MCLK / 1
1	0	Master clock output external clock，but its frequency is divided by 2，and the output clock frequency = MCLK / 2
1	1	Master clock output external clock，but its frequency is divided by 4，and the output clock frequency = MCLK / 4

The master clock can either be internal R/C clock or the external input clock or the external crystal oscillator.
MCLK is the frequency of master clock.

STC15F2K60S2 series MCU output master clock on MCLKO/P5.4

It is on MCLKO/P3.4 that the Programmable clock output of master clock of STC15 series 8-pin MCU (such as STC15F101W series). However, it is on MCLKO/P5.4 that the Programmable clock output of master clock of other STC15 series MCU including 16-pin or more than 16-pin MCU.

MCLKO_2：to select Master Clock output on where

0：Master Clock output on MCLKO/P5.4

1：Master Clock output on MCLKO_2/XTAL2/P1.6

The master clock can either be internal R/C clock or the external input clock or the external crystal oscillator.

STC MCU Limited.

1. CLK_DIV (PCON2) : Clock Division register(Non bit addressable)

SFR Name	SFR Address	bit	B7	B6	B5	B4	B3	B2	B1	B0
CLK_DIV (PCON2)	97H	name	MCKO_S1	MCKO_S0	ADRJ	Tx_Rx	MCLKO_2	CLKS2	CLKS1	CLKS0

ADRJ：the adjustment bit of ADC result

0：ADC_RES[7:0] store high 8-bit ADC result，ADC_RESL[1:0] store low 2-bit ADC result

1：ADC_RES[1:0] store high 2-bit ADC result，ADC_RESL[7:0] store low 8-bit ADC result

Tx_Rx：the set bit of relay and broadcast mode of UART1

0：UART1 works on normal mode

1：UART1 works on relay and broadcast mode，that to say output the input level state of RxD port to the outside TxD pin in real time, namely the external output of TxD pin can reflect the input level state of RxD port.

the RxD and TxD of UART1 can be switched in 3 groups of pins: [RxD/P3.0, TxD/P3.1];
[RxD_2/P3.6, TxD_2/P3.7];
[RxD_3/P1.6, TxD_3/P1.7].

CLKS2	CLKS1	CLKS0	the control bit of system clock (System clock refers to the master clock that has been divided frequency, which is offered to CPU, UARTs, SPI, Timers, CCP/PWM/PCA and A/D Converter)
0	0	0	Master clock frequency/1, No division
0	0	1	Master clock frequency/2
0	1	0	Master clock frequency/4
0	1	1	Master clock frequency/8
1	0	0	Master clock frequency/16
1	0	1	Master clock frequency/32
1	1	0	Master clock frequency/64
1	1	1	Master clock frequency/128

The master clock can either be internal R/C clock or the external input clock or the external crystal oscillator.

2. INT_CLKO (AUXR2) : External Interrupt Enable and Clock Output register

SFR Name	SFR Address	bit	B7	B6	B5	B4	B3	B2	B1	B0
INT_CLKO AUXR2	8FH	name	-	EX4	EX3	EX2	-	T2CLKO	T1CLKO	T0CLKO

B0 - T0CLKO : Whether is P3.5/T1 configured for Timer 0(T0) programmable clock output T0CLKO or not.

1, P3.5/T1 is configured for Timer0 programmable clock output T0CLKO, the clock output frequency = T0 overflow/2

If Timer/Counter 0 in mode 0 (16 bit auto-reloadable mode),

and if $C/\overline{T}$ = 0, namely Timer/Counter 0 count on the internal system clock,

When T0 in 1T mode (AUXR.7/T0x12=1), the output frequency = (SYSclk)/(65536-[RL_TH0, RL_TL0])/2

When T0 in 12T mode (AUXR.7/T0x12=0), the output frequency = (SYSclk) /12/ (65536-[RL_TH0, RL_TL0])/2

and if $C/\overline{T}$ = 1, namely Timer/Counter 0 count on the external pulse input from P3.4/T0,

the output frequency = (T0_Pin_CLK) / (65536-[RL_TH0, RL_TL0])/2

If Timer/Counter 0 in mode 2 (8 bit auto-reloadable mode),

and if $C/\overline{T}$ = 0, namely Timer/Counter 0 count on the internal system clock,

When T0 in 1T mode(AUXR.7/T0x12=1), the output frequency = (SYSclk) / (256-TH0) / 2

When T0 in 12T mode(AUXR.7/T0x12=0), the output frequency = (SYSclk) / 12 / (256-TH0) / 2

and if $C/\overline{T}$ = 1, namely Timer/Counter 0 count on the external pulse input from P3.4/T0,

the output frequency = (T0_Pin_CLK) / (256-TH0) / 2

0, P3.5/T1 is not configure for Timer 0 programmable clock output T0CLKO

2. INT_CLKO (AUXR2) : External Interrupt Enable and Clock Output register

SFR Name	SFR Address	bit	B7	B6	B5	B4	B3	B2	B1	B0
INT_CLKO AUXR2	8FH	name	-	EX4	EX3	EX2	-	T2CLKO	T1CLKO	T0CLKO

B1 - T1CLKO : Whether is P3.4/T0 configured for Timer 1(T1) programmable clock output T1CLKO or not.

1, P3.4/T0 is configured for Timer1 programmable clock output T1CLKO, the clock output frequency = T1 overflow/2

If Timer/Counter 1 in mode 1 (16 bit auto-reloadable mode),

and if $C/\overline{T}$ = 0, namely Timer/Counter 1 count on the internal system clock,

When T1 in 1T mode (AUXR.6/T1x12=1), the output frequency = (SYSclk)/(65536-[RL_TH1, RL_TL1])/2

When T1 in 12T mode (AUXR.6/T1x12=0), the output frequency = (SYSclk) /12/ (65536-[RL_TH1, RL_TL1])/2

and if $C/\overline{T}$ = 1, namely Timer/Counter 1 count on the external pulse input from P3.5/T1,

the output frequency = (T1_Pin_CLK) / (65536-[RL_TH1, RL_TL1])/2

If Timer/Counter 1 in mode 2 (8 bit auto-reloadable mode),

and if $C/\overline{T}$ = 0, namely Timer/Counter 1 count on the internal system clock,

When T1 in 1T mode(AUXR.6/T1x12=1), the output frequency = (SYSclk) / (256-TH1) / 2

When T1 in 12T mode(AUXR.6/T1x12=0), the output frequency = (SYSclk) / 12 / (256-TH1) / 2

and if $C/\overline{T}$ = 1, namely Timer/Counter 1 count on the external pulse input from P3.5/T1,

the output frequency = (T1_Pin_CLK) / (256-TH1) / 2

0, P3.4/T0 is not configure for Timer 1 programmable clock output T1CLKO

B2 - T2CLKO : Whether is P3.0 configured for Timer 2(T2) programmable clock output T2CLKO or not.

1, P3.0 is configured for Timer2 programmable clock output T2CLKO, the clock output frequency = T2 overflow/2

If T2_ $C/\overline{T}$ = 0, namely Timer/Counter 2 count on the internal system clock,

When T2 in 1T mode (AUXR.2/T2x12=1), the output frequency = (SYSclk)/(65536-[RL_TH2, RL_TL2])/2

When T2 in 12T mode (AUXR.2/T2x12=0), the output frequency = (SYSclk) /12/ (65536-[RL_TH2, RL_TL2])/2

If T2_$C/\overline{T}$ = 1, namely Timer/Counter 2 count on the external pulse input from P3.1/T2,

the output frequency = (T2_Pin_CLK) / (65536-[RL_TH2, RL_TL2])/2

0, P3.0 is not configure for Timer 2 programmable clock output T2CLKO

B4 - EX2 : Enable bit of External Interrupt 2($\overline{INT2}$)

B5 - EX3 : Enable bit of External Interrupt 3($\overline{INT3}$)

B6 - EX4 : Enable bit of External Interrupt 4($\overline{INT4}$)

3. AUXR : Auxiliary register (Address:8EH, Non bit-addressable)

SFR name	Address	bit	B7	B6	B5	B4	B3	B2	B1	B0
AUXR	8EH	name	T0x12	T1x12	UART_M0x6	T2R	T2_$C/\overline{T}$	T2x12	EXTRAM	S1ST2

B7 - T0x12 : Timer 0 clock source bit.

0 : The clock source of Timer 0 is SYSclk/12. It will compatible to the traditional 8051 MCU

1 : The clock source of Timer 0 is SYSclk/1. It will drive the T0 faster than a traditional 8051 MCU

B6 - T1x12 : Timer 1 clock source bit.

0 : The clock source of Timer 1 is SYSclk/12. It will compatible to the traditional 8051 MCU

1 : The clock source of Timer 1 is SYSclk/1. It will drive the T0 faster than a traditional 8051 MCU

If T1 is used as the baud-rate generator of UART1, T1x12 will decide whether UART1 is 1T or 12T.

STC MCU Limited

3. **AUXR : Auxiliary register** (Address:8EH, Non bit-addressable)

SFR name	Address	bit	B7	B6	B5	B4	B3	B2	B1	B0
AUXR	8EH	name	T0x12	T1x12	UART_M0x6	T2R	T2_C/$\overline{T}$	T2x12	EXTRAM	S1ST2

B5 - UART_M0x6 : Baud rate select bit of UART1 while it is working under Mode-0
0 : The baud-rate of UART in mode 0 is SYSclk/12.
1 : The baud-rate of UART in mode 0 is SYSclk/2.

B4 - T2R: Timer 2 Run control bit
0 : not run Timer 2;
1 : run Timer 2.

B3 - T2_C/$\overline{T}$: Counter or timer 2 selector
0 : as Timer (namely count on internal system clock)
1 : as Counter (namely count on the external pulse input from T2/P3.1)

B2 - T2x12 : Timer 2 clock source bit.
0 : The clock source of Timer 2 is SYSclk/12.
1 : The clock source of Timer 2 is SYSclk/1.
If T2 is used as the baud-rate generator of UART1 or UART2, T1x12 will decide whether UART1 or UART2 is 1T or 12T.

B1 - EXTRAM : Internal / external RAM access control bit.
0 : On-chip auxiliary RAM is enabled.
1 : On-chip auxiliary RAM is always disabled.

B0 - S1ST2 : the control bit that UART1 select Timer 2 as its baud-rate generator.
0 : Select Timer 1 as the baud-rate generator of UART1
1 : Select Timer 2 as the baud-rate generator of UART1. Timer 1 is released to use in other functions.

STC MCU Limited.

4. T4T3M : Timer 4 and Timer 3 Mode register (Non bit-addressable)

SFR name	Address	bit	B7	B6	B5	B4	B3	B2	B1	B0
T4T3M	D1H	name	T4R	T4_C/$\overline{T}$	T4x12	T4CLKO	T3R	T3_C/$\overline{T}$	T3x12	T3CLKO

B7 - T4R: Timer 4 Run control bit
0 : not run Timer 4;
1 : run Timer 4.

B6 - T4_C/$\overline{T}$: Counter or timer 4 selector
0 : as Timer (namely count on internal system clock)
1 : as Counter (namely count on the external pulse input from T4/P0.7)

B5 - T4x12 : Timer 4 clock source bit.
0 : The clock source of Timer 4 is SYSclk/12.
1 : The clock source of Timer 4 is SYSclk/1.

4. T4T3M : Timer 4 and Timer 3 Mode register (Non bit-addressable)

SFR name	Address	bit	B7	B6	B5	B4	B3	B2	B1	B0
T4T3M	D1H	name	T4R	T4_C/$\overline{T}$	T4x12	T4CLKO	T3R	T3_C/$\overline{T}$	T3x12	T3CLKO

B4 - T4CLKO : Whether is P0.6 configured for Timer 4(T4) programmable clock output T4CLKO or not.

1, P0.6 is configured for Timer 4 programmable clock output T4CLKO, the clock output frequency = T4 overflow/2

If T4_ C/$\overline{T}$ = 0, namely Timer/Counter 4 count on the internal system clock,

When T4 in 1T mode (T4T3.5/T4x12=1), the output frequency = (SYSclk)/(65536-[RL_TH4, RL_TL4])/2

When T4 in 12T mode (T4T3.5/T4x12=0), the output frequency = (SYSclk) /12/ (65536-[RL_TH4, RL_TL4])/2

If T4_C/$\overline{T}$ = 1, namely Timer/Counter 4 count on the external pulse input from P0.7/T4,

the output frequency = (T4_Pin_CLK) / (65536-[RL_TH4, RL_TL4])/2

0, P0.6 is not configure for Timer 4 programmable clock output T4CLKO

B3 - T3R： Timer 3 Run control bit

0 ： not run Timer 3;

1 ： run Timer 3.

B2 - T3_C/$\overline{T}$: Counter or timer 3 selector

0 ： as Timer (namely count on internal system clock)

1 ： as Counter (namely count on the external pulse input from T3/P0.5)

B1 - T3x12 : Timer 3 clock source bit.

0 ： The clock source of Timer 3 is SYSclk/12.

1 ： The clock source of Timer 3 is SYSclk/1.

B0 - T3CLKO : Whether is P0.4 configured for Timer 3(T3) programmable clock output T3CLKO or not.

1, P0.4 is configured for Timer 3 programmable clock output T3CLKO, the clock output frequency = T3 overflow / 2

If T3_ C/$\overline{T}$ = 0, namely Timer/Counter 3 count on the internal system clock,

When T3 in 1T mode (T4T3.1/T3x12=1), the output frequency = (SYSclk)/(65536-[RL_TH3, RL_TL3])/2

When T3 in 12T mode (T4T3.1/T3x12=0), the output frequency = (SYSclk) /12/ (65536-[RL_TH3, RL_TL3])/2

If T3_C/$\overline{T}$ = 1, namely Timer/Counter 3 count on the external pulse input from P0.5/T3,

the output frequency = (T3_Pin_CLK) / (65536-[RL_TH3, RL_TL3])/2

0, P0.4 is not configure for Timer 3 programmable clock output T3CLKO

STC MCU Limited.

2.1.3.2 Master Clock Output and Demo Program(C and ASM)

The master clock can either be internal R/C clock or the external input clock or the external crystal oscillator. The speed of external programmable clock output of 5V MCU is also not more than 13.5MHz, because the output speed of I/O port of STC15 series 5V MCU is not more than 13.5MHz. The speed of external programmable clock output of 3.3V MCU is also not more than 8MHz, because the output speed of I/O port of STC15 series 3.3V MCU is not more than 8MHz.

CLK_DIV (PCON2) : Clock Division Register (Non bit-addressable)

SFR Name	SFR Address	bit	B7	B6	B5	B4	B3	B2	B1	B0
CLK_DIV (PCON2)	97H	name	MCKO_S1	MCKO_S0	ADRJ	Tx_Rx	MCLKO_2	CLKS2	CLKS1	CLKS0

How to output clock by using MCLKO/P5.4 or MCLKO_2/XTAL2/P1.6.

The clock output of MCLKO/P5.4 or MCLKO_2/XTAL2/P1.6 is controlled by the bits MCKO_S1 and MCKO_S0 of register CLK_DIV. MCLKO/P5.4 or MCLKO_2/XTAL2/P1.6 can be configured for master clcok output whose frequency also can be choose by setting MCKO_S1 (CLK_DIV.7) and MCKO_S0 (CLK_DIV.6).

MCKO_S1	MCKO_S0	the control bit of master clock output by dividing the frequency (The master clock can either be internal R/C clock or the external input clock or the external crystal oscillator)
0	0	Master clock do not output external clock
0	1	Master clock output external clock，but its frequency do not be divided，and the output clock frequency = MCLK / 1
1	0	Master clock output external clock，but its frequency is divided by 2，and the output clock frequency = MCLK / 2
1	1	Master clock output external clock，but its frequency is divided by 4，and the output clock frequency = MCLK / 4

The master clock can either be internal R/C clock or the external input clock or the external crystal oscillator. MCLK is the frequency of master clock.

STC15F2K60S2 series MCU output master clock on MCLKO/P5.4

It is on MCLKO/P3.4 that the Programmable clock output of master clock of STC15 series 8-pin MCU (such as STC15F101W series). However, it is on MCLKO/P5.4 that the Programmable clock output of master clock of other STC15 series MCU including 16-pin or more than 16-pin MCU.

The speed of external programmable clock output of 5V MCU is also not more than 13.5MHz, because the output speed of I/O port of STC15 series 5V MCU is not more than 13.5MHz.

The speed of external programmable clock output of 3.3V MCU is also not more than 8MHz, because the output speed of I/O port of STC15 series 3.3V MCU is not more than 8MHz.

STC MCU Limited

the following is the demo program of Master clock output:

1. C Program Listing

```
/*---------------------------------------------------------------------------------------------------*/
/* --- STC MCU Limited. ----------------------------------------------------------------------------*/
/* --- Exam Program of Master clock output ---------------------------------------------------------*/
/* --- Mobile: (86)13922805190 ---------------------------------------------------------------------*/
/* --- Fax: 86-755-82905966 ------------------------------------------------------------------------*/
/* --- Tel: 86-755-82948412 ------------------------------------------------------------------------*/
/* --- Web: www.STCMCU.com -------------------------------------------------------------------------*/
/* If you want to use the program or the program referenced in the  ----------------------------*/
/* article, please specify in which data and procedures from STC    ----------------------------*/
/*---- In Keil C development environment, select the Intel 8052 to compiling ------------------*/
/*----  And only contain < reg51.h > as header file ---------------------------------------------*/
/*---------------------------------------------------------------------------------------------------*/

//suppose the frequency of test chip is 18.432MHz

#include "reg51.h"

typedef   unsigned char     BYTE;
typedef   unsigned int      WORD;

#define   FOSC    18432000L
//-----------------------------------------
sfr       CLK_DIV       =       0x97;           //Clock divider register

//-----------------------------------------

void main()
{
          CLK_DIV       =       0x40;            //0100,0000 the output frequency of P5.4 is SYSclk
//        CLK_DIV       =       0x80;           //1000,0000  the output frequency of P5.4 is SYSclk/2
//        CLK_DIV       =       0xC0;           //1100,0000  the output frequency of P5.4 is SYSclk/4

          while (1);
}
```

STC MCU Limited.

2. Assembler Listing

```
/*---------------------------------------------------------------------------------------------------*/
/* --- STC MCU  Limited. ---------------------------------------------------------------------------*/
/* --- Exam Program of Master clock output ---------------------------------------------------------*/
/* --- Mobile: (86)13922805190 ---------------------------------------------------------------------*/
/* --- Fax: 86-755-82905966 ------------------------------------------------------------------------*/
/* --- Tel: 86-755-82948412 ------------------------------------------------------------------------*/
/* --- Web: www.STCMCU.com -------------------------------------------------------------------------*/
/* If you want to use the program or the program referenced in the  ----------------------------*/
/* article, please specify in which data and procedures from STC    ----------------------------*/
/*---- In Keil C development environment, select the Intel 8052 to compiling ----------------*/
/*----  And only contain < reg51.h > as header file ------------------------------------------*/
/*---------------------------------------------------------------------------------------------------*/

//suppose the frequency of test chip is 18.432MHz

CLK_DIV         DATA    097H                    //Clock divider register

;-----------------------------------------
;interrupt vector table

        ORG     0000H
        LJMP    MAIN
;-----------------------------------------

        ORG     0100H
MAIN:
        MOV     SP,             #3FH            //initial SP
        MOV     CLK_DIV,        #40H            //0100,0000  the output frequency of P5.4 is SYSclk
//      MOV     CLK_DIV,        #80H            //1000,0000  the output frequency of P5.4 is SYSclk/2
//      MOV     CLK_DIV,        #C0H            //1100,0000  the output frequency of P5.4 is SYSclk/4
        SJMP    $

//-----------------------------------------
        END
```

STC MCU Limited.

2.1.3.3 Timer 0 Programmable Clock Output and Demo Program(C and ASM)

How to output clock by using T0CLKO/P3.5.

The clock output of T0CLKO/P3.5 is controlled by the bit T0CLKO of register INT_CLKO (AUXR2).

AUXR2.0 - T0CLKO : 1, enable clock output
0, disable clock output

The ouput clock frequency of T0CLKO is controlled by Timer 0. When it is used as programmable clcok output, Timer 0 must work in **mode 0 (16-bit auto-reload timer/counter) or mode 2(8-bit auto-reload timer/counter) and** don't enable its interrupt to avoid CPU entering interrupt repeatly unless special circumstances.

INT_CLKO (AUXR2) (Address:8FH)

When T0CLKO/INT_CLKO.0=1, P3.5/T1 is configured for Timer0 programmable clock output T0CLKO.

The clock output frequency = T0 overflow/2

If Timer/Counter 0 in mode 0 (16 bit auto-reloadable mode),
and if C/$\overline{T}$ = 0, namely Timer/Counter 0 count on the internal system clock,
When T0 in 1T mode (AUXR.7/T0x12=1), the output frequency = (SYSclk)/(65536-[RL_TH0, RL_TL0])/2
When T0 in 12T mode (AUXR.7/T0x12=0), the output frequency = (SYSclk) /12/ (65536-[RL_TH0, RL_TL0])/2
and if C/$\overline{T}$ = 1, namely Timer/Counter 0 count on the external pulse input from P3.4/T0,
the output frequency = (T0_Pin_CLK) / (65536-[RL_TH0, RL_TL0])/2

RL_TH0 is the reloaded register of **TH0, RL_TL0** is the reload register of TL0.

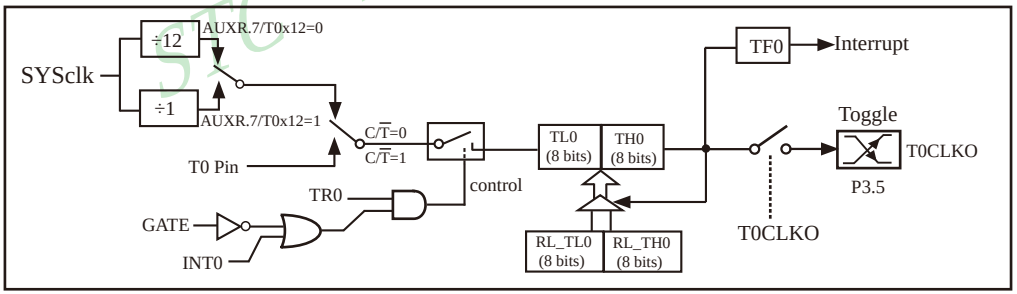

Timer/Counter 0 mode 0: 16 bit auto-reloadable mode

When T0CLKO/INT_CLKO.0=1, P3.5/T1 is configured for Timer 0 programmable clock output T0CLKO.

The clock output frequency = T0 overflow/2

If Timer/Counter 0 in mode 2 (8 bit auto-reloadable mode),
and if C/$\overline{T}$ = 0, namely Timer/Counter 0 count on the internal system clock,
When T0 in 1T mode(AUXR.7/T0x12=1), the output frequency = (SYSclk) / (256-TH0) / 2
When T0 in 12T mode(AUXR.7/T0x12=0), the output frequency = (SYSclk) / 12 / (256-TH0) / 2
and if C/$\overline{T}$ = 1, namely Timer/Counter 0 count on the external pulse input from P3.4/T0,
the output frequency = (T0_Pin_CLK) / (256-TH0) / 2

STC MCU Limited.

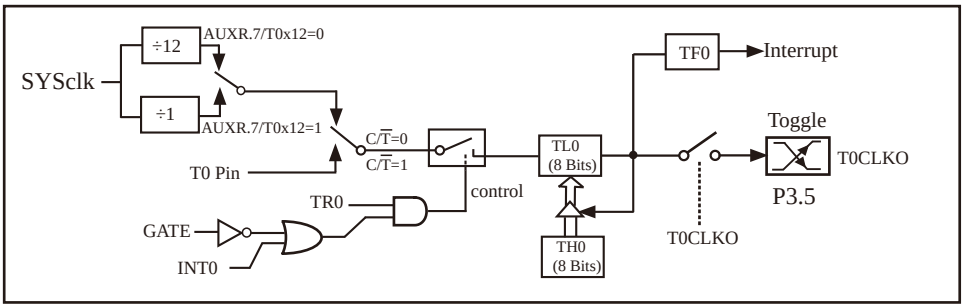

Timer/Counter 0 mode 2: 8 bit auto-reloadable mode

The following is the example program that Timer 0 output programmable clock by dividing the frequency of internal system clock or the clock input from external pin T0/P3.4 (C and assembly):

1. C Program Listing

```
/*-------------------------------------------------------------------------------------------------*/
/* --- STC MCU  Limited. ---------------------------------------------------------------------------*/
/* --- Exam Program of Timer 0 porgrammable clock output -------------------------------------------*/
/* --- Mobile: (86)13922805190 ---------------------------------------------------------------------*/
/* --- Fax: 86-755-82905966 ------------------------------------------------------------------------*/
/* --- Tel: 86-755-82948412 ------------------------------------------------------------------------*/
/* --- Web: www.STCMCU.com -------------------------------------------------------------------------*/
/* If you want to use the program or the program referenced in the  ----------------------------*/
/* article, please specify in which data and procedures from STC  ------------------------------*/
/*---- In Keil C development environment, select the Intel 8052 to compiling ------------------*/
/*----  And only contain < reg51.h > as header file ------------------------------------------------*/
/*-------------------------------------------------------------------------------------------------*/

//suppose the frequency of test chip is 18.432MHz

#include "reg51.h"

typedef unsigned char BYTE;
typedef unsigned int WORD;

#define FOSC 18432000L

//-----------------------------------------------
sfr     AUXR        =     0x8e;
sfr     INT_CLKO    =     0x8f;

sbit    T0CLKO      =     P3^5;

#define  F38_4KHz       (65536-FOSC/2/38400)                 //1T Mode
//#define  F38_4KHz       (65536-FOSC/2/12/38400)             //12T Mode
```

STC MCU Limited.

```
//-----------------------------------------------
void main()
{
        AUXR    |=      0x80;                   //Timer 0 in 1T mode
//      AUXR    &=      ~0x80;                  //Timer 0 in 12T mode

        TMOD    =       0x00;                   //set Timer0 in mode 0(16 bit auto-reloadable mode)

        TMOD    &=      ~0x04;                  //C/T0=0, count on internal system clock
//      TMOD    |=      0x04;                   //C/T0=1, count on external pulse input from T0 pin

        TL0     =       F38_4KHz;               //Initial timing value
        TH0     =       F38_4KHz >> 8;
        TR0     =       1;
        INT_CLKO        =       0x01;

        while (1);
}
```

STC MCU Limited.

2. Assembler Listing

```
/*-------------------------------------------------------------------------------------------------*/
/* --- STC MCU  Limited. ---------------------------------------------------------------------------*/
/* --- Exam Program of Timer 0 porgrammable clock output -------------------------------------------*/
/* --- Mobile: (86)13922805190 ---------------------------------------------------------------------*/
/* --- Fax: 86-755-82905966 ------------------------------------------------------------------------*/
/* --- Tel: 86-755-82948412 ------------------------------------------------------------------------*/
/* --- Web: www.STCMCU.com -------------------------------------------------------------------------*/
/* If you want to use the program or the program referenced in the  ----------------------------*/
/* article, please specify in which data and procedures from STC    ----------------------------*/
/*---- In Keil C development environment, select the Intel 8052 to compiling ------------------*/
/*----  And only contain < reg51.h > as header file ---------------------------------------------*/
/*-------------------------------------------------------------------------------------------------*/

//suppose the frequency of test chip is 18.432MHz

AUXR            DATA    08EH
INT_CLKO        DATA    08FH

T0CLKO          BIT     P3.5

F38_4KHz        EQU     0FF10H          //38.4KHz(1T mode, 65536-18432000/2/38400)
//F38_4KHz      EQU     0FFECH          //38.4KHz(12T mode,(65536-18432000/2/12/38400)
//-----------------------------------------------
```

```
        ORG     0000H
        LJMP    MAIN

//---------------------------------------
        ORG     0100H
MAIN:
        MOV     SP,     #3FH

        ORL     AUXR,   #80H                    //Timer 0 in 1T mode
//      ANL     AUXR,   #7FH                    //Timer 0 in 12T mode

        MOV     TMOD,   #00H                    //set Timer0 in mode 0(16 bit auto-reloadable mode)

        ANL     TMOD,   #0FBH                   //C/T0=0, count on internal system clock
//      ORL     TMOD,   #04H                    //C/T0=1, count on external pulse input from T0 pin

        MOV     TL0,    #LOW F38_4KHz           //Initial timing value
        MOV     TH0,    #HIGH F38_4KHz
        SETB    TR0
        MOV     INT_CLKO,       #01H

        SJMP    $

;---------------------------------------

        END
```

STC MCU Limited.

2.1.3.4 Timer 1 Programmable Clock Output and Demo Program(C and ASM)

How to output clock by using T1CLKO/P3.4.

The clock output of T1CLKO/P3.4 is controlled by the bit T1CLKO of register INT_CLKO (AUXR2).

AUXR2.1 - T1CLKO : 1, enable clock output
0, disable clock output

The ouput clock frequency of T1CLKO is controlled by Timer 1. When it is used as programmable clcok output, Timer 1 must work in **mode 1 (16-bit auto-reload timer/counter) or mode 2(8-bit auto-reload timer/counter) and** don't enable its interrupt to avoid CPU entering interrupt repeatly unless special circumstances.

INT_CLKO (AUXR2) (Address:8FH)

When T1CLKO/INT_CLKO.1=1, P3.4/T0 is configured for Timer 1 programmable clock output T1CLKO.

The clock output frequency = T1 overflow/2

If Timer/Counter 1 in mode 1 (16 bit auto-reloadable mode),
and if $C/\overline{T}$ = 0, namely Timer/Counter 1 count on the internal system clock,
When T1 in 1T mode (AUXR.6/T1x12=1), the output frequency = (SYSclk)/(65536-[RL_TH1, RL_TL1])/2
When T1 in 12T mode (AUXR.6/T1x12=0), the output frequency = (SYSclk) /12/ (65536-[RL_TH1, RL_TL1])/2
and if $C/\overline{T}$ = 1, namely Timer/Counter 1 count on the external pulse input from P3.5/T1,
the output frequency = (T1_Pin_CLK) / (65536-[RL_TH1, RL_TL1])/2

RL_TH1 is the reloaded register of **TH1, RL_TL1** is the reload register of TL1.

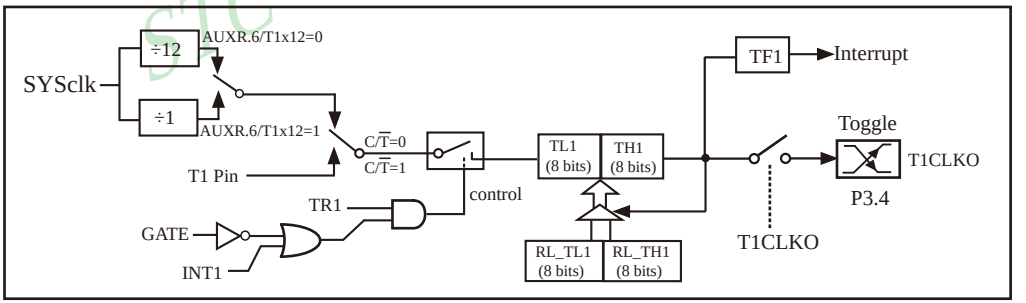

Timer/Counter 1 mode 0: 16 bit auto-reloadable mode

When T1CLKO/INT_CLKO.1=1, P3.4/T0 is configured for Timer 1 programmable clock output T1CLKO.

The clock output frequency = T1 overflow/2

If Timer/Counter 1 in mode 2 (8 bit auto-reloadable mode),
and if $C/\overline{T}$ = 0, namely Timer/Counter 1 count on the internal system clock,
When T1 in 1T mode(AUXR.6/T1x12=1), the output frequency = (SYSclk) / (256-TH1) / 2
When T1 in 12T mode(AUXR.6/T1x12=0), the output frequency = (SYSclk) / 12 / (256-TH1) / 2
and if $C/\overline{T}$ = 1, namely Timer/Counter 1 count on the external pulse input from P3.5/T1,
the output frequency = (T1_Pin_CLK) / (256-TH1) / 2

RL_TH1 is the reloaded register of **TH1, RL_TL1** is the reload register of TL1.

STC MCU Limited.

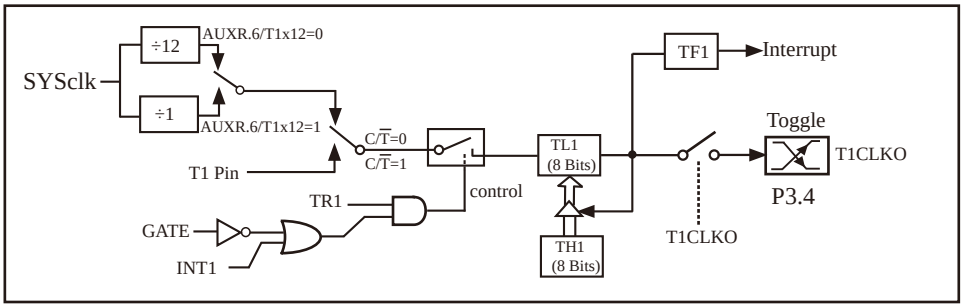

Timer/Counter 1 mode 2: 8 bit auto-reloadable mode

The following is the example program that Timer 1 output programmable clock by dividing the frequency of internal system clock or the clock input from external pin T1/P3.5 (C and assembly):

1. C Program Listing

```
/*-------------------------------------------------------------------------------------------------*/
/* --- STC MCU  Limited. ---------------------------------------------------------------------------*/
/* --- Exam Program of Timer 1 porgrammable clock output -------------------------------------------*/
/* --- Mobile: (86)13922805190 ---------------------------------------------------------------------*/
/* --- Fax: 86-755-82905966 ------------------------------------------------------------------------*/
/* --- Tel: 86-755-82948412 ------------------------------------------------------------------------*/
/* --- Web: www.STCMCU.com -------------------------------------------------------------------------*/
/* If you want to use the program or the program referenced in the  ----------------------------*/
/* article, please specify in which data and procedures from STC    ----------------------------*/
/*---- In Keil C development environment, select the Intel 8052 to compiling ----------------*/
/*----  And only contain < reg51.h > as header file ------------------------------------------------*/
/*-------------------------------------------------------------------------------------------------*/

//suppose the frequency of test chip is 18.432MHz

#include "reg51.h"

typedef   unsigned char     BYTE;
typedef   unsigned int      WORD;

#define   FOSC    18432000L

//-----------------------------------------
sfr   AUXR        =         0x8e;
sfr   INT_CLKO    =         0x8f;

sbit  T1CLKO      =         P3^4;

#define   F38_4KHz          (65536-FOSC/2/38400)              //1T Mode
//#define F38_4KHz          (65536-FOSC/2/12/38400)           //12T Mode
```

STC MCU Limited.

```
//-----------------------------------------------
void main()
{
        AUXR    |=      0x40;                   //Timer 1 in 1T mode
//      AUXR    &=      ~0x40;                  //Timer 1 in 12T mode

        TMOD    =       0x00;                   //set Timer 1 in mode 0(16 bit auto-reloadable mode)

        TMOD    &=      ~0x40;                  //C/T1=0, count on internal system clock
//      TMOD    |=      0x40;                   //C/T1=1, count on external pulse input from T1 pin

        TL1     =       F38_4KHz;               //Initial timing value
        TH1     =       F38_4KHz >> 8;
        TR1     =       1;
        INT_CLKO        =       0x02;

        while (1);
}
```

STC MCU Limited.

2. Assembler Listing

```
/*-------------------------------------------------------------------------------------------------*/
/* --- STC MCU  Limited. ---------------------------------------------------------------------*/
/* --- Exam Program of Timer 1 porgrammable clock output -------------------------------------*/
/* --- Mobile: (86)13922805190 ----------------------------------------------------------------*/
/* --- Fax: 86-755-82905966 -------------------------------------------------------------------*/
/* --- Tel: 86-755-82948412 -------------------------------------------------------------------*/
/* --- Web: www.STCMCU.com --------------------------------------------------------------------*/
/* If you want to use the program or the program referenced in the  ----------------------------*/
/* article, please specify in which data and procedures from STC    ----------------------------*/
/*---- In Keil C development environment, select the Intel 8052 to compiling ------------------*/
/*----  And only contain < reg51.h > as header file ------------------------------------------------*/
/*-------------------------------------------------------------------------------------------------*/

//suppose the frequency of test chip is 18.432MHz

AUXR            DATA    08EH
INT_CLKO        DATA    08FH

T1CLKO          BIT     P3.4
F38_4KHz        EQU     0FF10H          //38.4KHz(1T mode, 65536-18432000/2/38400)
//F38_4KHz      EQU     0FFECH          //38.4KHz(12T mode, (65536-18432000/2/12/38400)
```

```
        ORG     0000H
        LJMP    MAIN

//-----------------------------------------------
        ORG     0100H
MAIN:
        MOV     SP,     #3FH

        ORL     AUXR,   #40H                    //Timer 1 in 1T mode
//      ANL     AUXR,   #0BFH                   //Timer 1 in 12T mode

        MOV     TMOD,   #00H                    //set Timer 1 in mode 0(16 bit auto-reloadable mode)

        ANL     TMOD,   #0BFH                   //C/T1=0,  count on internal system clock
//      ORL     TMOD,   #40H                    //C/T1=1, count on external pulse input from T1 pin

        MOV     TL1,    #LOW F38_4KHz           //Initial timing value
        MOV     TH1,    #HIGH F38_4KHz
        SETB    TR1
        MOV     INT_CLKO,       #02H

        SJMP    $

;-----------------------------------------------

        END
```

STC MCU Limited.

2.1.3.5 Timer 2 Programmable Clock Output and Demo Program (C and ASM)

Internal Structure Diagram of Timer 2 is shown below:

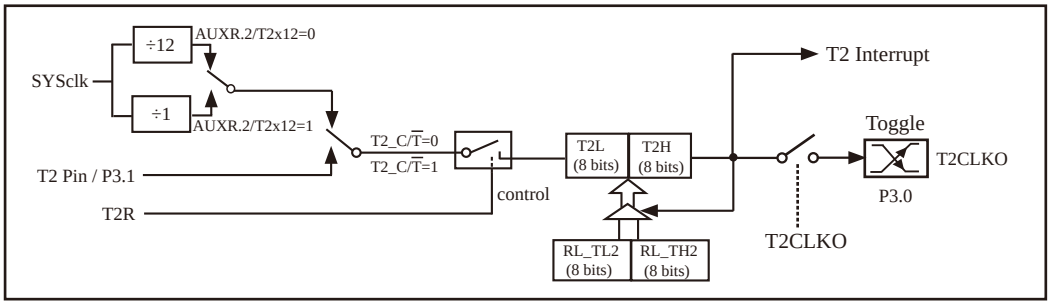

Timer / Counter 2 Operating Mode : 16 bit auto-reloadable Mode

How to output clock by using T2CLKO/P3.0.

The clock output of T2CLKO/P3.0 is controlled by the bit T2CLKO of register INT_CLKO (AUXR2).

AUXR2.2 - T2CLKO : 1, enable clock output
0, disable clock output

The ouput clock frequency of T2CLKO is controlled by Timer 2. When it is used as programmable clcok output, Timer 2 interrupt don't be enabled to avoid CPU entering interrupt repeatly unless special circumstances.

INT_CLKO (AUXR2) (Address:8FH)

When T2CLKO/INT_CLKO.2=1, P3.0 is configured for Timer 2 programmable clock output T2CLKO.

The clock output frequency = T2 overflow/2

If T2_ $C/\overline{T}$ = 0, namely Timer/Counter 2 count on the internal system clock,

When T2 in 1T mode (AUXR.2/T2x12=1), the output frequency = (SYSclk)/(65536-[RL_TH2, RL_TL2])/2

When T2 in 12T mode (AUXR.2/T2x12=0), the output frequency = (SYSclk) /12/ (65536-[RL_TH2, RL_TL2])/2

If T2_$C/\overline{T}$ = 1, namely Timer/Counter 2 count on the external pulse input from P3.1/T2,

the output frequency = (T2_Pin_CLK) / (65536-[RL_TH2, RL_TL2])/2

RL_TH2 is the reloaded register of **T2H, RL_TL2** is the reload register of T2L.

STC MCU Limited.

The following is the example program that Timer 2 output programmable clock by dividing the frequency of internal system clock or the clock input from external pin T2/P3.1 (C and assembly):

1. C Program Listing

```
/*-------------------------------------------------------------------------------------------------*/
/* --- STC MCU  Limited. ---------------------------------------------------------------------------*/
/* --- Exam Program of Timer 2 porgrammable clock output -------------------------------------------*/
/* --- Mobile: (86)13922805190 ---------------------------------------------------------------------*/
/* --- Fax: 86-755-82905966 ------------------------------------------------------------------------*/
/* --- Tel: 86-755-82948412 ------------------------------------------------------------------------*/
/* --- Web: www.STCMCU.com -------------------------------------------------------------------------*/
/* If you want to use the program or the program referenced in the  ----------------------------*/
/* article, please specify in which data and procedures from STC    ----------------------------*/
/*---- In Keil C development environment, select the Intel 8052 to compiling ------------------*/
/*----  And only contain < reg51.h > as header file ---------------------------------------------*/
/*-------------------------------------------------------------------------------------------------*/

//suppose the frequency of test chip is 18.432MHz

#include "reg51.h"

typedef unsigned char   BYTE;
typedef unsigned int    WORD;

#define FOSC 18432000L

//-----------------------------------------

sfr     AUXR        = 0x8e;
sfr     INT_CLKO    = 0x8f;
sfr     T2H         = 0xD6;
sfr     T2L         = 0xD7;

sbit    T2CLKO      = P3^0;

#define   F38_4KHz      (65536-FOSC/2/38400)          //1T mode
//#define F38_4KHz      (65536-FOSC/2/12/38400)       //12T mode

//-----------------------------------------

void main()
{
        AUXR    |=    0x04;                           //Timer 2 in 1T mode
//      AUXR    &=    ~0x04;                          //Timer 2 in 12T mode
```

STC MCU Limited.

```
        AUXR    &=      ~0x08;          //T2_C/T=0, count on internal system clock
//      AUXR    |=      0x08;           //T2_C/T=1,  count on external pulse input from T2(P3.1) pin
        T2L     =       F38_4KHz;                       //Initial timing value
        T2H     =       F38_4KHz >> 8;

        AUXR    |=      0x10;
        INT_CLKO        =       0x04;

        while (1);
}
```

STC MCU Limited.

2. Assembler Listing

```
/*---------------------------------------------------------------------------------------------------*/
/* --- STC MCU  Limited. ---------------------------------------------------------------------------*/
/* --- Exam Program of Timer 2 porgrammable clock output -------------------------------------------*/
/* --- Mobile: (86)13922805190 ---------------------------------------------------------------------*/
/* --- Fax: 86-755-82905966 ------------------------------------------------------------------------*/
/* --- Tel: 86-755-82948412 ------------------------------------------------------------------------*/
/* --- Web: www.STCMCU.com -------------------------------------------------------------------------*/
/* If you want to use the program or the program referenced in the  ----------------------------*/
/* article, please specify in which data and procedures from STC    ----------------------------*/
/*---- In Keil C development environment, select the Intel 8052 to compiling ------------------*/
/*----  And only contain < reg51.h > as header file ------------------------------------------------*/
/*---------------------------------------------------------------------------------------------------*/

//suppose the frequency of test chip is 18.432MHz


AUXR            DATA    08EH
INT_CLKO        DATA    08FH
T2H             DATA    0D6H
T2L             DATA    0D7H

T2CLKO          BIT     P3.0

F38_4KHz        EQU     0FF10H          //38.4KHz(1T mode, 65536-18432000/2/38400)
//F38_4KHz      EQU     0FFECH          //38.4KHz(12T mode, (65536-18432000/2/12/38400)

//-----------------------------------------------
```

```
        ORG     0000H
        LJMP    MAIN

//----------------------------------------

        ORG     0100H
MAIN:
        MOV     SP,     #3FH

        ORL     AUXR,   #04H                    //Timer 2 in 1T mode
//      ANL     AUXR,   #0FBH                   //Timer 2 in 12T mode

        ANL     AUXR,   #0F7H           //T2_C/T=0, count on internal system clock
//      ORL     AUXR,   #08H            //T2_C/T=1, count on external pulse input from T2(P3.1) pin

        MOV     T2L,    #LOW F38_4KHz           //Initial timing value
        MOV     T2H,    #HIGH F38_4KHz
        ORL     AUXR,   #10H
        MOV     INT_CLKO,   #04H

        SJMP    $

;----------------------------------------

        END
```

STC MCU Limited.

2.1.3.6 Timer 3 Programmable Clock Output and Demo Program (C and ASM)

Internal Structure Diagram of Timer 3 is shown below:

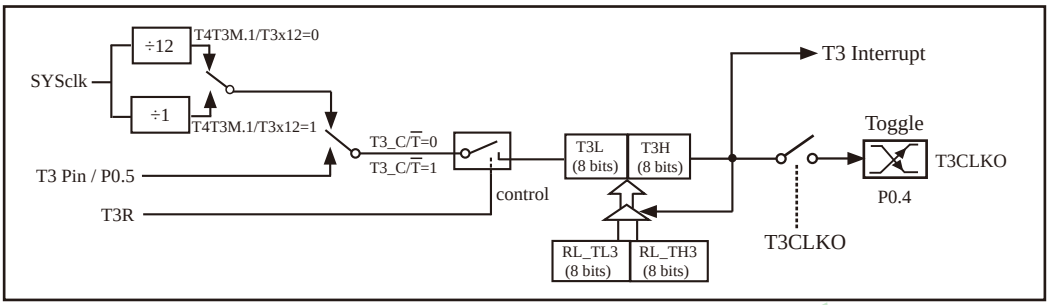

Timer / Counter 3 Operating Mode : 16 bit auto-reloadable Mode

How to output clock by using T3CLKO/P0.4.

The clock output of T3CLKO/P0.4 is controlled by the bit T3CLKO of register T4T3M.

T4T3M.0 - T3CLKO : 1, enable clock output
0, disable clock output

The ouput clock frequency of T3CLKO is controlled by Timer 3. When it is used as programmable clcok output, Timer 3 interrupt don't be enabled to avoid CPU entering interrupt repeatly unless special circumstances.

T4T3M(Address:D1H)

When T3CLKO/T4T3M.0=1, P0.4 is configured for Timer 3 programmable clock output T3CLKO.

The clock output frequency = T3 overflow/2

If T3_ $C/\overline{T}$ = 0, namely Timer/Counter 3 count on the internal system clock,

When T3 in 1T mode (T4T3.1/T3x12=1), the output frequency = (SYSclk)/(65536-[RL_TH3, RL_TL3])/2

When T3 in 12T mode (T4T3.1/T3x12=0), the output frequency = (SYSclk) /12/ (65536-[RL_TH3, RL_TL3])/2

If T3_ $C/\overline{T}$ = 1, namely Timer/Counter 3 count on the external pulse input from P0.5/T3,

the output frequency = (T3_Pin_CLK) / (65536-[RL_TH3, RL_TL3])/2

RL_TH3 is the reloaded register of **T3H, RL_TL3** is the reload register of T3L.

STC MCU Limited.

2.1.3.7 Timer 4 Programmable Clock Output and Demo Program (C and ASM)

Internal Structure Diagram of Timer 4 is shown below:

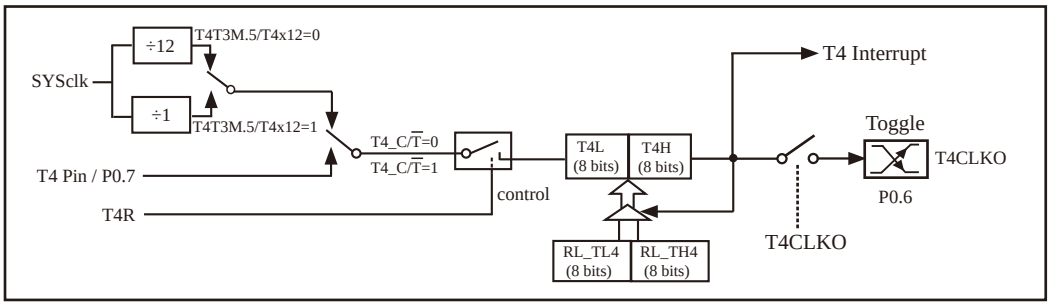

Timer / Counter 4 Operating Mode : 16 bit auto-reloadable Mode

How to output clock by using T4CLKO/P0.6.

The clock output of T4CLKO/P0.6 is controlled by the bit T4CLKO of register T4T3M.

T4T3M.4 - T4CLKO : 1, enable clock output
0, disable clock output

The ouput clock frequency of T4CLKO is controlled by Timer 4. When it is used as programmable clcok output, Timer 4 interrupt don't be enabled to avoid CPU entering interrupt repeatly unless special circumstances.

T4T3M(Address:D1H)

When T4CLKO/T4T3M.4=1, P0.6 is configured for Timer 4 programmable clock output T4CLKO.

The clock output frequency = T4 overflow/2

If T4_ C/$\overline{T}$ = 0, namely Timer/Counter 4 count on the internal system clock,

When T4 in 1T mode (T4T3.5/T4x12=1), the output frequency = (SYSclk)/(65536-[RL_TH4, RL_TL4])/2

When T4 in 12T mode (T4T3.5/T4x12=0), the output frequency = (SYSclk) /12/ (65536-[RL_TH4, RL_TL4])/2

If T4_C/$\overline{T}$ = 1, namely Timer/Counter 4 count on the external pulse input from P0.7/T4,

the output frequency = (T4_Pin_CLK) / (65536-[RL_TH4, RL_TL4])/2

RL_TH4 is the reloaded register of **T4H, RL_TL4** is the reload register of T4L.

STC MCU Limited.

2.2 RESET Sources

There are 7 reset sources to generate a reset in STC15 series MCU. They are external RST pin reset, software reset, On-chip power-off / power-on reset(if delay 180mS after power-off / power-on reset, the reset mode is On-chip MAX810 special reset which actully add 180mS delay after power-off / power-on reset), internal low-voltage detection reset, MAX810 special circuit reset, Watch-Dog-Timer reset and the reset caused by illegal use of program address.

2.2.1 External RST pin Reset

The reset pin of STC15F101W series MCU is on RST/P3.4, but the pin of the other STC15 series is on RST/P5.4. Now take RST/P5.4 for example to introducing the external RST pin reset.

External RST pin reset accomplishes the MCU reset by forcing a reset pulse to RST pin from external. The P5.4/RST pin at factory is as I/O port (default). If users need to configure it as reset function pin , they may enable the corresponding option in STC-ISP Writter/Programmer shown the following figure. If P5.4/RST pin has been configured as external reset pin, it will be as reset function pin which is the input to Schmitt Trigger and input pin for chip reset. Asserting an active-high signal and keeping at least 24 cycles plus 20us on the RST pin generates a reset. If the signal on RST pin changed active-low level, MCU will end the reset state and set the bit SWBS/IAP_CONTR.6 and start to run from the system ISP monitor program area. External RST pin reset is hard reset of warm boot.

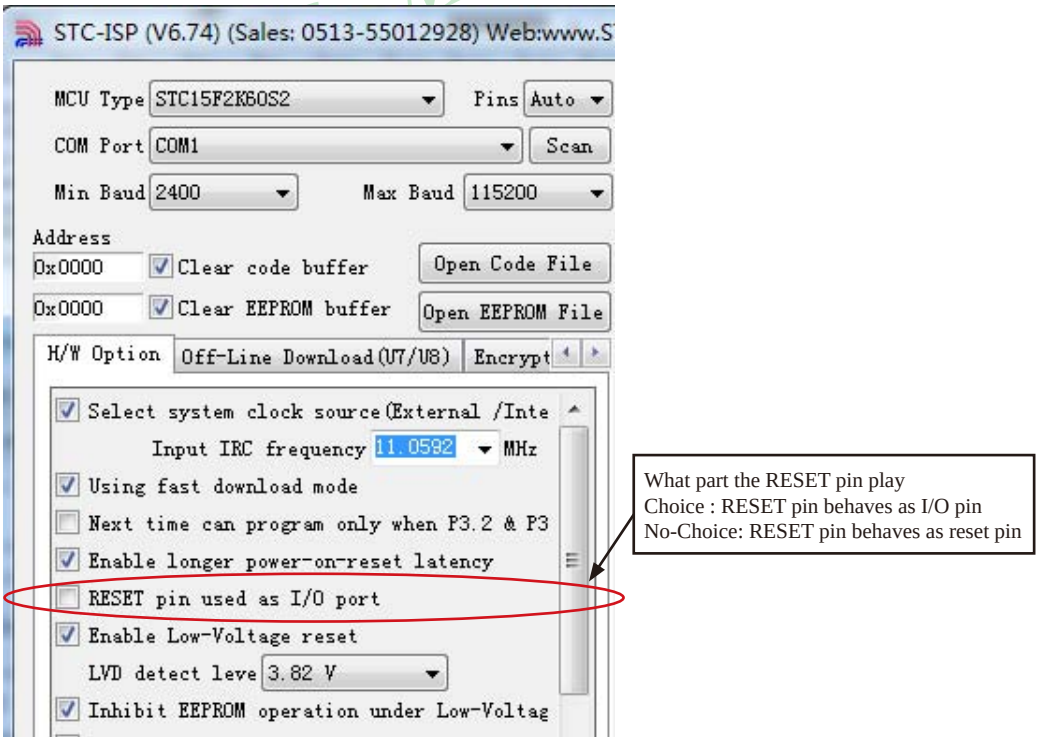

2.2.2 Software Reset and Demo Program (C and ASM)

Users may need to achieve MCU system soft reset (one of the soft reset of warm boot reset) in the running process of user application program sometimes. Due to the hardware of traditional does not support this feature, the user must use software to realize with more trouble. Now to achieve the function, the register IAP_CONTR is added according to the requirement of customer in STC new series. Users only need to control the two bits SWBS/SWRST in register IAP_CONTR. Writing an "1" to SWRST bit in IAP_CONTR register will generate a internal reset. SWBS bit decide where the program strat to run from after reset.

IAP_CONTR: ISP/IAP Control Register

SFR Name	SFR Address	bit	B7	B6	B5	B4	B3	B2	B1	B0
IAP_CONTR	C7H	name	IAPEN	SWBS	SWRST	CMD_FAIL	-	WT2	WT1	WT0

IAPEN : ISP/IAP operation enable.

0 : Global disable all ISP/IAP program/erase/read function.

1 : Enable ISP/IAP program/erase/read function.

SWBS: software boot selection control bit

0 : Boot from main-memory after reset.

1 : Boot from ISP memory after reset.

SWRST: software reset trigger control.

0 : No operation

1 : Generate software system reset. It will be cleared by hardware automatically.

CMD_FAIL: Command Fail indication for ISP/IAP operation.

0 : The last ISP/IAP command has finished successfully.

1 : The last ISP/IAP command fails. It could be caused since the access of flash memory was inhibited.

STC MCU Limited.

```
;Software reset from user appliction program area (AP area) and switch to AP area to run program
MOV IAP_CONTR, #00100000B ;SWBS = 0(Select AP area), SWRST = 1(Software reset)
;Software reset from system ISP monitor program area (ISP area) and switch to AP area to run program
MOV IAP_CONTR, #00100000B ;SWBS = 0(Select AP area), SWRST = 1(Software reset)
;Software reset from user appliction program area (AP area) and switch to ISP area to run program
MOV IAP_CONTR, #01100000B ;SWBS = 1(Select ISP area), SWRST = 1(Software reset)
;Software reset from system ISP monitor program area (ISP area) and switch to ISP area to run program
MOV IAP_CONTR, #01100000B ;SWBS = 1(Select ISP area), SWRST = 1(Software reset)
```

This reset is to reset the whole system, all special function registers and I/O prots will be reset to the initial value

1. C Program Listing

```
/*---------------------------------------------------------------------------------------------------*/
/* --- STC MCU  Limited. ---------------------------------------------------------------------------*/
/* --- Exam Program of software reset --------------------------------------------------------------*/
/* --- Mobile: (86)13922805190 ---------------------------------------------------------------------*/
/* --- Fax: 86-755-82905966 ------------------------------------------------------------------------*/
/* --- Tel: 86-755-82948412 ------------------------------------------------------------------------*/
/* --- Web: www.STCMCU.com -------------------------------------------------------------------------*/
/* If you want to use the program or the program referenced in the  ----------------------------*/
/* article, please specify in which data and procedures from STC    ----------------------------*/
/*---- In Keil C development environment, select the Intel 8052 to compiling ------------------*/
/*----  And only contain < reg51.h > as header file ---------------------------------------------*/
/*---------------------------------------------------------------------------------------------------*/

//suppose the frequency of test chip is 18.432MHz

#include "reg51.h"
#include "intrins.h"

//-----------------------------------------------
sfr         IAP_CONTR   =    0xc7;              //IAP Control register

sbit        P10         =            P1^0;
//-----------------------------------------------

void delay()                                    //software delay
{
            int i;

            for (i=0; i<10000; i++)
            {
                        _nop_();
                        _nop_();
                        _nop_();
                        _nop_();
            }
}
void main()
{
            P10 = !P10;
            delay();
            P10 = !P10;
            delay();

            IAP_CONTR = 0x20;           //softwate reset, strat to run from user appliction program area
//          IAP_CONTR = 0x60;           //softwate reset, strat to run from system ISP monitor program area

            while (1);
}
```

STC MCU Limited.

2. Assembler Listing

```
/*---------------------------------------------------------------------------------------------------*/
/* --- STC MCU  Limited. ---------------------------------------------------------------------------*/
/* --- Exam Program of software reset --------------------------------------------------------------*/
/* --- Mobile: (86)13922805190 ---------------------------------------------------------------------*/
/* --- Fax: 86-755-82905966 ------------------------------------------------------------------------*/
/* --- Tel: 86-755-82948412 ------------------------------------------------------------------------*/
/* --- Web: www.STCMCU.com -------------------------------------------------------------------------*/
/* If you want to use the program or the program referenced in the  ----------------------------*/
/* article, please specify in which data and procedures from STC    ----------------------------*/
/*---- In Keil C development environment, select the Intel 8052 to compiling ------------------*/
/*----  And only contain < reg51.h > as header file ------------------------------------------------*/
/*---------------------------------------------------------------------------------------------------*/

//suppose the frequency of test chip is 18.432MHz

IAP_CONTR       DATA    0C7H
//-----------------------------------------
        ORG     0000H
        LJMP    MAIN
//-----------------------------------------
        ORG     0100H
MAIN:
        MOV     SP,     #3FH

        CPL     P1.0
        LCALL   DELAY
        CPL     P1.0
        LCALL   DELAY

        MOV     IAP_CONTR,      #20H            //softwate reset,
                                                //strat to run from user appliction program area
//      MOV     IAP_CONTR,      #60H            //softwate reset,
                                                //strat to run from system ISP monitor program area

        JMP     $
;---------------------------------------------
DELAY:
        MOV     R0,     #0                      //software delay
        MOV     R1,     #0
WAIT:
        DJNZ    R0,     WAIT
        DJNZ    R1,     WAIT
        RET
;---------------------------------------------
        END
```

STC MCU Limited.

2.2.3 Power-Off / Power-On Reset (POR)

When VCC drops below the detection threshold of POR circuit, all of the logic circuits are reset.
When VCC goes back up again, an internal reset is released automatically after a delay of 32768 clocks. After power-off / power-on reset, MCU will set the bit SWBS/IAP_CONTR.6 and start to run from the system ISP monitor program area. power-off / power-on reset is one of cold boot reset.

The nominal POR detection threshold is around 1.8V for 3.3V device and 3.2V for 5V device.

The Power-Off / Power-On flag, POF/PCON.4, is set by hardware to denote the VCC power has ever been less than the POR voltage. And, it helps users to check if the start of running of the CPU is from power-on or from hardware reset (such as RST-pin reset), software reset or Watchdog Timer reset. The POF bit should be cleared by software.

2.2.4 MAX810 Speical Circuit Reset (Power-Off/ Power-On Reset Delay)

There is another on-chip POR delay circuit s integrated on STC15 series MCU. This circuit is MAX810—sepcial reset circuit and is controlled by configuring STC-ISP Writter/Programmer shown in the next figure. MAX810 special reset circuit just generate about 180mS extra reset-delay-time after power-off / power-on reset. So it is another power-off / power-on reset. After the reset is released, MCU will set the bit SWBS/IAP_CONTR.6 and start to run from the system ISP monitor program area. MAX810 special circuit reset is one of cold boot reset.

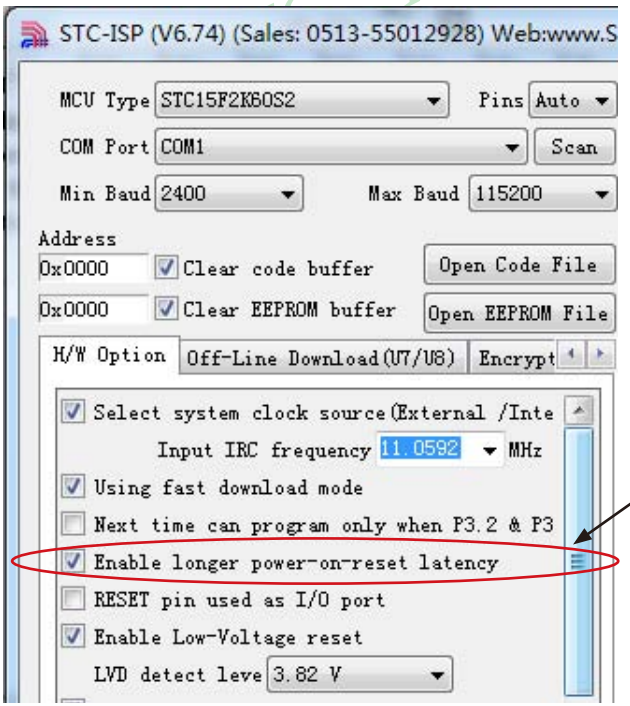

Power-on reset, whether need the extra power-on delay or not
Choice: Yes, need the extra power-on delay
No-Choice: No, use the general power-on delay

2.2.5 Internal Low Voltage Detection Reset

Besides the POR voltage, there is a higher threshold voltage: the Low Voltage Detection (LVD) voltage for STC15 series MCU. If user have enabled low-voltage reset in STC-ISP Writer/Programmer, it will generate a reset when the VCC power drops down to the LVD voltage. And the Low voltage Flag, LVDF bit (PCON.5), will be set by hardware simultaneously. (Note that during power-on, this flag will also be set, and the user should clear it by software for the following Low Voltage detecting.) Internal low-voltage detection reset don't set the bit SWBS/IAP_CONTR.6. If the bit SWBS/IAP_CONTR.6 has been set as 0 before reset, MCU will start to run from the user application program area after reset. If the bit SWBS/IAP_CONTR.6 has been set as 1 before reset, MCU will start to run from the system ISP monitor program area after reset on the contray. Internal low-voltage detection reset is one of hard reset of warm boot.

The threshold voltage of STC15 series built-in low voltage detection reset is optional in STC-ISP Writer/ Programmer. see the following figure.

The detection voltage of 5V MCU of STC15 series is optional:

-40℃	25℃	85℃
4.74	4.64	4.60
4.41	4.32	4.27
4.14	4.05	4.00
3.90	3.82	3.77
3.69	3.61	3.56
3.51	3.43	3.38
3.36	3.28	3.23
3.21	3.14	3.09

STC MCU Limited.

When the internal clock frequency is higher than 20MHz in normal temperature, low-voltage detection threshold voltage is recommended to choose more than 4.32V for 5V chip.

When the internal clock frequency is lower than 12MHz in normal temperature, low-voltage detection threshold voltage is recommended to choose less than 3.82V for 5V chip.

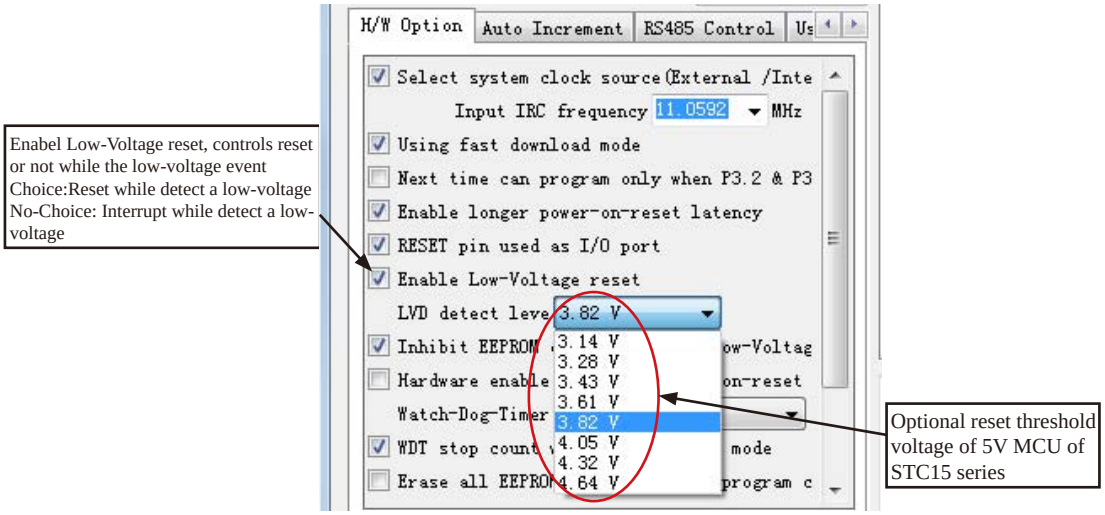

The detection voltage of 3V MCU of STC15 series is optional:

-40℃	25℃	85℃
3.11	3.08	3.09
2.85	2.82	2.83
2.63	2.61	2.61
2.44	2.42	2.43
2.29	2.26	2.26
2.14	2.12	2.12
2.01	2.00	2.00
1.90	1.89	1.89

When the internal clock frequency is higher than 20MHz in normal temperature, low-voltage detection threshold voltage is recommended to choose more than 2.82V for 3V chip.

When the internal clock frequency is lower than 12MHz in normal temperature, low-voltage detection threshold voltage is recommended to choose less than 2.42V for 3V chip.

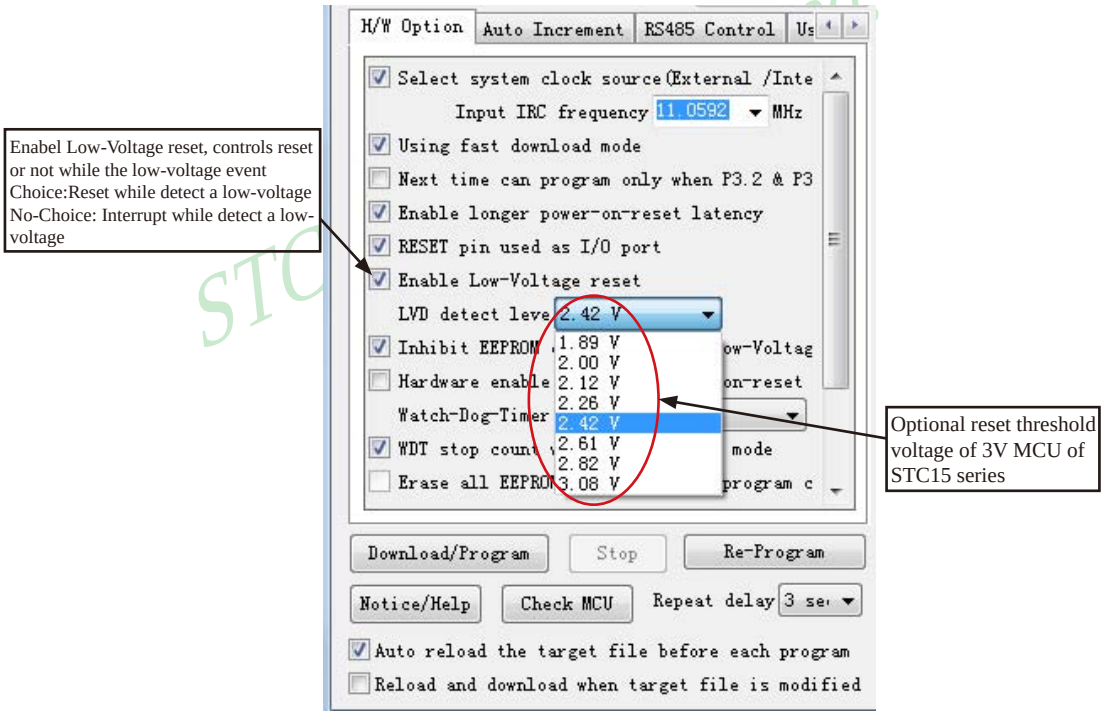

If low-voltage detection reset is not be enabled , in other words, low-voltage detection interrupt is enabed in STC-ISP Writer/Programmer, it will generate a interrupt when the VCC power drops down to the LVD voltage. And the Low voltage Flag, LVDF bit (PCON.5), will be set by hardware simultaneously.

The low voltage detection threshold voltage of STC15 series also is optional in STC-ISP Writer/Programmer. see the above figure too.

If internal low voltage detection interrupt function is needed to continue normal operation during stop/power-down mode, it can be used to wake up MCU from stop/power-down mode.

Don't enable EEPROM/IAP function when the operation voltage is too low. Namely, select the option "Inhibit EEPROM operation under Low-Voltage" in STC-ISP Writer/Programmer

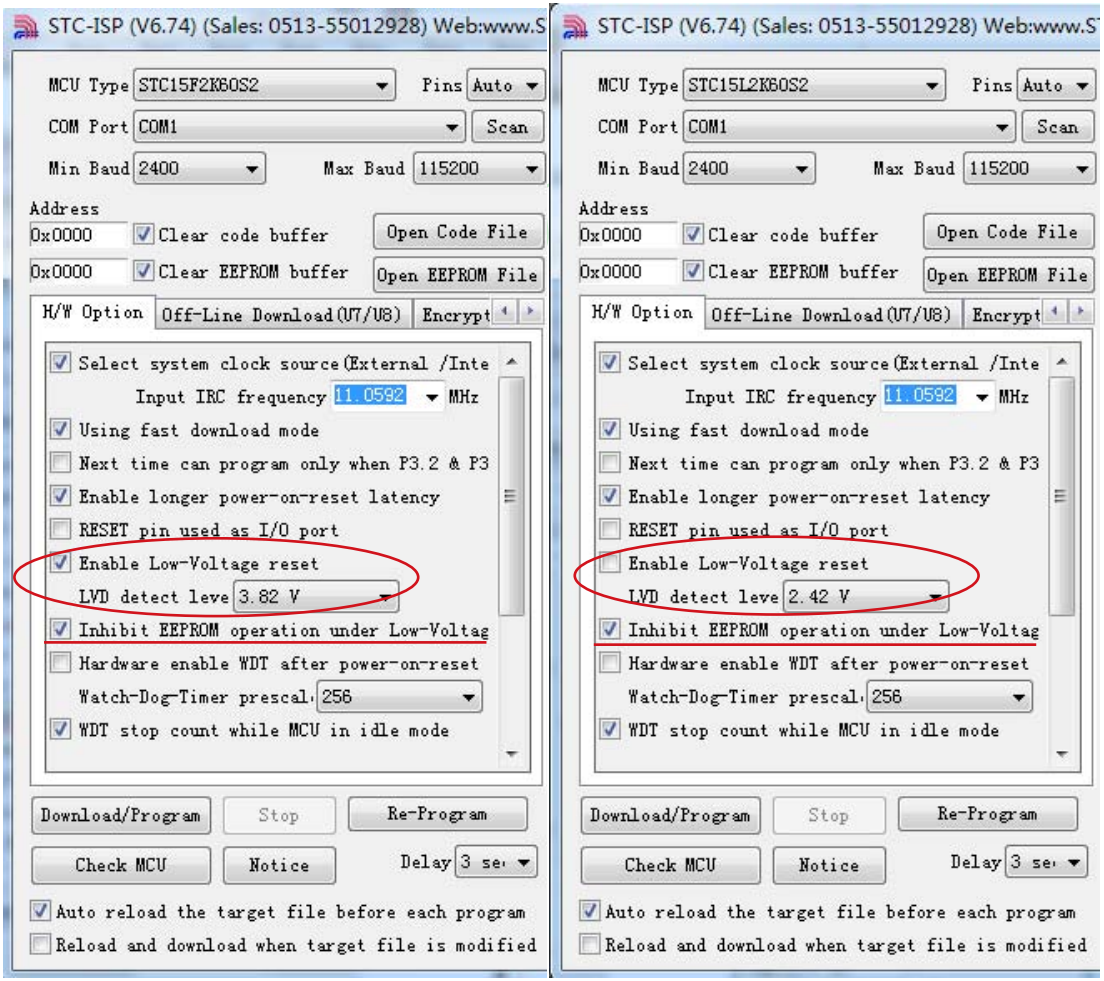

Some SFRs related to Low voltage detection as shown below.

PCON register (Power Control Register)

SFR name	Address	bit	B7	B6	B5	B4	B3	B2	B1	B0
PCON	87H	name	SMOD	SMOD0	LVDF	POF	GF1	GF0	PD	IDL

LVDF : Pin Low-Voltage Flag. Once low voltage condition is detected (VCC power is lower than LVD voltage), it is set by hardware (and should be cleared by software).

IE: Interrupt Enable Rsgister

SFR name	Address	bit	B7	B6	B5	B4	B3	B2	B1	B0
IE	A8H	name	EA	ELVD	EADC	ES	ET1	EX1	ET0	EX0

Enable Bit = 1 enables the interrupt .
Enable Bit = 0 disables it .

EA (IE.7): disables all interrupts. if EA = 0,no interrupt will be acknowledged. if EA = 1, each interrupt source is individually enabled or disabled by setting or clearing its enable bit.

ELVD (IE.6): Low volatge detection interrupt enable bit.

IP: Interrupt Priority Register

SFR name	Address	bit	B7	B6	B5	B4	B3	B2	B1	B0
IE	B8H	name	PPCA	PLVD	PADC	PS	PT1	PX1	PT0	PX0

PLVD : Low voltage detection interrupt priority control bits.
PLVD=0, Low voltage detection interrupt is assigned low priority.
PLVD=1, Low voltage detection interrupt is assigned high priority.

STC MCU Limited.

2.2.6 Watch-Dog-Timer Reset

The watch dog timer in STC15 series MCU consists of an 8-bit pre-scaler timer and an 15-bit timer. The timer is one-time enabled by setting EN_WDT(WDT_CONTR.5). Clearing EN_WDT can stop WDT counting. When the WDT is enabled, software should always reset the timer by writing 1 to CLR_WDT bit before the WDT overflows. If STC15F2K60S2 series MCU is out of control by any disturbance, that means the CPU can not run the software normally, then WDT may miss the "writting 1 to CLR_WDT" and overflow will come. An overflow of Watch-Dog-Timer will generate a internal reset.

Watch-Dog Timer (WDT) reset don't set the bit SWBS/IAP_CONTR.6. If the bit SWBS/IAP_CONTR.6 has been set as 0 before reset, MCU will start to run from the user application program area after reset. If the bit SWBS/IAP_CONTR.6 has been set as 1 before reset, MCU will start to run from the system ISP monitor program area after reset on the contray. WDT reset is one of soft reset of warm boot.

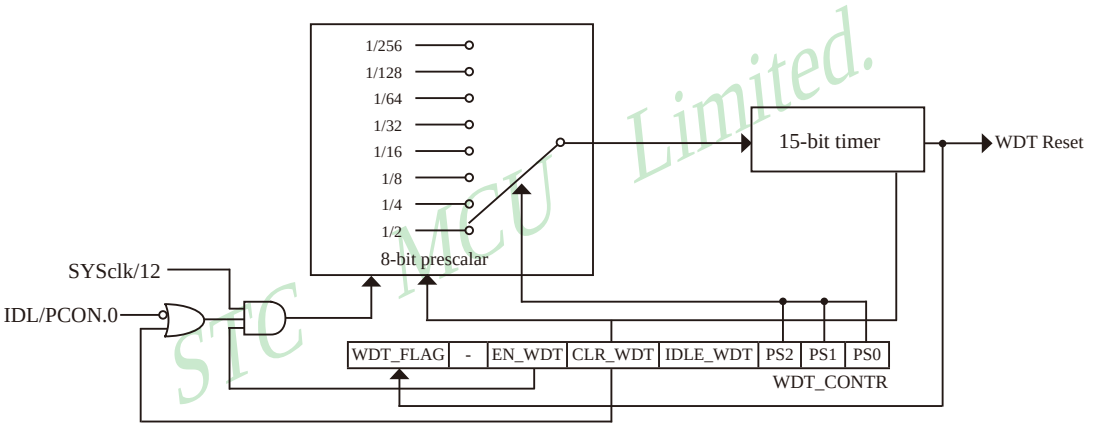

WDT Structure

WDT_CONTR: Watch-Dog-Timer Control Register

SFR name	Address	bit	B7	B6	B5	B4	B3	B2	B1	B0
WDT_CONTR	0C1H	name	WDT_FLAG	-	EN_WDT	CLR_WDT	IDLE_WDT	PS2	PS1	PS0

WDT_FLAG : WDT reset flag.
0 : This bit should be cleared by software.
1 : When WDT overflows, this bit is set by hardware to indicate a WDT reset happened.

EN_WDT : Enable WDT bit. When set, WDT is started.

CLR_WDT : WDT clear bit. When set, WDT will recount. Hardware will automatically clear this bit.

IDLE_WDT : WDT IDLE mode bit. When set, WDT is enabled in IDLE mode. When clear, WDT is disabled in IDLE.

PS2, PS1, PS0: WDT Pre-scale value set bit.

Pre-scale value of Watchdog timer is shown as the bellowed table :

PS2	PS1	PS0	Pre-scale	WDT overflow Time @20MHz
0	0	0	2	39.3 mS
0	0	1	4	78.6 mS
0	1	0	8	157.3 mS
0	1	1	16	314.6 mS
1	0	0	32	629.1 mS
1	0	1	64	1.25 S
1	1	0	128	2.5 S
1	1	1	256	5 S

The WDT overflow time is determined by the following equation:

WDT overflow time = (12 × Pre-scale × 32768) / SYSclk

The SYSclk is 20MHz in the table above.

If SYSclk is 12MHz, The WDT overflow time is :

WDT overflow time = (12 × Pre-scale × 32768) / 12000000 = Pre-scale× 393216 / 12000000

WDT overflow time is shown as the bellowed table when SYSclk is 12MHz:

PS2	PS1	PS0	Pre-scale	WDT overflow Time @12MHz
0	0	0	2	65.5 mS
0	0	1	4	131.0 mS
0	1	0	8	262.1 mS
0	1	1	16	524.2 mS
1	0	0	32	1.0485 S
1	0	1	64	2.0971 S
1	1	0	128	4.1943 S
1	1	1	256	8.3886 S

If SYSclk is 11.0592MHz, The WDT overflow time is :

WDT overflow time = (12 × Pre-scale × 32768) / 11059200 = Pre-scale× 393216 / 11059200

WDT overflow time is shown as the bellowed table when SYSclk is 11.0592MHz:

PS2	PS1	PS0	Pre-scale	WDT overflow Time @11.0592MHz
0	0	0	2	71.1 mS
0	0	1	4	142.2 mS
0	1	0	8	284.4 mS
0	1	1	16	568.8 mS
1	0	0	32	1.1377 S
1	0	1	64	2.2755 S
1	1	0	128	4.5511 S
1	1	1	256	9.1022 S

STC MCU Limited.

Options related with WDT in STC-ISP Writter/Programmer is shown in the following figure

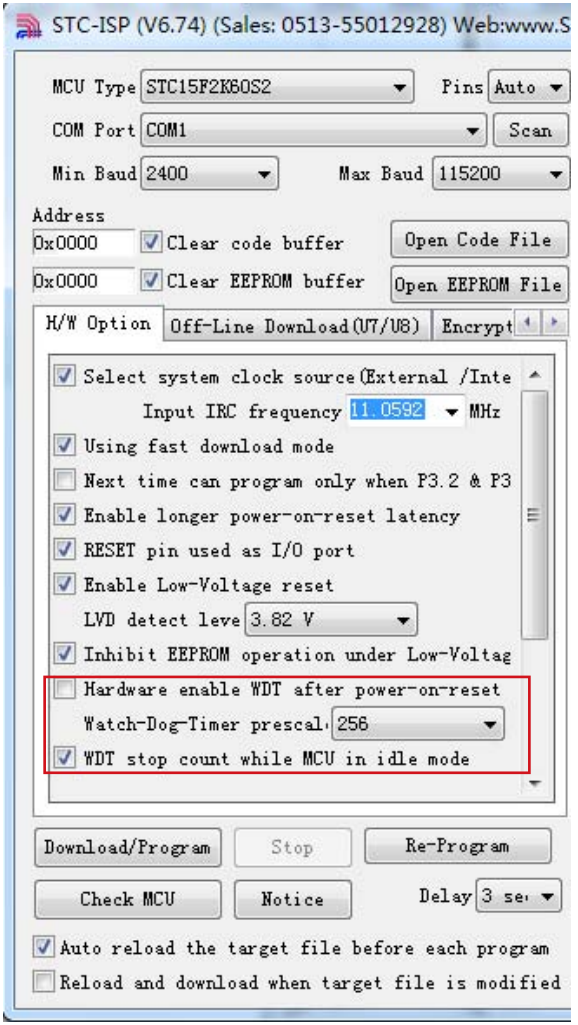

Limited.

The following example is a assembly language program that demonstrates STC 1T Series MCU WDT.

```
;/*-------------------------------------------------------------------------------------------------*/
;/* --- STC MCU International Limited ---------------------------------------------------------*/
;/* --- STC 1T Series MCU WDT Demo ------------------------------------------------------------*/
;/* --- Mobile: (86)13922805190 ---------------------------------------------------------------*/
;/* --- Fax: 86-755-82905966 ------------------------------------------------------------------*/
;/* --- Tel: 86-755-82948412 ------------------------------------------------------------------*/
;/* --- Web: www.STCMCU.com -------------------------------------------------------------------*/
;/* If you want to use the program or the program referenced in the  ----------------------------*/
;/* article, please specify in which data and procedures from STC    ----------------------------*/
/*---- In Keil C development environment, select the Intel 8052 to compiling ------------------*/
/*----  And only contain < reg51.h > as header file ------------------------------------------------*/
;/*-------------------------------------------------------------------------------------------------*/


; WDT overflow time = (12 × Pre-scale × 32768) / SYSclk
WDT_CONTR               EQU     0C1H            ;WDT address
WDT_TIME_LED            EQU     P1.5            ;WDT overflow time LED on P1.5
                                                ;The WDT overflow time may be measured by the LED light time
WDT_FLAG_LED            EQU     P1.7
                                                ;WDT overflow reset flag LED indicator on P1.7
Last_WDT_Time_LED_Status        EQU     00H
                        ;bit variable used to save the last stauts of WDT overflow time LED indicator


;WDT reset time , the SYSclk is 18.432MHz
;Pre_scale_Word  EQU     00111100B       ;open WDT, Pre-scale value is 32, WDT overflow time=0.68S
;Pre_scale_Word  EQU     00111101B       ;open WDT, Pre-scale value is 64, WDT overflow time=1.36S
;Pre_scale_Word  EQU     00111110B       ;open WDT, Pre-scale value is 128, WDT overflow time=2.72S
;Pre_scale_Word  EQU     00111111B       ;open WDT, Pre-scale value is 256, WDT overflow time=5.44S

                ORG     0000H
                AJMP    MAIN
                ORG     0100H
MAIN:
                MOV     A,      WDT_CONTR               ;detection if WDT reset
                ANL     A,      #10000000B
                JNZ     WDT_Reset
                        ;WDT_CONTR.7=1, WDT reset, jump WDT reset subroutine
                        ;WDT_CONTR.7=0, Power-On reset, cold start-up, the content of RAM is  random
                SETB    Last_WDT_Time_LED_Status        ;Power-On reset
                CLR     WDT_TIME_LED            ;Power-On reset,open WDT overflow time LED
                MOV     WDT_CONTR,      #Pre_scale_Word         ;open WDT
```

STC MCU Limited.

```
WAIT1:
        SJMP    WAIT1                   ;wait WDT overflow reset
    ;WDT_CONTR.7=1, WDT reset, hot strart-up, the content of RAM is constant and just like before reset
WDT_Reset:
        CLR     WDT_FLAG_LED
                                        ;WDT reset,open WDT overflow reset flag LED indicator
        JB      Last_WDT_Time_LED_Status,       Power_Off_WDT_TIME_LED
        ;when set Last_WDT_Time_LED_Status, close the  corresponding LED indicator
        ;clear, open the  corresponding LED indicator
        ;set WDT_TIME_LED according to the last status of WDT overflow time LED indicator
        CLR     WDT_TIME_LED            ;close the WDT overflow time LED indicator
        CPL     Last_WDT_Time_LED_Statu
                                        ;reverse the last status of WDT overflow time LED indicator

WAIT2:
        SJMP    WAIT2                   ;wait WDT overflow reset
Power_Off_WDT_TIME_LED:
        SETB    WDT_TIME_LED            ;close the WDT overflow time LED indicator
        CPL     Last_WDT_Time_LED_Status
                                        ;reverse the last status of WDT overflow time LED indicator
WAIT3:
        SJMP    WAIT3                   ;wait WDT overflow reset
        END
```

STC MCU Limited

2.2.7 Reset Caused by Illegal use of Program Address

It will generate a reset if the address that program counter point to is outside of the valid program space. That is a reset caused by illegal use of program address. this reset don't set the bit SWBS/IAP_CONTR.6. If the bit SWBS/IAP_CONTR.6 has been set as 0 before reset, MCU will start to run from the user application program area after reset. If the bit SWBS/IAP_CONTR.6 has been set as 1 before reset, MCU will start to run from the system ISP monitor program area after reset on the contray. Reset caused by illegal use of program address is one of soft reset of warm boot.

2.2.8 Warm Boot and Cold Boot Reset

Reset type		Reset source		Result	The value of SWBS/ IAP_CONTR.6 after reset
Warm boot	Soft reset	Software Reset	20H → IAP_CONTR	System will reset to AP address 0000H and begin running user application program	0
			60H → IAP_CONTR	System will reset to ISP address 0000H and begin running ISP monitor program, if not detected legitimate ISP command, system will software reset to the user program area automatically.	1
		Watch-Dog-Timer Reset	If the value of SWBS/ IAP_CONTR.6 is 0 before reset	System will reset to AP address 0000H and begin running user application program	0
			If the value of SWBS/ IAP_CONTR.6 is 1 before reset	System will reset to ISP address 0000H and begin running ISP monitor program, if not detected legitimate ISP command, system will software reset to the user program area automatically.	1
		Reset caused by illegal use of program address	If the value of SWBS/ IAP_CONTR.6 is 0 before reset	System will reset to AP address 0000H and begin running user application program	0
			If the value of SWBS/ IAP_CONTR.6 is 1 before reset	System will reset to ISP address 0000H and begin running ISP monitor program, if not detected legitimate ISP command, system will software reset to the user program area automatically.	1
	Hard reset	Internal Low-Voltage Detection Reset	If the value of SWBS/ IAP_CONTR.6 is 0 before reset	System will reset to AP address 0000H and begin running user application program	0
			If the value of SWBS/ IAP_CONTR.6 is 1 before reset	System will reset to ISP address 0000H and begin running ISP monitor program, if not detected legitimate ISP command, system will software reset to the user program area automatically.	1
		External RST Pin Reset		System will reset to ISP address 0000H and begin running ISP monitor program, if not detected legitimate ISP command, system will software reset to the user program area automatically.	1
Cold boot	Cold boot reset namely Power-Off / Power-On Reset caused by the power of system be off or on			System will reset to ISP address 0000H and begin running ISP monitor program, if not detected legitimate ISP command, system will software reset to the user program area automatically.	1

STC MCU Limited.

IAP_CONTR: ISP/IAP Control Register

SFR Name	SFR Address	bit	B7	B6	B5	B4	B3	B2	B1	B0
IAP_CONTR	C7H	name	IAPEN	SWBS	SWRST	CMD_FAIL	-	WT2	WT1	WT0

SWBS: software boot selection control bit

0 : Boot from main-memory after reset.

1 : Boot from ISP memory after reset.

SWRST: software reset trigger control.

0 : No operation

1 : Generate software system reset. It will be cleared by hardware automatically.

2.3 Power Management Modes

The STC15 series core has three software programmable power management mode: slow-down, idle and stop/power-down mode. The power consumption of STC15F2K60S2 series is about 2.7mA~7mA in normal operation, while it is lower than 0.1uA in stop/power-down mode and 1.8mA in idle mode.

Slow-down mode is controlled by clock divider register CLK_DIV (PCON2). Idle and stop/power-down is managed by the corresponding bit in Power control (PCON) register which is shown in below.

PCON register (Power Control Register)

SFR name	Address	bit	B7	B6	B5	B4	B3	B2	B1	B0
PCON	87H	name	SMOD	SMOD0	LVDF	POF	GF1	GF0	PD	IDL

SMOD : Double baud rate of UART interface

0 Keep normal baud rate when the UART is used in mode 1,2 or 3.

1 Double baud rate bit when the UART is used in mode 1,2 or 3.

SMOD0 : SM0/FE bit select for SCON.7; setting this bit will set SCON.7 as Frame Error function. Clearing it to set SCON.7 as one bit of UART mode selection bits.

LVDF : Pin Low-Voltage Flag. Once low voltage condition is detected (VCC power is lower than LVD voltage), it is set by hardware (and should be cleared by software).

POF : Power-On flag. It is set by power-off-on action and can only cleared by software.

Practical application: if it is wanted to know which reset the MCU is used, see the following figure.

STC MCU Limited.

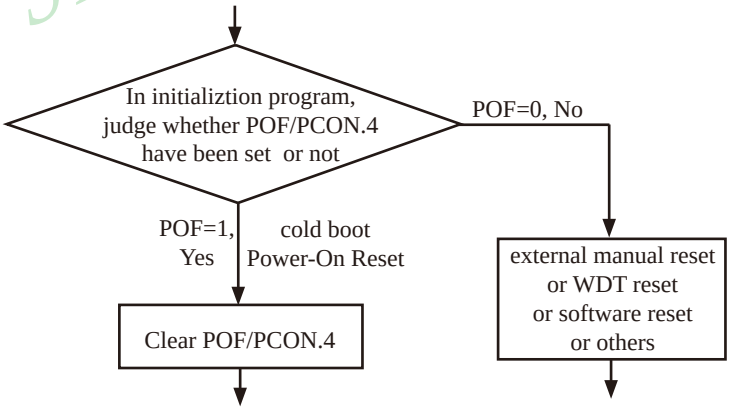

GF1,GF0: General-purposed flag 1 and 0

PD : Stop Mode/Power-Down Select bit..
Setting this bit will place the STC15 series MCU in Stop/Power-Down mode. Stop/Power-Down mode can be waked up by external interrupt. Because the MCU' s internal oscillator stopped in Stop/Power-Down mode, CPU, Timers, UARTs and so on stop to run, only external interrupt go on to work. The following pins can wake up MCU from Stop/Power-Down mode: INT0/P3.2, INT1/P3.3, $\overline{\text{INT2}}$/P3.6, $\overline{\text{INT3}}$/P3.7, $\overline{\text{INT4}}$/P3.0; pins CCP0/CCP1/CCP2/CCP3/CCP4/CCP5; pins RxD/RxD2/RxD3/RxD4; pins T0/T1/T2/T3/T4; Internal power-down wake-up Timer.

IDL : Idle mode select bit.
Setting this bit will place the STC15 series in Idle mode. only CPU goes into Idle mode. (Shuts off clock to CPU, but clock to Timers, Interrupts, Serial Ports, and Analog Peripherals are still active.) External Interrupts, Timer interrupts, low-voltage detection interrupt and ADC interrupt all can wake up MCU from Idle mode.

STC MCU Limited.

2.3.1 Slow Down Mode and Demo Program (C and ASM)

A divider is designed to slow down the clock source prior to route to all logic circuit. The operating frequency of internal logic circuit can therefore be slowed down dynamically , and then save the power.

User can slow down the MCU by means of writing a non-zero value to the CLKS[2:0] bits in the CLK_DIV register. This feature is especially useful to save power consumption in idle mode as long as the user changes the CLKS[2:0] to a non-zero value before entering the idle mode.

Clock Division Register CLK_DIV (PCON2):

SFR Name	SFR Address	bit	B7	B6	B5	B4	B3	B2	B1	B0
CLK_DIV (PCON2)	97H	name	MCKO_S1	MCKO_S0	ADRJ	Tx_Rx	MCLKO_2	CLKS2	CLKS1	CLKS0

CLKS2	CLKS1	CLKS0	the control bit of system clock (System clock refers to the master clock that has been divided frequency, which is offered to CPU, UARTs, SPI, Timers, CCP/PWM/PCA and A/D Converter)
0	0	0	Master clock frequency/1, No division
0	0	1	Master clock frequency/2
0	1	0	Master clock frequency/4
0	1	1	Master clock frequency/8
1	0	0	Master clock frequency/16
1	0	1	Master clock frequency/32
1	1	0	Master clock frequency/64
1	1	1	Master clock frequency/128

The master clock can either be internal R/C clock or the external input clock or the external crystal oscillator.

STC MCU Limited.

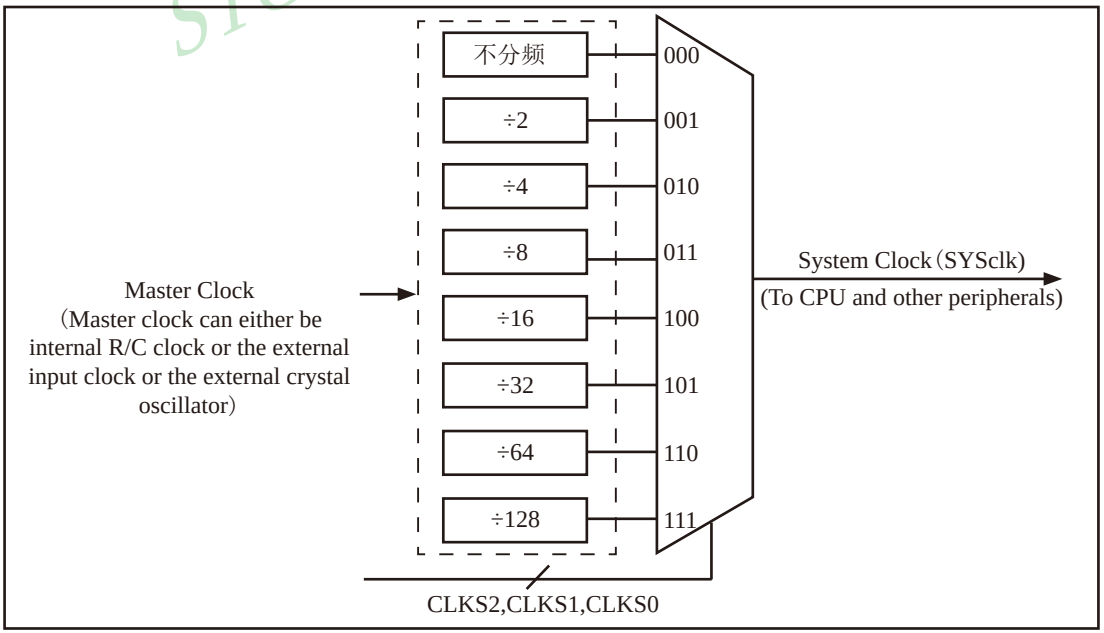

Clock Structure

1. C Program Listing

```
/*---------------------------------------------------------------------------------------------------*/
/* --- STC MCU  Limited. ---------------------------------------------------------------------------*/
/* --- Exam Program of Slow-down mode --------------------------------------------------------------*/
/* --- Mobile: (86)13922805190 ---------------------------------------------------------------------*/
/* --- Fax: 86-755-82905966 ------------------------------------------------------------------------*/
/* --- Tel: 86-755-82948412 ------------------------------------------------------------------------*/
/* --- Web: www.STCMCU.com -------------------------------------------------------------------------*/
/* If you want to use the program or the program referenced in the  ----------------------------*/
/* article, please specify in which data and procedures from STC    ----------------------------*/
/*---- In Keil C development environment, select the Intel 8052 to compiling ----------------*/
/*----  And only contain < reg51.h > as header file ------------------------------------------------*/
/*---------------------------------------------------------------------------------------------------*/

//suppose the frequency of test chip is 18.432MHz

sfr         CLK_DIV     =  0x97;

//---------------------------------------------

void main()
{
            CLK_DIV = 0x00;             //System clock is MCLK (master clock)
//          CLK_DIV = 0x01;             //System clock is MCLK/2
//          CLK_DIV = 0x02;             //System clock is MCLK/4
//          CLK_DIV = 0x03;             //System clock is MCLK/8
//          CLK_DIV = 0x04;             //System clock is MCLK/16
//          CLK_DIV = 0x05;             //System clock is MCLK/32
//          CLK_DIV = 0x06;             //System clock is MCLK/64
//          CLK_DIV = 0x07;             //System clock is MCLK/128

            while (1);
}
```

STC MCU Limited.

2. Assembler Listing

```
/*---------------------------------------------------------------------------------------------------*/
/* --- STC MCU  Limited. ---------------------------------------------------------------------------*/
/* --- Exam Program of Slow-down mode --------------------------------------------------------------*/
/* --- Mobile: (86)13922805190 ---------------------------------------------------------------------*/
/* --- Fax: 86-755-82905966 ------------------------------------------------------------------------*/
/* --- Tel: 86-755-82948412 ------------------------------------------------------------------------*/
/* --- Web: www.STCMCU.com -------------------------------------------------------------------------*/
/* If you want to use the program or the program referenced in the  ----------------------------*/
/* article, please specify in which data and procedures from STC    ----------------------------*/
/*---- In Keil C development environment, select the Intel 8052 to compiling ------------------*/
/*----  And only contain < reg51.h > as header file ------------------------------------------------*/
/*---------------------------------------------------------------------------------------------------*/

//suppose the frequency of test chip is 18.432MHz

CLK_DIV     DATA            097H

//-----------------------------------------
            ORG     0000H
            LJMP    MAIN
//-----------------------------------------

            ORG     0100H
MAIN:
            MOV     SP,     #3FH

            MOV     CLK_DIV,        #0          //System clock is MCLK (master clock)
//          MOV     CLK_DIV,        #1          //System clock is MCLK/2
//          MOV     CLK_DIV,        #2          //System clock is MCLK/4
//          MOV     CLK_DIV,        #3          //System clock is MCLK/8
//          MOV     CLK_DIV,        #4          //System clock is MCLK/16
//          MOV     CLK_DIV,        #5          //System clock is MCLK/32
//          MOV     CLK_DIV,        #6          //System clock is MCLK/64
//          MOV     CLK_DIV,        #7          //System clock is MCLK/128

            SJMP    $

;-----------------------------------------

            END
```

STC MCU Limited.

2.3.2 Idle Mode and Demo Program (C and ASM)

An instruction that sets IDL/PCON.0 causes that to be the last instruction executed before going into the idle mode, the internal clock is gated off to the CPU but not to the interrupt, timer, CCP/PCA/PWM, SPI, ADC, WDT and serial port functions. The PCA can be programmed either to pause or continue operating during Idle. The CPU status is preserved in its entirety: the RAM, Stack Pointer, Program Counter, Program Status Word, Accumulator, and all other registers maintain their data during Idle. The port pins hold the logical states they had at the time Idle was activated. Idle mode leaves the peripherals running in order to allow them to wake up the CPU when an interrupt is generated. Timer 0, Timer 1, CCP/PCA/PWM timer and UARTs will continue to function during Idle mode.

There are two ways to terminate the idle. Activation of any enabled interrupt will cause IDL/PCON.0 to be cleared by hardware, terminating the idle mode. The interrupt will be serviced, and following RETI, the next instruction to be executed will be the one following the instruction that put the device into idle.

The flag bits (GFO and GF1) can be used to give art indication if an interrupt occurred during normal operation or during Idle. For example, an instruction that activates Idle can also set one or both flag bits. When Idle is terminated by an interrupt, the interrupt service routine can examine the flag bits.

The other way to wake-up from idle is to pull RESET high to generate internal hardware reset. Since the clock oscillator is still running, the hardware reset neeeds to be held active for at least 24 clocks plus 20us to complete the reset. After reset, MCU start to run from the system ISP monitor program area.

STC MCU Limited.

1. C Program Listing

```
/*---------------------------------------------------------------------------------------------------*/
/* --- STC MCU  Limited. -------------------------------------------------------------------------*/
/* --- Exam Program of Idle mode -----------------------------------------------------------------*/
/* --- Mobile: (86)13922805190 -------------------------------------------------------------------*/
/* --- Fax: 86-755-82905966 ----------------------------------------------------------------------*/
/* --- Tel: 86-755-82948412 ----------------------------------------------------------------------*/
/* --- Web: www.STCMCU.com -----------------------------------------------------------------------*/
/* If you want to use the program or the program referenced in the  ------------------------------*/
/* article, please specify in which data and procedures from STC    ------------------------------*/
/*---- In Keil C development environment, select the Intel 8052 to compiling ----------------*/
/*----  And only contain < reg51.h > as header file ------------------------------------------------*/
/*---------------------------------------------------------------------------------------------------*/

//suppose the frequency of test chip is 18.432MHz

#include "reg51.h"
#include "intrins.h"

//-----------------------------------------------
```

```
void main()
{
        while (1)
        {
                PCON |= 0x01;                   //set IDL(PCON.0) as 1, MCU in Idle mode
                _nop_();
                _nop_();                        //internal interrupts or external interrupts singnal can
                _nop_();                        //wake up mcu from idle mode
                _nop_();
        }
}
```

2. Assembler Listing

```
/*---------------------------------------------------------------------------------------------------*/
/* --- STC MCU  Limited. ---------------------------------------------------------------------------*/
/* --- Exam Program of Idle mode -------------------------------------------------------------------*/
/* --- Mobile: (86)13922805190 ---------------------------------------------------------------------*/
/* --- Fax: 86-755-82905966 ------------------------------------------------------------------------*/
/* --- Tel: 86-755-82948412 ------------------------------------------------------------------------*/
/* --- Web: www.STCMCU.com -------------------------------------------------------------------------*/
/* If you want to use the program or the program referenced in the  ----------------------------*/
/* article, please specify in which data and procedures from STC    ----------------------------*/
/*---- In Keil C development environment, select the Intel 8052 to compiling ----------------*/
/*----  And only contain < reg51.h > as header file ------------------------------------------------*/
/*---------------------------------------------------------------------------------------------------*/
//suppose the frequency of test chip is 18.432MHz
//-----------------------------------------------

        ORG     0000H
        LJMP    MAIN
//---------------------------------------

        ORG     0100H
MAIN:
        MOV     SP,     #3FH

LOOP:
        MOV     PCON,   #01H            //set IDL(PCON.0) as 1, MCU in Idle mode
        NOP                             //internal interrupts or external interrupts singnal can
        NOP                             //wake up mcu from idle mode
        NOP
        NOP
        JMP     LOOP
;---------------------------------------------

        END
```

STC MCU Limited.

2.2.3 Stop / Power Down (PD) Mode and Demo Program (C and ASM)

Setting the PD/PCON.1 bit enters Stop/Power-Down mode. In the Stop/Power-Down mode, the on-chip oscillator and the Flash memory are stopped in order to minimize power consumption. Only the power-on circuitry will continue to draw power during Stop/Power-Down. The contents of on-chip RAM and SFRs are maintained. The stop/power-down mode can be woken-up by RESET pin, external interrupt INT0/INT1/ $\overline{\text{INT2}}$/ $\overline{\text{INT3}}$/ $\overline{\text{INT4}}$, RxD/ RxD2/RxD3/RxD4 pins, T0/T1/T2/T3/T4 pins, CCP/PCA/PWM input pins — CCP0/CCP1/CCP2/CCP3/CCP4/ CCP5 pins, low-voltage detection interrupt and internal power-down wake-up Timer.

When it is woken-up by RESET, the program will execute from the ISP monitor program area. Be carefully to keep RESET pin active for at least 10ms in order for a stable clock.

If it is woken-up from I/O, the CPU will rework through jumping to related interrupt service routine. Before the CPU rework, the clock is blocked and counted until 32768 in order for denouncing the unstable clock. To use I/O wake-up, interrupt-related registers have to be enabled and programmed accurately before power-down is entered. Pay attention to have at least one “NOP” instruction subsequent to the power-down instruction if I/O wake-up is used. When terminating Power-down by an interrupt, the wake up period is internally timed. At the negative edge on the interrupt pin, Power-Down is exited, the oscillator is restarted, and an internal timer begins counting. The internal clock will be allowed to propagate and the CPU will not resume execution until after the timer has reached internal counter full. After the timeout period, the interrupt service routine will begin. To prevent the interrupt from re-triggering, the interrupt service routine should disable the interrupt before returning. The interrupt pin should be held low until the device has timed out and begun executing. The user should not attempt to enter (or re-enter) the power-down mode for a minimum of 4 us until after one of the following conditions has occured: Start of code execution(after any type of reset), or Exit from power-down mode.

STC MCU Limited.

1. C Program Listing

```
/*---------------------------------------------------------------------------------------------------------*/
/* --- STC MCU  Limited. ---------------------------------------------------------------------------------*/
/* --- Exam Program of Stop/Power-Down mode --------------------------------------------------------------*/
/* --- Mobile: (86)13922805190 ---------------------------------------------------------------------------*/
/* --- Fax: 86-755-82905966 ------------------------------------------------------------------------------*/
/* --- Tel: 86-755-82948412 ------------------------------------------------------------------------------*/
/* --- Web: www.STCMCU.com -------------------------------------------------------------------------------*/
/* If you want to use the program or the program referenced in the  ----------------------------*/
/* article, please specify in which data and procedures from STC    ----------------------------*/
/*---- In Keil C development environment, select the Intel 8052 to compiling ------------------*/
/*----  And only contain < reg51.h > as header file ---------------------------------------------*/
/*---------------------------------------------------------------------------------------------------------*/

//suppose the frequency of test chip is 18.432MHz

#include "reg51.h"
#include "intrins.h"
//-----------------------------------------------
void main()
{
```

```
        while (1)
        {
                PCON |= 0x02;           //Set STOP(PCON.1) as 1.
                                        // After this instruction, MCU will be in power-down mode
                                        //external clock stop
                _nop_();
                _nop_();
                _nop_();
        }
}
```

2. Assembler Listing

```
/*---------------------------------------------------------------------------------------------------*/
/* --- STC MCU  Limited. ---------------------------------------------------------------------------*/
/* --- Exam Program of Stop/Power-Down mode --------------------------------------------------------*/
/* --- Mobile: (86)13922805190 ---------------------------------------------------------------------*/
/* --- Fax: 86-755-82905966 ------------------------------------------------------------------------*/
/* --- Tel: 86-755-82948412 ------------------------------------------------------------------------*/
/* --- Web: www.STCMCU.com -------------------------------------------------------------------------*/
/* If you want to use the program or the program referenced in the  ----------------------------*/
/* article, please specify in which data and procedures from STC    ----------------------------*/
/*---- In Keil C development environment, select the Intel 8052 to compiling ------------------*/
/*----  And only contain < reg51.h > as header file ------------------------------------------------*/
/*---------------------------------------------------------------------------------------------------*/

//suppose the frequency of test chip is 18.432MHz
//-----------------------------------------
        ORG     0000H
        LJMP    MAIN
//-----------------------------------------
        ORG     0100H
MAIN:
        MOV     SP,     #3FH

LOOP:
        MOV     PCON,   #02H            //Set STOP(PCON.1) as 1
                                        // After this instruction, MCU will be in power-down mode
                                        //external clock stop

        NOP
        NOP
        NOP
        NOP
        JMP     LOOP
;-----------------------------------------

        END
```

STC MCU Limited.

2.3.3.1 Demo Program Using Power-Down Wake-Up Timer to Wake Up Stop/PD Mode

/*Demo program using internal power-down wake-up special Timer wake up Stop/Power-Down mode(C and ASM) */

1. C Program Listing

```
/*---------------------------------------------------------------------------------------------------*/
/* --- STC MCU  Limited. ---------------------------------------------------------------------------*/
/* --- Exam Program using power-down wake-up Timer to wake up Stop/Power-Down mode */
/* --- Mobile: (86)13922805190 ---------------------------------------------------------------------*/
/* --- Fax: 86-755-82905966 ------------------------------------------------------------------------*/
/* --- Tel: 86-755-82948412 ------------------------------------------------------------------------*/
/* --- Web: www.STCMCU.com -------------------------------------------------------------------------*/
/* If you want to use the program or the program referenced in the  ----------------------------------*/
/* article, please specify in which data and procedures from STC    ----------------------------------*/
/*---- In Keil C development environment, select the Intel 8052 to compiling ----------------------*/
/*----  And only contain < reg51.h > as header file ------------------------------------------------*/
/*---------------------------------------------------------------------------------------------------*/

//suppose the frequency of test chip is 18.432MHz

#include "reg51.h"
#include "intrins.h"

//-----------------------------------------------

sfr     WKTCL  =        0xaa;
sfr     WKTCH =         0xab;

sbit    P10 = P1^0;

//-----------------------------------------------
void main()
{
        WKTCL = 49;                     //wake-up cycle: 488us*(49+1) = 24.4ms
        WKTCH = 0x80;

        while (1)
        {
                PCON = 0x02;            //Enter Stop/Power-Down Mode
                _nop_();
                _nop_();
                P10 = !P10;
        }
}
```

STC MCU Limited.

2. Assembler Listing

```
/*---------------------------------------------------------------------------------------------------*/
/* --- STC MCU  Limited. ---------------------------------------------------------------------------*/
/* --- Exam Program using power-down wake-up Timer wake up Stop/Power-Down mode -*/
/* --- Mobile: (86)13922805190 ---------------------------------------------------------------------*/
/* --- Fax: 86-755-82905966 ------------------------------------------------------------------------*/
/* --- Tel: 86-755-82948412 ------------------------------------------------------------------------*/
/* --- Web: www.STCMCU.com -------------------------------------------------------------------------*/
/* If you want to use the program or the program referenced in the  ----------------------------*/
/* article, please specify in which data and procedures from STC    ----------------------------*/
/*---- In Keil C development environment, select the Intel 8052 to compiling ----------------*/
/*----  And only contain < reg51.h > as header file ------------------------------------------------*/
/*---------------------------------------------------------------------------------------------------*/

//suppose the frequency of test chip is 18.432MHz

WKTCL  DATA   0AAH
WKTCH DATA   0ABH

//---------------------------------------

        ORG     0000H
        LJMP    MAIN

//---------------------------------------

        ORG     0100H
MAIN:
        MOV     SP,       #3FH

        MOV     WKTCL, #49                  //wake-up cycle: 488us*(49+1) = 24.4ms
        MOV     WKTCH,#80H
LOOP:
        MOV     PCON,   #02H                //Enter Stop/Power-Down Mode
        NOP
        NOP
        CPL     P1.0
        JMP     LOOP

        SJMP    $

;---------------------------------------

        END
```

STC MCU Limited.

2.3.3.2 Demo Program Using External Interrupt INT0 to Wake Up Stop/PD Mode

1. C Program Listing

```
/*---------------------------------------------------------------------------------------------------------------------*/
/* --- STC MCU  Limited. ---------------------------------------------------------------------------------------------*/
/* --- Exam Program using external interrupt INT0 (rising +falling edge) to wake up Stop/Power-Down mode  */
/* --- Mobile: (86)13922805190 ---------------------------------------------------------------------------------------*/
/* --- Fax: 86-755-82905966 ------------------------------------------------------------------------------------------*/
/* --- Tel: 86-755-82948412 ------------------------------------------------------------------------------------------*/
/* --- Web: www.STCMCU.com -------------------------------------------------------------------------------------------*/
/* If you want to use the program or the program referenced in the  ----------------------------------------------*/
/* article, please specify in which data and procedures from STC    ----------------------------------------------*/
/*---- In Keil C development environment, select the Intel 8052 to compiling ----------------------------------------*/
/*----  And only contain < reg51.h > as header file ------------------------------------------------------------------*/
/*---------------------------------------------------------------------------------------------------------------------*/

//suppose the frequency of test chip is 18.432MHz

#include "reg51.h"
#include "intrins.h"

//-----------------------------------------------
bit     FLAG;                           //1:generate a interrupt on rising edge
                                        //0:generate a interrupt on falling edge
sbit    P10     =       P1^0;

//-----------------------------------------------
//Interrupt service routine
void exint0() interrupt 0
{
        P10     =       !P10;
        FLAG    =       INT0;           //save the sate of INT0, INT0=0(falling); INT0=1(rising)
}
//-----------------------------------------------

void main()
{
        IT0 = 0;                        //Both rising and falling edge of INT0 can wake up MCU
//      IT0 = 1;                        //Only falling edge of INT0 can wake up MCU

        EX0 = 1;
        EA = 1;

        while (1)
        {
                PCON = 0x02;            //MCU enter Stop/Power-Down mode
                _nop_();                //Fisrt implement this statement and then enter interrupt service routine
                                        //after  be waked up from  Stop/Power-Down mode
                _nop_();
    }
}
```

STC MCU Limited.

2. Assembler Listing

```
/*---------------------------------------------------------------------------------------------------------------------*/
/* --- STC MCU  Limited. ---------------------------------------------------------------------------------------------*/
/* --- Exam Program using external interrupt INT0 (rising +falling edge) to wake up Stop/Power-Down mode  */
/* --- Mobile: (86)13922805190 ---------------------------------------------------------------------------------------*/
/* --- Fax: 86-755-82905966 ------------------------------------------------------------------------------------------*/
/* --- Tel: 86-755-82948412 ------------------------------------------------------------------------------------------*/
/* --- Web: www.STCMCU.com -------------------------------------------------------------------------------------------*/
/* If you want to use the program or the program referenced in the  ----------------------------------------------*/
/* article, please specify in which data and procedures from STC    ----------------------------------------------*/
/*---- In Keil C development environment, select the Intel 8052 to compiling ----------------------------------------*/
/*----  And only contain < reg51.h > as header file ------------------------------------------------------------------*/
/*---------------------------------------------------------------------------------------------------------------------*/

//suppose the frequency of test chip is 18.432MHz

FLAG    BIT     20H.0           //1:generate a interrupt on rising edge
                                //0:generate a interrupt on falling edge
//---------------------------------------
        ORG     0000H
        LJMP    MAIN

        ORG     0003H
        LJMP    EXINT0
//---------------------------------------
        ORG     0100H
MAIN:
        MOV     SP,     #3FH

        CLR     IT0             //Both rising and falling edge of INT0 can wake up MCU
//      SETB    IT0             //Only falling edge of INT0 can wake up MCU
        SETB    EX0
        SETB    EA

LOOP:
        MOV     PCON,   #02H    //MCU enter Stop/Power-Down mode
        NOP                     //Fisrt implement this statement and then enter interrupt service routine
                                //after  be waked up from  Stop/Power-Down mode
        NOP
        SJMP    LOOP
//---------------------------------------
EXINT0:                         //Interrupt service routine
        CPL     P1.0
        PUSH    PSW
        MOV     C,      INT0    //read the state of INT0
        MOV     FLAG,   C       //save the sate of INT0, INT0=0(falling); INT0=1(rising)
        POP     PSW
        RETI
;---------------------------------------
        END
```

STC MCU Limited.

2.3.3.3 Demo Program Using External Interrupt INT1 to Wake Up Stop/PD Mode

1. C Program Listing

```
/*---------------------------------------------------------------------------------------------------------------------*/
/* --- STC MCU Limited. ------------------------------------------------------------------------------------------------*/
/* --- Exam Program using external interrupt INT1 (rising +falling edge) to wake up Stop/Power-Down mode  */
/* --- Mobile: (86)13922805190 -----------------------------------------------------------------------------------------*/
/* --- Fax: 86-755-82905966 --------------------------------------------------------------------------------------------*/
/* --- Tel: 86-755-82948412 --------------------------------------------------------------------------------------------*/
/* --- Web: www.STCMCU.com ---------------------------------------------------------------------------------------------*/
/* If you want to use the program or the program referenced in the  ------------------------------------------------*/
/* article, please specify in which data and procedures from STC    ------------------------------------------------*/
/*---- In Keil C development environment, select the Intel 8052 to compiling ----------------------------------------*/
/*----  And only contain < reg51.h > as header file ------------------------------------------------------------------*/
/*---------------------------------------------------------------------------------------------------------------------*/

//suppose the frequency of test chip is 18.432MHz

#include "reg51.h"
#include "intrins.h"

//-----------------------------------------------
bit     FLAG;                           //1:generate a interrupt on rising edge
                                        //0:generate a interrupt on falling edge
sbit    P10     =       P1^0;
//-----------------------------------------

void exint1() interrupt 2
{
        P10     =       !P10;
        FLAG    =       INT1;           //save the sate of INT1, INT1=0(falling); INT1=1(rising)
}
//-----------------------------------------------

void main()                             //Interrupt service routine
{
        IT1     =       0;      //Both rising and falling edge of INT1 can wake up MCU
//      IT1     =       1;      //Only falling edge of INT1 can wake up MCU

        EX1     =       1;
        EA      =       1;

        while (1)
        {
                PCON = 0x02;    //MCU enter Stop/Power-Down mode
                _nop_();        //Fisrt implement this statement and then enter interrupt service routine
                                //after  be waked up from  Stop/Power-Down mode
                _nop_();
        }
}
```

STC MCU Limited.

2. Assembler Listing

```
/*---------------------------------------------------------------------------------------------------------------------*/
/* --- STC MCU  Limited. -----------------------------------------------------------------------------------------*/
/* --- Exam Program using external interrupt INT1 (rising +falling edge) to wake up Stop/Power-Down mode  */
/* --- Mobile: (86)13922805190 -----------------------------------------------------------------------------------*/
/* --- Fax: 86-755-82905966 --------------------------------------------------------------------------------------*/
/* --- Tel: 86-755-82948412 --------------------------------------------------------------------------------------*/
/* --- Web: www.STCMCU.com ---------------------------------------------------------------------------------------*/
/* If you want to use the program or the program referenced in the  ------------------------------------------*/
/* article, please specify in which data and procedures from STC    ------------------------------------------*/
/*---- In Keil C development environment, select the Intel 8052 to compiling ----------------------------------*/
/*----  And only contain < reg51.h > as header file ------------------------------------------------------------*/
/*---------------------------------------------------------------------------------------------------------------------*/

//suppose the frequency of test chip is 18.432MHz

FLAG    BIT     20H.0                   //1:generate a interrupt on rising edge
                                        //0:generate a interrupt on falling edge
//---------------------------------------
        ORG     0000H
        LJMP    MAIN

        ORG     0013H
        LJMP    EXINT1
//---------------------------------------
        ORG     0100H
MAIN:
        MOV     SP,     #3FH

        CLR     IT1             //Both rising and falling edge of INT1 can wake up MCU
//      SETB    IT1             //Only falling edge of INT1 can wake up MCU

        SETB    EX1
        SETB    EA

LOOP:
        MOV     PCON,   #02H    //MCU enter Stop/Power-Down mode
        NOP                     //Fisrt implement this statement and then enter interrupt service routine
                                //after  be waked up from  Stop/Power-Down mode

        NOP
        SJMP    LOOP
;---------------------------------------
EXINT1:
        CPL     P1.0
        PUSH    PSW
        MOV     C,      INT1            //read the state of INT1
        MOV     FLAG,   C               //save the sate of INT1, INT1=0(falling); INT1=1(rising)
        POP     PSW
        RETI
;---------------------------------------

        END
```

STC MCU Limited.

2.3.3.4 Demo Program Using External Interrupt $\overline{\text{INT2}}$ to Wake Up Stop/PD Mode

1. C Program Listing

```
/*---------------------------------------------------------------------------------------------------------------------*/
/* --- STC MCU  Limited. ---------------------------------------------------------------------------------------------*/
/* --- Exam Program using external interrupt /INT2 (only falling edge) to wake up Stop/Power-Down mode  ---*/
/* --- Mobile: (86)13922805190 ---------------------------------------------------------------------------------------*/
/* --- Fax: 86-755-82905966 ------------------------------------------------------------------------------------------*/
/* --- Tel: 86-755-82948412 ------------------------------------------------------------------------------------------*/
/* --- Web: www.STCMCU.com -------------------------------------------------------------------------------------------*/
/* If you want to use the program or the program referenced in the  ----------------------------------------------*/
/* article, please specify in which data and procedures from STC    ----------------------------------------------*/
/*---- In Keil C development environment, select the Intel 8052 to compiling ----------------------------------------*/
/*----  And only contain < reg51.h > as header file ------------------------------------------------------------------*/
/*---------------------------------------------------------------------------------------------------------------------*/

//suppose the frequency of test chip is 18.432MHz

#include "reg51.h"
#include "intrins.h"
//-----------------------------------------------

sfr         INT_CLKO        =       0x8F;
sbit        INT2    =       P3^6;

sbit        P10     =       P1^0;
//-----------------------------------------------
//Interrupt service routine
void exint2() interrupt 10
{
            P10     =       !P10;

//          INT_CLKO    &=  0xEF;
//          INT_CLKO    |=  0x10;
}
//-----------------------------------------------
void main()
{
            INT_CLKO    |=  0x10;                   //(EX2 = 1) enable the falling edge of INT2 interrupt
            EA = 1;

            while (1)
            {
                        PCON = 0x02;                //MCU  enter Stop/Power-Down mode
                        _nop_();            //Fisrt implement this statement and then enter interrupt service routine
                                            //after  be waked up from  Stop/Power-Down mode
                        _nop_();
            }
}
```

STC MCU Limited.

2. Assembler Listing

```
/*---------------------------------------------------------------------------------------------------------------------*/
/* --- STC MCU  Limited. ---------------------------------------------------------------------------------------------*/
/* --- Exam Program using external interrupt /INT2 (only falling edge) to wake up Stop/Power-Down mode  ---*/
/* --- Mobile: (86)13922805190 ---------------------------------------------------------------------------------------*/
/* --- Fax: 86-755-82905966 ------------------------------------------------------------------------------------------*/
/* --- Tel: 86-755-82948412 ------------------------------------------------------------------------------------------*/
/* --- Web: www.STCMCU.com -------------------------------------------------------------------------------------------*/
/* If you want to use the program or the program referenced in the  ----------------------------------------------*/
/* article, please specify in which data and procedures from STC    ----------------------------------------------*/
/*---- In Keil C development environment, select the Intel 8052 to compiling ----------------------------------------*/
/*----  And only contain < reg51.h > as header file ------------------------------------------------------------------*/
/*---------------------------------------------------------------------------------------------------------------------*/

//suppose the frequency of test chip is 18.432MHz

INT_CLKO        DATA    08FH
INT2            BIT     P3.6
//-----------------------------------------

        ORG     0000H
        LJMP    MAIN

        ORG     0053H
        LJMP    EXINT2
//-----------------------------------------

        ORG     0100H
MAIN:
        MOV     SP,     #3FH

        ORL     INT_CLKO,       #10H    //(EX2 = 1) enable the falling edge of INT2 interrupt

        SETB    EA

LOOP:
        MOV     PCON,   #02H            //MCU  enter Stop/Power-Down mode
        NOP                             //Fisrt implement this statement and then enter interrupt service routine
                                        //after  be waked up from  Stop/Power-Down mode

        NOP
        SJMP    LOOP
//-----------------------------------------
//Interrupt service routine

EXINT2:
        CPL     P1.0
//      ANL     INT_CLKO,       #0EFH
//      ORL     INT_CLKO,       #10H

        RETI
;---------------------------------------
        END
```

STC MCU Limited.

2.3.3.5 Demo Program Using External Interrupt $\overline{\text{INT3}}$ to Wake Up Stop/PD Mode

1. C Program Listing

```
/*---------------------------------------------------------------------------------------------------------------------*/
/* --- STC MCU  Limited. ---------------------------------------------------------------------------------------------*/
/* --- Exam Program using external interrupt /INT3 (only falling edge) to wake up Stop/Power-Down mode  ---*/
/* --- Mobile: (86)13922805190 ---------------------------------------------------------------------------------------*/
/* --- Fax: 86-755-82905966 ------------------------------------------------------------------------------------------*/
/* --- Tel: 86-755-82948412 ------------------------------------------------------------------------------------------*/
/* --- Web: www.STCMCU.com -------------------------------------------------------------------------------------------*/
/* If you want to use the program or the program referenced in the  ----------------------------------------------*/
/* article, please specify in which data and procedures from STC  -------------------------------------------------*/
/*---- In Keil C development environment, select the Intel 8052 to compiling ----------------------------------------*/
/*----  And only contain < reg51.h > as header file ------------------------------------------------------------------*/
/*---------------------------------------------------------------------------------------------------------------------*/

//suppose the frequency of test chip is 18.432MHz

#include "reg51.h"
#include "intrins.h"
//-----------------------------------------------

sfr     INT_CLKO        =       0x8F;
sbit    INT3    =       P3^7;

sbit    P10     =       P1^0;

//-----------------------------------------------
//Interrupt service routine
void exint3() interrupt 11
{
        P10     =       !P10;

//      INT_CLKO        &=      0xDF;
//      INT_CLKO        |=      0x20;
}
//-----------------------------------------------
void main()
{
        INT_CLKO        |=      0x20;           //(EX3 = 1) enable the falling edge of INT3 interrupt
        EA              =       1;

        while (1)
        {
                PCON = 0x02;                    //MCU  enter Stop/Power-Down mode
                _nop_();        //Fisrt implement this statement and then enter interrupt service routine
                                //after  be waked up from  Stop/Power-Down mode
                _nop_();
        }
}
```

STC MCU Limited.

2. Assembler Listing

```
/*---------------------------------------------------------------------------------------------------------------------*/
/* --- STC MCU  Limited. ---------------------------------------------------------------------------------------------*/
/* --- Exam Program using external interrupt /INT3 (only falling edge) to wake up Stop/Power-Down mode  ---*/
/* --- Mobile: (86)13922805190 ---------------------------------------------------------------------------------------*/
/* --- Fax: 86-755-82905966 ------------------------------------------------------------------------------------------*/
/* --- Tel: 86-755-82948412 ------------------------------------------------------------------------------------------*/
/* --- Web: www.STCMCU.com -------------------------------------------------------------------------------------------*/
/* If you want to use the program or the program referenced in the  ----------------------------------------------*/
/* article, please specify in which data and procedures from STC    ----------------------------------------------*/
/*---- In Keil C development environment, select the Intel 8052 to compiling ----------------------------------------*/
/*----  And only contain < reg51.h > as header file ------------------------------------------------------------------*/
/*---------------------------------------------------------------------------------------------------------------------*/

//suppose the frequency of test chip is 18.432MHz

INT_CLKO        DATA    08FH
INT3    BIT     P3.7
//---------------------------------------
        ORG     0000H
        LJMP    MAIN

        ORG     005BH
        LJMP    EXINT3
//---------------------------------------
        ORG     0100H
MAIN:
        MOV     SP,     #3FH

        ORL     INT_CLKO,       #20H            //(EX3 = 1) enable the falling edge of INT3 interrupt

        SETB    EA

LOOP:
        MOV     PCON,   #02H                    //MCU  enter Stop/Power-Down mode
        NOP                             //Fisrt implement this statement and then enter interrupt service routine
                                        //after  be waked up from  Stop/Power-Down mode
        NOP
        SJMP    LOOP
//---------------------------------------
//Interrupt service routine

EXINT3:
        CPL     P1.0

//      ANL     INT_CLKO,       #0DFH
//      ORL     INT_CLKO,       #20H

        RETI
;---------------------------------------
        END
```

STC MCU Limited.

2.3.3.6 Demo Program Using External Interrupt $\overline{\text{INT4}}$ to Wake Up Stop/PD Mode

1. C Program Listing

```
/*---------------------------------------------------------------------------------------------------------------------*/
/* --- STC MCU  Limited. ---------------------------------------------------------------------------------------------*/
/* --- Exam Program using external interrupt /INT4 (only falling edge) to wake up Stop/Power-Down mode  ---*/
/* --- Mobile: (86)13922805190 ---------------------------------------------------------------------------------------*/
/* --- Fax: 86-755-82905966 ------------------------------------------------------------------------------------------*/
/* --- Tel: 86-755-82948412 ------------------------------------------------------------------------------------------*/
/* --- Web: www.STCMCU.com -------------------------------------------------------------------------------------------*/
/* If you want to use the program or the program referenced in the  ----------------------------------------------*/
/* article, please specify in which data and procedures from STC    ----------------------------------------------*/
/*---- In Keil C development environment, select the Intel 8052 to compiling ----------------------------------------*/
/*----  And only contain < reg51.h > as header file ------------------------------------------------------------------*/
/*---------------------------------------------------------------------------------------------------------------------*/

//suppose the frequency of test chip is 18.432MHz

#include "reg51.h"
#include "intrins.h"

//-----------------------------------------------
sfr     INT_CLKO    =   0x8F;
sbit    INT4    =   P3^0;

sbit    P10     =   P1^0;

//-----------------------------------------------
//Interrupt service routine
void exint4() interrupt 16
{
        P10     =   !P10;

//      INT_CLKO    &=  0xBF;
//      INT_CLKO    |=  0x40;
}

//-----------------------------------------------
void main()
{
        INT_CLKO |= 0x40;                       //(EX4 = 1) enable the falling edge of INT4 interrupt
        EA = 1;

        while (1)
        {
                PCON    =   0x02;               //MCU enter Stop/Power-Down mode
                _nop_();            //Fisrt implement this statement and then enter interrupt service routine
                                    //after  be waked up from  Stop/Power-Down mode
                _nop_();
        }
}
```

STC MCU Limited.

2. Assembler Listing

```
/*---------------------------------------------------------------------------------------------------------------------*/
/* --- STC MCU  Limited. ---------------------------------------------------------------------------------------------*/
/* --- Exam Program using external interrupt /INT3 (only falling edge) to wake up Stop/Power-Down mode  ---*/
/* --- Mobile: (86)13922805190 ---------------------------------------------------------------------------------------*/
/* --- Fax: 86-755-82905966 ------------------------------------------------------------------------------------------*/
/* --- Tel: 86-755-82948412 ------------------------------------------------------------------------------------------*/
/* --- Web: www.STCMCU.com -------------------------------------------------------------------------------------------*/
/* If you want to use the program or the program referenced in the  ----------------------------------------------*/
/* article, please specify in which data and procedures from STC    ----------------------------------------------*/
/*---- In Keil C development environment, select the Intel 8052 to compiling ----------------------------------------*/
/*----  And only contain < reg51.h > as header file ------------------------------------------------------------------*/
/*---------------------------------------------------------------------------------------------------------------------*/

//suppose the frequency of test chip is 18.432MHz

INT_CLKO        DATA    08FH
INT4            BIT     P3.0
//-----------------------------------------
        ORG     0000H
        LJMP    MAIN

        ORG     0083H
        LJMP    EXINT4
//-----------------------------------------
        ORG     0100H
MAIN:
        MOV     SP,     #3FH
        ORL     INT_CLKO,       #40H            //(EX4 = 1) enable the falling edge of INT4 interrupt
        SETB    EA

LOOP:
        MOV     PCON,   #02H                    //MCU  enter Stop/Power-Down mode
        NOP                             //Fisrt implement this statement and then enter interrupt service routine
                                        //after  be waked up from  Stop/Power-Down mode
        NOP
        SJMP    LOOP

//-----------------------------------------
//Interrupt service routine

EXINT4:
        CPL     P1.0

//      ANL     INT_CLKO,       #0BFH
//      ORL     INT_CLKO,       #40H

        RETI
;---------------------------------------
        END
```

STC MCU Limited.

2.3.3.7 Program Using External Interrupt Extended by CCP/PCA to Wake Up PD Mode

/*Demo program using external interrupt (rising + falling edge) extended by CCP/PCA to wake up Stop/Power-Down mode(C and ASM) */

1. C Program Listing

```
/*-------------------------------------------------------------------------------------------------------------*/
/* --- STC MCU  Limited. ---------------------------------------------------------------------------------------*/
/* --- Exam Program using external interrupt extended by CCP/PCA to wake up Stop/Power-Down mode */
/* --- Mobile: (86)13922805190 ---------------------------------------------------------------------------------*/
/* --- Fax: 86-755-82905966 ------------------------------------------------------------------------------------*/
/* --- Tel: 86-755-82948412 ------------------------------------------------------------------------------------*/
/* --- Web: www.STCMCU.com -------------------------------------------------------------------------------------*/
/* If you want to use the program or the program referenced in the  ----------------------------------------*/
/* article, please specify in which data and procedures from STC    ----------------------------------------*/
/*---- In Keil C development environment, select the Intel 8052 to compiling ----------------------------------*/
/*----  And only contain < reg51.h > as header file ------------------------------------------------------------*/
/*-------------------------------------------------------------------------------------------------------------*/

//suppose the frequency of test chip is 18.432MHz

//This demo program take CCP/PCA module 0 for example. the use of CCP/PCA module 1 and CCP/PCA module
//2 are same as CCP/PCA module 0

#include "reg51.h"
#include "intrins.h"

#define   FOSC    18432000L

typedef unsigned char       BYTE;
typedef unsigned int        WORD;
typedef unsigned long       DWORD;

sfr       P_SW1     =     0xA2;

#define   CCP_S0  0x10                          //P_SW1.4
#define   CCP_S1  0x20                          //P_SW1.5

sfr       CCON    =     0xD8;                   //PCA Control register
sbit      CCF0    =     CCON^0;
sbit      CCF1    =     CCON^1;
sbit      CR      =     CCON^6;
sbit      CF      =     CCON^7;
sfr       CMOD    =     0xD9;
sfr       CL      =     0xE9;
sfr       CH      =     0xF9;
sfr       CCAPM0          =       0xDA;
sfr       CCAP0L          =       0xEA;
sfr       CCAP0H          =       0xFA;
sfr       CCAPM1          =       0xDB;
```

STC MCU Limited.

```
sfr     CCAP1L      =   0xEB;
sfr     CCAP1H      =   0xFB;
sfr     CCAPM2      =   0xDC;
sfr     CCAP2L      =   0xEC;
sfr     CCAP2H      =   0xFC;
sfr     PCA_PWM0    =   0xf2;
sfr     PCA_PWM1    =   0xf3;
sfr     PCA_PWM2    =   0xf4;

sbit    P10     =   P1^0;

void main()
{
        ACC     =   P_SW1;
        ACC     &=  ~(CCP_S0 | CCP_S1);     //CCP_S0=0 CCP_S1=0
        P_SW1   =   ACC;                    //(P1.2/ECI, P1.1/CCP0, P1.0/CCP1, P3.7/CCP2)

//      ACC     =   P_SW1;
//      ACC     &=  ~(CCP_S0 | CCP_S1);     //CCP_S0=1 CCP_S1=0
//      ACC     |=  CCP_S0;                 //(P3.4/ECI_2, P3.5/CCP0_2, P3.6/CCP1_2, P3.7/CCP2_2)
//      P_SW1   =   ACC;
//
//      ACC     =   P_SW1;
//      ACC     &=  ~(CCP_S0 | CCP_S1);     //CCP_S0=0 CCP_S1=1
//      ACC     |=  CCP_S1;                 //(P2.4/ECI_3, P2.5/CCP0_3, P2.6/CCP1_3, P2.7/CCP2_3)
//      P_SW1   =   ACC;

        CCON    =   0;

        CL      =   0;
        CH      =   0;
        CCAP0L  =   0;
        CCAP0H  =   0;
        CMOD    =   0x08;               //Seting the PCA clock as system clock
        CCAPM0  =   0x21;
//      CCAPM0  =   0x11;

//      CCAPM0  =   0x31;
        CR      =   1;
        EA      =   1;

        while (1)
        {
                PCON = 0x02;    //MCU enter Stop/Power-Down mode
                _nop_();        //Fisrt implement this statement and then enter interrupt service routine
                                //after  be waked up from  Stop/Power-Down mode
                _nop_();
        }
}
```

STC MCU Limited.

```
void PCA_isr() interrupt 7 using 1
{
        if (CCF0)
        {
                CCF0    =       0;
                P10     =       !P10;
        }
}
```

STC MCU Limited.

2. Assembler Listing

```
/*---------------------------------------------------------------------------------------------------------------*/
/* --- STC MCU  Limited. ---------------------------------------------------------------------------------------*/
/* --- Exam Program using external interrupt extended by CCP/PCA to wake up Stop/Power-Down mode */
/* --- Mobile: (86)13922805190 ----------------------------------------------------------------------------------*/
/* --- Fax: 86-755-82905966 -------------------------------------------------------------------------------------*/
/* --- Tel: 86-755-82948412 -------------------------------------------------------------------------------------*/
/* --- Web: www.STCMCU.com --------------------------------------------------------------------------------------*/
/* If you want to use the program or the program referenced in the  -----------------------------------------*/
/* article, please specify in which data and procedures from STC    -----------------------------------------*/
/*---- In Keil C development environment, select the Intel 8052 to compiling ----------------------------------*/
/*----  And only contain < reg51.h > as header file ----------------------------------------------------------*/
/*---------------------------------------------------------------------------------------------------------------*/

//suppose the frequency of test chip is 18.432MHz

//This demo program take CCP/PCA module 0 for example. the use of CCP/PCA module 1 and CCP/PCA module
//2 are same as CCP/PCA module 0

P_SW1   EQU     0A2H

CCP_S0  EQU     10H                     //P_SW1.4
CCP_S1  EQU     20H                     //P_SW1.5
CCON    EQU     0D8H                    //PCA Control register
CCF0    BIT     CCON.0
CCF1    BIT     CCON.1
CR      BIT     CCON.6
CF      BIT     CCON.7
CMOD    EQU     0D9H
CL      EQU     0E9H
CH      EQU     0F9H
```

```
CCAPM0          EQU     0DAH
CCAP0L          EQU     0EAH
CCAP0H          EQU     0FAH
CCAPM1          EQU     0DBH
CCAP1L          EQU     0EBH
CCAP1H          EQU     0FBH
CCAPM2          EQU     0DCH
CCAP2L          EQU     0ECH
CCAP2H          EQU     0FCH
PCA_PWM0        EQU     0F2H
PCA_PWM1        EQU     0F3H
PCA_PWM2        EQU     0F4H

//-----------------------------------------
        ORG     0000H
        LJMP    MAIN

        ORG     003BH
PCA_ISR:
        PUSH    PSW
        PUSH    ACC
CKECK_CCF0:
        JNB     CCF0,   PCA_ISR_EXIT
        CLR     CCF0
        CPL     P1.0
PCA_ISR_EXIT:
        POP     ACC
        POP     PSW
        RETI
//-----------------------------------------

        ORG     0100H
MAIN:
        MOV     SP,     #5FH

        MOV     A,      P_SW1
        ANL     A,      #0CFH           //CCP_S0=0 CCP_S1=0
        MOV     P_SW1,  A               //(P1.2/ECI, P1.1/CCP0, P1.0/CCP1, P3.7/CCP2)

//      MOV     A,      P_SW1
//      ANL     A,      #0CFH           //CCP_S0=1 CCP_S1=0

//      ORL     A,      #CCP_S0         //(P3.4/ECI_2, P3.5/CCP0_2, P3.6/CCP1_2, P3.7/CCP2_2)
//      MOV     P_SW1,  A
//
//      MOV     A,      P_SW1
//      ANL     A,      #0CFH           //CCP_S0=0 CCP_S1=1
//      ORL     A,      #CCP_S1         //(P2.4/ECI_3, P2.5/CCP0_3, P2.6/CCP1_3, P2.7/CCP2_3)
//      MOV     P_SW1,  A
```

STC MCU Limited.

```
        MOV     CCON,   #0
        CLR     A
        MOV     CL,     A
        MOV     CH,     A
        MOV     CCAP0L,         A
        MOV     CCAP0H,         A
        MOV     CMOD,           #08H    //Seting the PCA clock as system clock
        MOV     CCAPM0,         #21H
//      MOV     CCAPM0,         #11H
//      MOV     CCAPM0,         #31H

        SETB    CR
        SETB    EA

LOOP:
        MOV     PCON,   #02H    //MCU enter Stop/Power-Down mode
        NOP                     //Fisrt implement this statement and then enter interrupt service routine
                                //after  be waked up from  Stop/Power-Down mode

        NOP
        SJMP    LOOP

//----------------------------------------

        END
```

STC MCU Limited.

2.3.3.8 Program Using the Level Change of RxD pin to Wake Up Stop/PD Mode

/*Demo program using the level change from high to low of RxD pin to wake up Stop/Power-Down mode(C and ASM) */

1. C Program Listing

```
/*---------------------------------------------------------------------------------------------------------------------*/
/* --- STC MCU  Limited. ---------------------------------------------------------------------------------------------*/
/* --- Exam Program using the level change from high to low of RxD pin to wake up Stop/Power-Down mode */
/* --- Mobile: (86)13922805190 ---------------------------------------------------------------------------------------*/
/* --- Fax: 86-755-82905966 ------------------------------------------------------------------------------------------*/
/* --- Tel: 86-755-82948412 ------------------------------------------------------------------------------------------*/
/* --- Web: www.STCMCU.com -------------------------------------------------------------------------------------------*/
/* If you want to use the program or the program referenced in the  ----------------------------------------------*/
/* article, please specify in which data and procedures from STC    ----------------------------------------------*/
/*---- In Keil C development environment, select the Intel 8052 to compiling ----------------------------------------*/
/*----  And only contain < reg51.h > as header file ------------------------------------------------------------------*/
/*---------------------------------------------------------------------------------------------------------------------*/

//suppose the frequency of test chip is 18.432MHz

#include "reg51.h"
#include "intrins.h"

//-----------------------------------------------

sfr     AUXR    =   0x8e;          //Auxiliary register
sfr     T2H     =   0xd6;
sfr     T2L     =   0xd7;

sfr     P_SW1   =   0xA2;

#define S1_S0   0x40                //P_SW1.6
#define S1_S1   0x80                //P_SW1.7

sbit    P10     =   P1^0;

//-----------------------------------------------

void main()
{
        ACC     =   P_SW1;
        ACC     &=  ~(S1_S0 | S1_S1);       //S1_S0=0 S1_S1=0
        P_SW1   =   ACC;                    //(P3.0/RxD, P3.1/TxD)

//      ACC     =   P_SW1;
//      ACC     &=  ~(S1_S0 | S1_S1);       //S1_S0=1 S1_S1=0
//      ACC     |=  S1_S0;                  //(P3.6/RxD_2, P3.7/TxD_2)
//      P_SW1   =   ACC;
```

STC MCU Limited.

```
//
//      ACC     =       P_SW1;
//      ACC     &=      ~(S1_S0 | S1_S1);               //S1_S0=0 S1_S1=1

//      ACC     |=      S1_S1;                          //(P1.6/RxD_3, P1.7/TxD_3)
//      P_SW1   =       ACC;

        SCON    =       0x50;                           //8-bit variable baud rate
        T2L     =       (65536 - (FOSC/4/BAUD));        /Setting the reload value of buad rate
        T2H     =       (65536 - (FOSC/4/BAUD))>>8;
        AUXR    =       0x14;                           //T2 in 1T mode, and run Timer 2
        AUXR    |=      0x01;                   //Select Timer2 as the baud-rate generator of UART1

        ES      =       1;
        EA      =       1;

        while (1)
        {
                PCON = 0x02;    //MCU enter Stop/Power-Down mode
                _nop_();        //Fisrt implement this statement and then enter interrupt service routine
                                //after  be waked up from  Stop/Power-Down mode
                _nop_();
                P10 = !P10;
        }
}

/*-------------------------
UART interrupt service Routine
-------------------------*/
void Uart() interrupt 4 using 1
{
        if (RI)
        {
                RI = 0;                         //clear RI
                P0 = SBUF;
        }
        if (TI)
        {
                TI = 0;                         //clear TI
        }
}
```

STC MCU Limited.

2. Assembler Listing

```
/*---------------------------------------------------------------------------------------------------------------------*/
/* --- STC MCU  Limited. ---------------------------------------------------------------------------------------------*/
/* --- Exam Program using the level change from high to low of RxD pin to wake up Stop/Power-Down mode */
/* --- Mobile: (86)13922805190 ---------------------------------------------------------------------------------------*/
/* --- Fax: 86-755-82905966 ------------------------------------------------------------------------------------------*/
/* --- Tel: 86-755-82948412 ------------------------------------------------------------------------------------------*/
/* --- Web: www.STCMCU.com -------------------------------------------------------------------------------------------*/
/* If you want to use the program or the program referenced in the  ----------------------------------------------*/
/* article, please specify in which data and procedures from STC    ----------------------------------------------*/
/*---- In Keil C development environment, select the Intel 8052 to compiling ----------------------------------------*/
/*----  And only contain < reg51.h > as header file ------------------------------------------------------------------*/
/*---------------------------------------------------------------------------------------------------------------------*/

//suppose the frequency of test chip is 18.432MHz

//-----------------------------------------

AUXR    EQU     08EH                    //Auxiliary register
T2H     DATA    0D6H
T2L     DATA    0D7H

P_SW1   EQU     0A2H

S1_S0   EQU     40H                     //P_SW1.6
S1_S1   EQU     80H                     //P_SW1.7

//-----------------------------------------

        ORG     0000H
        LJMP    MAIN

        ORG     0023H
        LJMP    UART_ISR

//-----------------------------------------

        ORG     0100H
MAIN:
        MOV     SP,     #3FH
        MOV     A,      P_SW1
        ANL     A,      #03FH           //S1_S0=0 S1_S1=0
        MOV     P_SW1,  A               //(P3.0/RxD, P3.1/TxD)

//      MOV     A,      P_SW1
//      ANL     A,      #03FH           //S1_S0=1 S1_S1=0
//      ORL     A,      #S1_S0          //(P3.6/RxD_2, P3.7/TxD_2)
//      MOV     P_SW1,  A
//
```

STC MCU Limited.

```
//      MOV     A,      P_SW1
//      ANL     A,      #03FH           //S1_S0=0 S1_S1=1
//      ORL     A,      #S1_S1          //(P1.6/RxD_3, P1.7/TxD_3)
//      MOV     P_SW1,  A

        MOV     SCON,   #50H            //8-bit variable baud rate
        MOV     T2L,    #0D8H   //Setting the reload value of buad rate (65536-18432000/4/115200)
        MOV     T2H,    #0FFH
        MOV     AUXR,   #14H            //T2 in 1T mode, and run Timer 2
        ORL     AUXR,   #01H            //Select Timer2 as the baud-rate generator of UART1

        SETB    ES                      //enable UART1 interrupt
        SETB    A

LOOP:
        MOV     PCON,   #02H            //MCU enter Stop/Power-Down mode
        NOP                     //Fisrt implement this statement and then enter interrupt service routine
                                //after  be waked up from  Stop/Power-Down mode
        NOP
        CPL     P1.0
        SJMP    LOOP

;/*---------------------------
;UART interrupt service Routine
;---------------------------*/
UART_ISR:
        PUSH    ACC
        PUSH    PSW
        JNB     RI,     CHECKTI         //check RI
        CLR     RI                      //clear RI
        MOV     P0,     SBUF
CHECKTI:
        JNB     TI,     ISR_EXIT        //check TI
        CLR     TI                      //clear TI
ISR_EXIT:
        POP     PSW
        POP     ACC
        RETI
;----------------------------------------

        END
```

STC MCU Limited.

2.3.3.9 Program Using the Level Change of RxD2 pin to Wake Up Stop/PD Mode

/*Demo program using the level change from high to low of RxD2 pin to wake up Stop/Power-Down mode(C and ASM) */

1. C Program Listing

```
/*---------------------------------------------------------------------------------------------------------------*/
/* --- STC MCU Limited. ----------------------------------------------------------------------------------------*/
/* --- Exam Program using the level change from high to low of RxD2 pin to wake up Stop/Power-Down mode */
/* --- Mobile: (86)13922805190 ---------------------------------------------------------------------------------*/
/* --- Fax: 86-755-82905966 ------------------------------------------------------------------------------------*/
/* --- Tel: 86-755-82948412 ------------------------------------------------------------------------------------*/
/* --- Web: www.STCMCU.com -------------------------------------------------------------------------------------*/
/* If you want to use the program or the program referenced in the  ----------------------------------------*/
/* article, please specify in which data and procedures from STC    ----------------------------------------*/
/*---- In Keil C development environment, select the Intel 8052 to compiling ----------------------------------*/
/*----  And only contain < reg51.h > as header file ------------------------------------------------------------*/
/*---------------------------------------------------------------------------------------------------------------*/

//suppose the frequency of test chip is 18.432MHz

#include "reg51.h"
#include "intrins.h"

#define   FOSC    18432000L                 //System frequency
#define   BAUD    115200
#define   TM      (65536 - (FOSC/4/BAUD))

//-----------------------------------------------

sfr       AUXR    =       0x8e;             //Auxiliary register
sfr       S2CON   =       0x9a;
sfr       S2BUF   =       0x9b;
sfr       T2H     =       0xd6;
sfr       T2L     =       0xd7;
sfr       IE2     =       0xaf;

#define   S2RI    0x01                      //S2CON.0
#define   S2TI    0x02                      //S2CON.1
#define   S2RB8   0x04                      //S2CON.2
#define   S2TB8   0x08                      //S2CON.3

sfr       P_SW2   =       0xBA;

#define   S2_S    0x01                      //P_SW2.0

sbit      P20     =       P2^0;

//-----------------------------------------------
```

STC MCU Limited.

```
void main()
{
        P_SW2   &=      ~S2_S;          //S2_S=0 (P1.0/RxD2, P1.1/TxD2)
//      P_SW2   |=      S2_S;           //S2_S=1 (P4.6/RxD2_2, P4.7/TxD2_2)

        S2CON   =       0x50;           //8-bit variable baud rate
        T2L     =       TM;             //Setting the reload value of buad rate
        T2H     =       TM>>8;
        AUXR    =       0x14;           //T2 in 1T mode, and run Timer 2

        IE2     =       0x01;           //enable UART1 interrupt
        EA      =       1;

        while (1)
        {
                PCON    =       0x02;   //MCU enter Stop/Power-Down mode
                _nop_();                //Fisrt implement this statement and then enter interrupt service routine
                                        //after  be waked up from  Stop/Power-Down mode
                _nop_();
                P20     =       !P20;
        }
}

/*-------------------------
UART2 interrupt service Routine
-------------------------*/
void Uart2() interrupt 8 using 1
{
        if (S2CON & S2RI)
        {
                S2CON   &=      ~S2RI;          //clear S2RI
                P0      =       S2BUF;
        }
        if (S2CON & S2TI)
        {
                S2CON   &=      ~S2TI;          //clear S2TI
        }
}
```

STC MCU Limited.

2. Assembler Listing

```
/*---------------------------------------------------------------------------------------------------------------------*/
/* --- STC MCU  Limited. ---------------------------------------------------------------------------------------------*/
/* --- Exam Program using the level change from high to low of RxD2 pin to wake up Stop/Power-Down mode */
/* --- Mobile: (86)13922805190 ---------------------------------------------------------------------------------------*/
/* --- Fax: 86-755-82905966 ------------------------------------------------------------------------------------------*/
/* --- Tel: 86-755-82948412 ------------------------------------------------------------------------------------------*/
/* --- Web: www.STCMCU.com -------------------------------------------------------------------------------------------*/
/* If you want to use the program or the program referenced in the  ----------------------------------------------*/
/* article, please specify in which data and procedures from STC    ----------------------------------------------*/
/*---- In Keil C development environment, select the Intel 8052 to compiling ----------------------------------------*/
/*----  And only contain < reg51.h > as header file ------------------------------------------------------------------*/
/*---------------------------------------------------------------------------------------------------------------------*/

//suppose the frequency of test chip is 18.432MHz

AUXR    EQU     08EH                    //Auxiliary register
S2CON   EQU     09AH
S2BUF   EQU     09BH
T2H     DATA    0D6H
T2L     DATA    0D7H
IE2     EQU     0AFH

P_SW2   EQU     0BAH

S2_S    EQU     01H                     //P_SW2.0

S2RI    EQU     01H                     //S2CON.0
S2TI    EQU     02H                     //S2CON.1
S2RB8   EQU     04H                     //S2CON.2
S2TB8   EQU     08H                     //S2CON.3

//----------------------------------------

        ORG     0000H
        LJMP    MAIN

        ORG     0043H
        LJMP    UART2_ISR
//----------------------------------------

        ORG     0100H
MAIN:
        MOV     SP,     #3FH

        ANL     P_SW2,  #NOT S2_S               //S2_S=0 (P1.0/RxD2, P1.1/TxD2)
//      ORL     P_SW2,  #S2_S                   //S2_S=1 (P4.6/RxD2_2, P4.7/TxD2_2)

        MOV     S2CON,          #50H            //8-bit variable baud rate
```

STC MCU Limited.

```
        MOV     T2L,    #0D8H           //Setting the reload value of buad rate
                                        //(65536-18432000/4/115200)
        MOV     T2H,    #0FFH
        MOV     AUXR,   #14H            //T2 in 1T mode, and run Timer 2

        ORL     IE2,    #01H            //enable UART1 interrupt
        SETB    EA

LOOP:
        MOV     PCON,   #02H            //MCU enter Stop/Power-Down mode
        NOP                     //Fisrt implement this statement and then enter interrupt service routine
                                //after  be waked up from  Stop/Power-Down mode
        NOP
        CPL     P1.0
        SJMP    LOOP

;/*-------------------------
;UART2 interrupt service Routine
;-------------------------*/
UART2_ISR:
        PUSH    ACC
        PUSH    PSW
        MOV     A,      S2CON
        JNB     ACC.0,  CHECKTI         ;check S2RI
        ANL     S2CON,  #NOT S2RI       ;clear S2RI
        MOV     P0,     S2BUF
CHECKTI:
        MOV     A,      S2CON
        JNB     ACC.1,  ISR_EXIT        ;check S2TI
        ANL     S2CON,  #NOT S2TI       ;clear S2TI
ISR_EXIT:
        POP     PSW
        POP     ACC
        RETI

;-----------------------------------------

        END
```

STC MCU Limited.

Chapter 3 Memory Organization and SFRs

The STC15 series MCU has separate address space for Program Memory and Data Memory. The logical separation of program and data memory allows the data memory to be accessed by 8-bit addresses, which can be quickly stored and manipulated by the CPU.

Program memory (ROM) can only be read, not written to. In the STC15 series, all the program memory are on-chip Flash memory, and without the capability of accessing external program memory because of no External Access Enable (/EA) and Program Store Enable (/PSEN) signals designed.

Data memory occupies a separate address space from program memory. There are large capacity of on-chip RAM in STC15 series MCU. For example, the STC15W4K32S4 series implements 4096 bytes of on-chip RAM which consists of 256 bytes of internal scratch-pad RAM and 3840 bytes of on-chip expanded RAM(XRAM), the STC15F2K60S2 series implements 2048 bytes of on-chip RAM which consists of 256 bytes of internal scratch-pad RAM and 1792 bytes of on-chip expanded RAM(XRAM), the STC15F1K28AD series implements 1024 bytes of on-chip RAM which consists of 256 bytes of internal scratch-pad RAM and 768 bytes of on-chip expanded RAM(XRAM). The upper 128 bytes occupy a parallel address space to the Special Function Registers. This means that the upper 128 bytes have the same addresses as the SFR space but arephysically separate from SFR space. Besides 64K bytes external expanded RAM also can be accessed in part of STC15 series MCU.

STC MCU Limited

3.1 Program Memory

Program memory is the memory which stores the program codes for the CPU to execute. For ST15F2K60S2 series MCU example, there is 8/16/24/32/40/48/56/60/61K bytes of flash memory embedded for program and data storage. The design allows users to configure it as like there are three individual partition banks inside. They are called AP(application program) region, IAP (In-Application-Program) region and ISP (In-System-Program) boot region. AP region is the space that user program is resided. IAP(In-Application-Program) region is the nonvolatile data storage space that may be used to save important parameters by AP program. In other words, the IAP capability of STC15 provides the user to read/write the user-defined on-chip data flash region to save the needing in use of external EEPROM device. ISP boot region is the space that allows a specific program we calls “ISP program” is resided. Inside the ISP region, the user can also enable read/write access to a small memory space to store parameters for specific purposes. Generally, the purpose of ISP program is to fulfill AP program upgrade without the need to remove the device from system. STC15 hardware catches the configuration information since power-up duration and performs out-of-space hardware-protection depending on pre-determined criteria. The criteria is AP region can be accessed by ISP program only, IAP region can be accessed by ISP program and AP program, and ISP region is prohibited access from AP program and ISP program itself. But if the “ISP data flash is enabled”, ISP program can read/write this space. When wrong settings on ISP-IAP SFRs are done, The “out-of-space” happens and STC15 follows the criteria above, ignore the trigger command.

After reset, the CPU begins execution from the location 0000H of Program Memory, where should be the starting of the user’s application code. To service the interrupts, the interrupt service locations (called interrupt vectors) should be located in the program memory. Each interrupt is assigned a fixed location in the program memory. The interrupt causes the CPU to jump to that location, where it commences execution of the service routine. External Interrupt 0, for example, is assigned to location 0003H. If External Interrupt 0 is going to be used, its service routine must begin at location 0003H. If the interrupt is not going to be used, its service location is available as general purpose program memory.

The interrupt service locations are spaced at an interval of 8 bytes: 0003H for External Interrupt 0, 000BH for Timer 0, 0013H for External Interrupt 1, 001BH for Timer 1, etc. If an interrupt service routine is short enough (as is often the case in control applications), it can reside entirely within that 8-byte interval. Longer service routines can use a jump instruction to skip over subsequent interrupt locations, if other interrupts are in use.

Flash memory with flexibility can be repeatedly erased more than 100 thousand times.

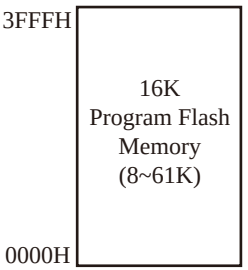

STC15F2K16S2 Program Memory

Type	Program Memory
STC15F/L2K08S2	0000H~1FFFH (8K)
STC15F/L2K16S2	0000H~3FFFH (16K)
STC15F/L2K24S2	0000H~5FFFH (24K)
STC15F/L2K32S2	0000H~7FFFH (32K)
STC15F/L2K40S2	0000H~9FFFH (40K)
STC15F/L2K48S2	0000H~0BFFFH (48K)
STC15F/L2K56S2	0000H~0DFFFH (56K)
STC15F/L2K60S2	0000H~0EFFFH (60K)
IAP15F/L2K61S2	0000H~0F3FFH (61K)

STC MCU Limited.

3.2 Data Memory (SRAM)

The SRAM size of STC15 series MCU is summarized as shown in the following table.

SRAM / MCU Type	on-chip RAM (SRAM) (Byte)	on-chip expanded RAM (XRAM) (Byte)	Can 64K bytes external expanded RAM be accessed
STC15W4K32S4 series	4K (256 <idata> + 3840 <xdata>)	3840	Yes
STC15F2K60S2 series	2K (256 <idata> + 1792 <xdata>)	1792	Yes
STC15W1K16S series	1K (256 <idata> +768 <xdata>)	768	Yes
STC15W404S series	512 (256 <idata> +256 <xdata>)	256	Yes
STC15W401AS series	512 (256 <idata> +256 <xdata>)	256	No
STC15F408AD series	512 (256 <idata> +256 <xdata>)	256	No
STC15W201S series	256 <idata>	No XRAM	No
STC15W10x series	128 <idata>	No XRAM	No
STC15F101W series	128 <idata>	No XRAM	No

STC MCU Limited.

For example, the STC15W4K32S4 series implements 4096 bytes of on-chip RAM which consists of 256 bytes of internal scratch-pad RAM and 3840 bytes of on-chip expanded RAM(XRAM). Besides 64K bytes external expanded RAM also can be accessed in part of STC15 series MCU.

3.2.1 On-chip Scratch-Pad RAM

Just the same as the conventional 8051 micro-controller, there are 256 bytes of internal scratch-pad RAM data memory plus 128 bytes of SFR space available on the STC15 series. The lower 128 bytes of data memory may be accessed through both direct and indirect addressing. The upper 128 bytes of data memory and the 128 bytes of SFR space share the same address space. The upper 128 bytes of data memory may only be accessed using indirect addressing. The 128 bytes of SFR can only be accessed through direct addressing. The lowest 32 bytes of data memory are grouped into 4 banks of 8 registers each. Program instructions call out these registers as R0 through R7. The RS0 and RS1 bits in PSW register select which register bank is in use. Instructions using register addressing will only access the currently specified bank. This allows more efficient use of code space, since register instructions are shorter than instructions that use direct addressing. The next 16 bytes (20H~2FH) above the register banks form a block of bit-addressable memory space. The 8051 instruction set includes a wide selection of single-bit instructions, and the 128 bits in this area can be directly addressed by these instructions. The bit addresses in this area are 00H through 7FH.

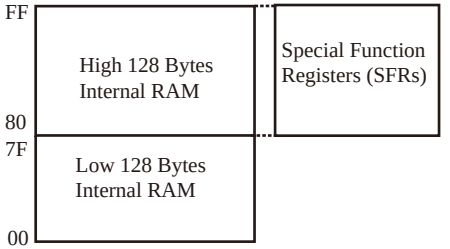

On-chip Scratch-Pad RAM

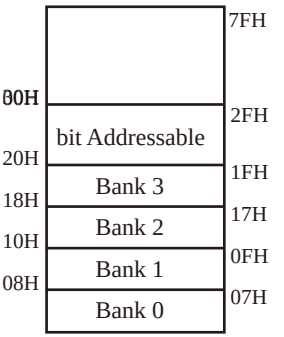

Lower 128 Bytes of internal SRAM

All of the bytes in the Lower 128 can be accessed by either direct or indirect addressing while the Upper 128 can only be accessed by indirect addressing. SFRs include the Port latches, timers, peripheral controls, etc. These registers can only be accessed by direct addressing. Sixteen addresses in SFR space are both byte- and bit-addressable. The bit-addressable SFRs are those whose address ends in 0H or 8H.

PSW register

SFR name	Address	bit	B7	B6	B5	B4	B3	B2	B1	B0
PSW	D0H	name	CY	AC	F0	RS1	RS0	OV	F1	P

CY : Carry flag.
This bit is set when the last arithmetic operation resulted in a carry (addition) or a borrow (subtrac-tion). It is cleared to logic 0 by all other arithmetic operations.

AC : Auxilliary Carry Flag.(For BCD operations)
This bit is set when the last arithmetic operation resulted in a carry into (addition) or a borrow from (subtraction) the high order nibble. It is cleared to logic 0 by all other arithmetic operations

F0 : Flag 0.(Available to the user for general purposes)

RS1: Register bank select control bit 1.

RS0: Register bank select control bit 0.

[RS1 RS0] select which register bank is used during register accesses

RS1	RS0	Working Register Bank(R0~R7) and Address
0	0	Bank 0(00H~07H)
0	1	Bank 1(08H~0FH)
1	0	Bank 2(10H~17H)
1	1	Bank 3(18H~1FH)

OV : Overflow flag.
This bit is set to 1 under the following circumstances:
• An ADD, ADDC, or SUBB instruction causes a sign-change overflow.
• A MUL instruction results in an overflow (result is greater than 255).
• A DIV instruction causes a divide-by-zero condition.
The OV bit is cleared to 0 by the ADD, ADDC, SUBB, MUL, and DIV instructions in all other cases.

STC MCU Limited

PSW register

SFR name	Address	bit	B7	B6	B5	B4	B3	B2	B1	B0
PSW	D0H	name	CY	AC	F0	RS1	RS0	OV	F1	P

F1 : Flag 1. User-defined flag.

P : Parity flag.
This bit is set to logic 1 if the sum of the eight bits in the accumulator is odd and cleared if the sum is even.

SP : Stack Pointer.
The Stsek Pointer Register is 8 bits wide. It is incremented before data is stored during PUSH and CALL executions. The stack may reside anywhere in on-chip RAM.On reset, the Stack Pointer is initialized to 07H causing the stack to begin at location 08H, which is also the first register (R0) of register bank 1. Thus, if more than one register bank is to be used, the SP should be initialized to a location in the data memory not being used for data storage. The stack depth can extend up to 256 bytes.

STC MCU Limited.

3.2.2 On-Chip Expanded RAM / XRAM /AUX-RAM

There are 3840 bytes of additional data RAM available on STC15W4K32S4 series. They may be accessed by the instructions MOVX @Ri or MOVX @DPTR. A control bit – EXTRAM located in AUXR.1 register is to control access of auxiliary RAM. When set, disable the access of auxiliary RAM. When clear (EXTRAM=0), this auxiliary RAM is the default target for the address range from 0x0000 to 0x03FFand can be indirectly accessed by move external instruction, “MOVX @Ri” and “MOVX @DPTR”. If EXTRAM=0 and the target address is over 0x03FF, switches to access external RAM automatically. When EXTRAM=0, the content in DPH is ignored when the instruction MOVX @Ri is executed.

For KEIL-C51 compiler, to assign the variables to be located at Auxiliary RAM, the “pdata” or “xdata” definition should be used. After being compiled, the variables declared by “pdata” and “xdata” will become the memories accessed by “MOVX @Ri” and “MOVX @DPTR”, respectively. Thus the STC15F2K60S2 hardware can access them correctly.

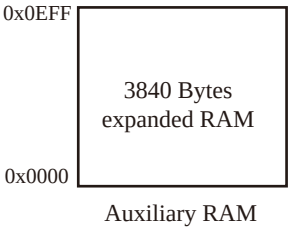

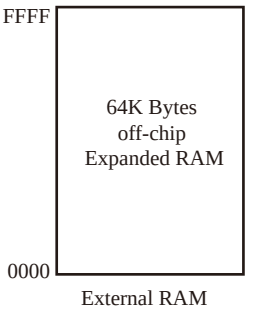

AUXR register

Mnemonic	Add	Name	7	6	5	4	3	2	1	0	Reset Value
AUXR	8EH	Auxiliary Register	T0x12	T1x12	UAR_M0x6	T2R	T2_C/$\overline{T}$	T2x12	EXTRAM	S1ST2	0000,0001

EXTRAM : Internal / external RAM access control bit.

0 : On-chip auxiliary RAM is enabled and located at the address 0x0000 to 0x0EFF.
For address over 0x0EFF, off-chip expanded RAM becomes the target automatically.

1 : On-chip auxiliary RAM is always disabled.

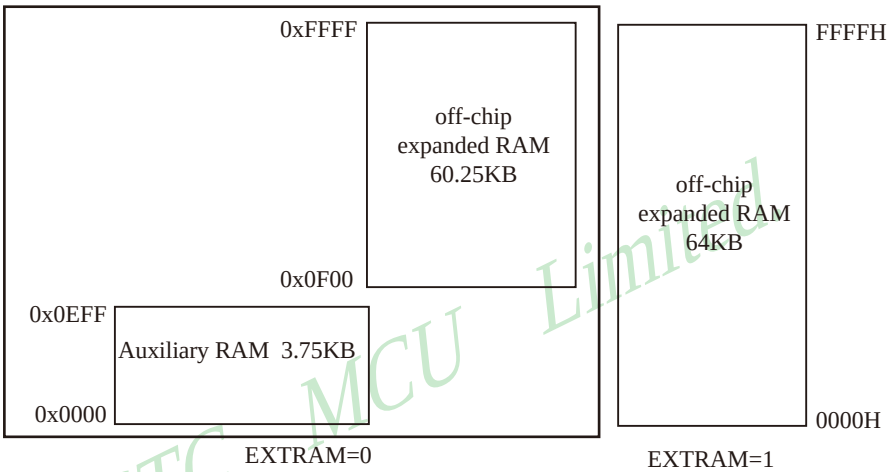

STC MCU Limited

T0x12 : Timer 0 clock source bit.

0 : The clock source of Timer 0 is SYSclk/12. It will compatible to the traditional 8051 MCU

1 : The clock source of Timer 0 is SYSclk/1. It will drive the T0 faster than a traditional 8051 MCU

T1x12 : Timer 1 clock source bit.

0 : The clock source of Timer 1 is SYSclk/12. It will compatible to the traditional 8051 MCU

1 : The clock source of Timer 1 is SYSclk/1. It will drive the T0 faster than a traditional 8051 MCU

UART_M0x6 : Baud rate select bit of UART1 while it is working under Mode-0

0 : The baud-rate of UART in mode 0 is SYSclk/12.

1 : The baud-rate of UART in mode 0 is SYSclk/2.

T2R：Timer 2 Run control bit

0 : not run Timer 2;

1 : run Timer 2.

T2_C/$\overline{T}$: Counter or timer 2 selector

0 : as Timer (namely count on internal system clock)

1 : as Counter (namely count on the external pulse input from T2/P3.1)

T2x12 : Timer 2 clock source bit.

0 : The clock source of Timer 2 is SYSclk/12.

1 : The clock source of Timer 2 is SYSclk/1.

S1ST2 : the control bit that UART1 select Timer 2 as its baud-rate generator.

0 : Select Timer 1 as the baud-rate generator of UART1

1 : Select Timer 2 as the baud-rate generator of UART1. Timer 1 is released to use in other functions.

An example program for internal expanded RAM demo of STC15 series:

```
;/*---------------------------------------------------------------------------*/
;/* --- STC MCU International Limited ---------------------------------------*/
;/* --- STC 1T Series MCU internal expanded RAM Demo ------------------------*/
;/* --- Mobile: (86)13922805190 ----------------------------------------------*/
;/* --- Fax: 86-755-82905966 -------------------------------------------------*/
;/* --- Tel: 86-755-82948412 -------------------------------------------------*/
;/* --- Web: www.STCMCU.com --------------------------------------------------*/
;/* If you want to use the program or the program referenced in the  */
;/* article, please specify in which data and procedures from STC    */
;/*---------------------------------------------------------------------------*/
#include<reg51.h>
#include<intrins.h>                     /* use _nop_( ) function */

sfr         AUXR = 0x8e;

sbit        ERROM_LED = P1^5;
sbit        OK_LED = P1^7;

void  main ( )
{
        unsigned int array_point = 0;

        /*Test-array: Test_array_one[512], Test_array_two[512] */
        unsigned char xdata Test_array_one[512]  =
        {
                0x00,   0x01    0x02,   0x03,   0x04    0x05,   0x06,   0x07,
                0x08,   0x09,   0x0a,   0x0b,   0x0c,   0x0d,   0x0e,   0x0f,
                0x10,   0x11,   0x12,   0x13,   0x14,   0x15,   0x16,   0x17,
                0x18,   0x19,   0x1a,   0x1b,   0x1c,   0x1d,   0x1e,   0x1f,
                0x20,   0x21,   0x22,   0x23,   0x24,   0x25,   0x26,   0x27,
                0x28,   0x29,   0x2a,   0x2b,   0x2c,   0x2d,   0x2e,   0x2f,
                0x30,   0x31,   0x32,   0x33,   0x34,   0x35,   0x36,   0x37,
                0x38,   0x39,   0x3a,   0x3b,   0x3c,   0x3d,   0x3e,   0x3f
                0x40,   0x41,   0x42,   0x43,   0x44,   0x45,   0x46,   0x47,
                0x48,   0x49,   0x4a,   0x4b,   0x4c,   0x4d,   0x4e,   0x4f,
                0x50,   0x51,   0x52,   0x53,   0x54,   0x55,   0x56,   0x57,
                0x58,   0x59,   0x5a,   0x5b,   0x5c,   0x5d,   0x5e,   0x5f,
                0x60,   0x61,   0x62,   0x63,   0x64,   0x65,   0x66,   0x67,
                0x68,   0x69,   0x6a,   0x6b,   0x6c,   0x6d,   0x6e,   0x6f,
                0x70,   0x71,   0x72,   0x73,   0x74,   0x75,   0x76,   0x77,
                0x78,   0x79,   0x7a,   0x7b,   0x7c,   0x7d,   0x7e,   0x7f,
                0x80,   0x81,   0x82,   0x83,   0x84,   0x85,   0x86,   0x87,
                0x88,   0x89,   0x8a,   0x8b,   0x8c,   0x8d,   0x8e,   0x8f,
                0x90,   0x91,   0x92,   0x93,   0x94,   0x95,   0x96,   0x97,
                0x98,   0x99,   0x9a,   0x9b,   0x9c,   0x9d,   0x9e,   0x9f,
                0xa0,   0xa1,   0xa2,   0xa3,   0xa4,   0xa5,   0xa6,   0xa7,
                0xa8,   0xa9,   0xaa,   0xab,   0xac,   0xad,   0xae,   0xaf,
```

STC MCU Limited.

```
        0xb0,   0xb1,   0xb2,   0xb3,   0xb4,   0xb5,   0xb6,   0xb7,
        0xb8,   0xb9,   0xba,   0xbb,   0xbc,   0xbd,   0xbe,   0xbf,
        0xc0,   0xc1,   0xc2,   0xc3,   0xc4,   0xc5,   0xc6,   0xc7,
        0xc8,   0xc9,   0xca,   0xcb   ,0xcc,   0xcd,   0xce,   0xcf,
        0xd0,   0xd1,   0xd2,   0xd3,   0xd4,   0xd5,   0xd6,   0xd7
        0xd8,   0xd9,   0xda,   0xdb,   0xdc,   0xdd,   0xde,   0xdf,
        0xe0,   0xe1,   0xe2,   0xe3,   0xe4,   0xe5,   0xe6,   0xe7,
        0xe8,   0xe9,   0xea,   0xeb,   0xec,   0xed,   0xee,   0xef,
        0xf0,   0xf1,   0xf2,   0xf3,   0xf4,   0xf5,   0xf6,   0xf7,
        0xf8,   0xf9,   0xfa,   0xfb,   0xfc,   0xfd,   0xfe,   0xff,
        0xff,   0xfe,   0xfd,   0xfc,   0xfb,   0xfa,   0xf9,   0xf8,
        0xf7,   0xf6,   0xf5,   0xf4,   0xf3,   0xf2,   0xf1,   0xf0,
        0xef,   0xee,   0xed,   0xec,   0xeb,   0xea,   0xe9,   0xe8,
        0xe7,   0xe6,   0xe5,   0xe4,   0xe3,   0xe2,   0xe1,   0xe0,
        0xdf,   0xde,   0xdd,   0xdc,   0xdb,   0xda,   0xd9,   0xd8,
        0xd7,   0xd6,   0xd5,   0xd4,   0xd3,   0xd2,   0xd1,   0xd0,
        0xcf,   0xce,   0xcd,   0xcc,   0xcb,   0xca,   0xc9,   0xc8,
        0xc7,   0xc6,   0xc5,   0xc4,   0xc3,   0xc2,   0xc1,   0xc0,
        0xbf,   0xbe,   0xbd,   0xbc,   0xbb,   0xba,   0xb9,   0xb8,
        0xb7,   0xb6,   0xb5,   0xb4,   0xb3,   0xb2,   0xb1,   0xb0,
        0xaf,   0xae,   0xad,   0xac,   0xab,   0xaa,   0xa9,   0xa8,
        0xa7,   0xa6,   0xa5,   0xa4,   0xa3,   0xa2,   0xa1,   0xa0,
        0x9f,   0x9e,   0x9d,   0x9c,   0x9b,   0x9a,   0x99,   0x98,
        0x97,   0x96,   0x95,   0x94,   0x93,   0x92,   0x91,   0x90,
        0x8f,   0x8e,   0x8d,   0x8c,   0x8b,   0x8a,   0x89,   0x88,
        0x87,   0x86,   0x85,   0x84,   0x83,   0x82,   0x81,   0x80,
        0x7f,   0x7e,   0x7d,   0x7c,   0x7b,   0x7a,   0x79,   0x78,
        0x77,   0x76,   0x75,   0x74,   0x73,   0x72,   0x71,   0x70,
        0x6f,   0x6e,   0x6d,   0x6c,   0x6b,   0x6a,   0x69,   0x68,
        0x67,   0x66,   0x65,   0x64,   0x63,   0x62,   0x61,   0x60,
        0x5f,   0x5e,   0x5d,   0x5c,   0x5b,   0x5a,   0x59,   0x58,
        0x57,   0x56,   0x55,   0x54,   0x53,   0x52,   0x51,   0x50,
        0x4f,   0x4e,   0x4d,   0x4c,   0x4b,   0x4a,   0x49,   0x48,
        0x47,   0x46,   0x45,   0x44,   0x43,   0x42,   0x41,   0x40,
        0x3f,   0x3e,   0x3d,   0x3c,   0x3b,   0x3a,   0x39,   0x38,
        0x37,   0x36,   0x35,   0x34,   0x33,   0x32,   0x31,   0x30,
        0x2f,   0x2e,   0x2d,   0x2c,   0x2b,   0x2a,   0x29,   0x28,
        0x27,   0x26,   0x25,   0x24,   0x23,   0x22,   0x21,   0x20,
        0x1f,   0x1e,   0x1d,   0x1c,   0x1b,   0x1a,   0x19,   0x18,
        0x17,   0x16,   0x15,   0x14,   0x13,   0x12,   0x11,   0x10,
        0x0f,   0x0e,   0x0d,   0x0c,   0x0b,   0x0a,   0x09,   0x08,
        0x07,   0x06,   0x05,   0x04,   0x03,   0x02,   0x01,   0x00
};

unsigned char xdata Test_array_two[512]  =
{
        0x00,   0x01    0x02,   0x03,   0x04    0x05,   0x06,   0x07,
        0x08,   0x09,   0x0a,   0x0b,   0x0c,   0x0d,   0x0e,   0x0f,
```

STC MCU Limited.

```
0x10,   0x11,   0x12,   0x13,   0x14,   0x15,   0x16,   0x17,
0x18,   0x19,   0x1a,   0x1b,   0x1c,   0x1d,   0x1e,   0x1f,
0x20,   0x21,   0x22,   0x23,   0x24,   0x25,   0x26,   0x27,
0x28,   0x29,   0x2a,   0x2b,   0x2c,   0x2d,   0x2e,   0x2f,
0x30,   0x31,   0x32,   0x33,   0x34,   0x35,   0x36,   0x37,
0x38,   0x39,   0x3a,   0x3b,   0x3c,   0x3d,   0x3e,   0x3f
0x40,   0x41,   0x42,   0x43,   0x44,   0x45,   0x46,   0x47,
0x48,   0x49,   0x4a,   0x4b,   0x4c,   0x4d,   0x4e,   0x4f,
0x50,   0x51,   0x52,   0x53,   0x54,   0x55,   0x56,   0x57,
0x58,   0x59,   0x5a,   0x5b,   0x5c,   0x5d,   0x5e,   0x5f,
0x60,   0x61,   0x62,   0x63,   0x64,   0x65,   0x66,   0x67,
0x68,   0x69,   0x6a,   0x6b,   0x6c,   0x6d,   0x6e,   0x6f,
0x70,   0x71,   0x72,   0x73,   0x74,   0x75,   0x76,   0x77,
0x78,   0x79,   0x7a,   0x7b,   0x7c,   0x7d,   0x7e,   0x7f,
0x80,   0x81,   0x82,   0x83,   0x84,   0x85,   0x86,   0x87,
0x88,   0x89,   0x8a,   0x8b,   0x8c,   0x8d,   0x8e,   0x8f,
0x90,   0x91,   0x92,   0x93,   0x94,   0x95,   0x96,   0x97,
0x98,   0x99,   0x9a,   0x9b,   0x9c,   0x9d,   0x9e,   0x9f,
0xa0,   0xa1,   0xa2,   0xa3,   0xa4,   0xa5,   0xa6,   0xa7,
0xa8,   0xa9,   0xaa,   0xab,   0xac,   0xad,   0xae,   0xaf,
0xb0,   0xb1,   0xb2,   0xb3,   0xb4,   0xb5,   0xb6,   0xb7,
0xb8,   0xb9,   0xba,   0xbb,   0xbc,   0xbd,   0xbe,   0xbf,
0xc0,   0xc1,   0xc2,   0xc3,   0xc4,   0xc5,   0xc6,   0xc7,
0xc8,   0xc9,   0xca,   0xcb   ,0xcc,   0xcd,   0xce,   0xcf,
0xd0,   0xd1,   0xd2,   0xd3,   0xd4,   0xd5,   0xd6,   0xd7
0xd8,   0xd9,   0xda,   0xdb,   0xdc,   0xdd,   0xde,   0xdf,
0xe0,   0xe1,   0xe2,   0xe3,   0xe4,   0xe5,   0xe6,   0xe7,
0xe8,   0xe9,   0xea,   0xeb,   0xec,   0xed,   0xee,   0xef,
0xf0,   0xf1,   0xf2,   0xf3,   0xf4,   0xf5,   0xf6,   0xf7,
0xf8,   0xf9,   0xfa,   0xfb,   0xfc,   0xfd,   0xfe,   0xff,
0xff,   0xfe,   0xfd,   0xfc,   0xfb,   0xfa,   0xf9,   0xf8,
0xf7,   0xf6,   0xf5,   0xf4,   0xf3,   0xf2,   0xf1,   0xf0,
0xef,   0xee,   0xed,   0xec,   0xeb,   0xea,   0xe9,   0xe8,
0xe7,   0xe6,   0xe5,   0xe4,   0xe3,   0xe2,   0xe1,   0xe0,
0xdf,   0xde,   0xdd,   0xdc,   0xdb,   0xda,   0xd9,   0xd8,
0xd7,   0xd6,   0xd5,   0xd4,   0xd3,   0xd2,   0xd1,   0xd0,
0xcf,   0xce,   0xcd,   0xcc,   0xcb,   0xca,   0xc9,   0xc8,
0xc7,   0xc6,   0xc5,   0xc4,   0xc3,   0xc2,   0xc1,   0xc0,
0xbf,   0xbe,   0xbd,   0xbc,   0xbb,   0xba,   0xb9,   0xb8,
0xb7,   0xb6,   0xb5,   0xb4,   0xb3,   0xb2,   0xb1,   0xb0,
0xaf,   0xae,   0xad,   0xac,   0xab,   0xaa,   0xa9,   0xa8,
0xa7,   0xa6,   0xa5,   0xa4,   0xa3,   0xa2,   0xa1,   0xa0,
0x9f,   0x9e,   0x9d,   0x9c,   0x9b,   0x9a,   0x99,   0x98,
0x97,   0x96,   0x95,   0x94,   0x93,   0x92,   0x91,   0x90,
0x8f,   0x8e,   0x8d,   0x8c,   0x8b,   0x8a,   0x89,   0x88,
0x87,   0x86,   0x85,   0x84,   0x83,   0x82,   0x81,   0x80,
0x7f,   0x7e,   0x7d,   0x7c,   0x7b,   0x7a,   0x79,   0x78,
0x77,   0x76,   0x75,   0x74,   0x73,   0x72,   0x71,   0x70,
```

STC MCU Limited.

```
                0x6f,   0x6e,   0x6d,   0x6c,   0x6b,   0x6a,   0x69,   0x68,
                0x67,   0x66,   0x65,   0x64,   0x63,   0x62,   0x61,   0x60,
                0x5f,   0x5e,   0x5d,   0x5c,   0x5b,   0x5a,   0x59,   0x58,
                0x57,   0x56,   0x55,   0x54,   0x53,   0x52,   0x51,   0x50,
                0x4f,   0x4e,   0x4d,   0x4c,   0x4b,   0x4a,   0x49,   0x48,
                0x47,   0x46,   0x45,   0x44,   0x43,   0x42,   0x41,   0x40,
                0x3f,   0x3e,   0x3d,   0x3c,   0x3b,   0x3a,   0x39,   0x38,
                0x37,   0x36,   0x35,   0x34,   0x33,   0x32,   0x31,   0x30,
                0x2f,   0x2e,   0x2d,   0x2c,   0x2b,   0x2a,   0x29,   0x28,
                0x27,   0x26,   0x25,   0x24,   0x23,   0x22,   0x21,   0x20,
                0x1f,   0x1e,   0x1d,   0x1c,   0x1b,   0x1a,   0x19,   0x18,
                0x17,   0x16,   0x15,   0x14,   0x13,   0x12,   0x11,   0x10,
                0x0f,   0x0e,   0x0d,   0x0c,   0x0b,   0x0a,   0x09,   0x08,
                0x07,   0x06,   0x05,   0x04,   0x03,   0x02,   0x01,   0x00
        };

        ERROR_LED = 1;
        OK_LED = 1;
        for (array_point = 0; array_point<512; array_point++)
        {
                if (Test_array_one[array_point] != Test_array_two [array_point])
                {
                        ERROR_LED = 0;
                        OK_LED = 1;
                        break;
                }
                else{
                        OK_LED = 0;
                        ERROR_LED = 1;
                    }
        }
        while (1);
}
```

STC MCU Limited.

3.2.3 External Expandable 64KB RAM (Off-Chip RAM)

There is 64K-byte addressing space available for STC15F2K60S2 to access external data RAM. Just the same as the design in the conventional 8051, the port – P2, P0, ALE/P4.5, P4.2/WR and P4.4/RD have alterative function for external data RAM access. In addition, a new register BUS_SPEED (address: 0xA1) is design to control the acess timimg of "MOVX" instruction. By using BUS_SPEED to change the instruction cycle time, STC15 series MCU can conformed to communicate with both of fast and slow peripheral devices without loss of communication efficiency.

BUS_SPEED register

Mnemonic	Add	Name	B7	B6	B5	B4	B3	B2	B1	B0	Reset Value
BUS_SPEED	A1H	Bus-Speed Control	-	-	-	-	-	-	EXRTS[1:0]		xxxx,xx10

EXRTS (**E**xtend **R**am **T**iming **S**elector)

0 0 : Setup / Hold / Read and Write Duty ← 1 clock cycle; EXRAC ← 1
0 1 : Setup / Hold / Read and Write Duty ← 2 clock cycle; EXRAC ← 2
1 0 : Setup / Hold / Read and Write Duty ← 4 clock cycle; EXRAC ← 4
1 1 : Setup / Hold / Read and Write Duty ← 8 clock cycle; EXRAC ← 8

When the target is on-chip auxiliary RAM, the setting on BUS_SPEED register is discarded by hardware.

AUXR register

Mnemonic	Add	Name	7	6	5	4	3	2	1	0	Reset Value
AUXR	8EH	Auxiliary Register	T0x12	T1x12	UAR_M0x6	T2R	T2_C/$\overline{T}$	T2x12	EXTRAM	S1ST2	0000,0001

EXTRAM : Internal / external RAM access control bit.

0 : On-chip auxiliary RAM is enabled and located at the address 0x0000 to 0x0EFF.
For address over 0x0EFF, off-chip expanded RAM becomes the target automatically.

1 : On-chip auxiliary RAM is always disabled.

Mnemonic	Description	Execution Clocks	Condition (Take STC15W4K32S4 for example, namely on-chip expanded RAM is 3840 byte)
MOVX @DPTR, A	Move Acc to on-chip expanded RAM (16-bit addr). Write operation.	3	the content of DPTR is 0000H ~ 0EFFH (3840 bytes=[4096-256])
MOVX A, @DPTR	Move on-chip expanded RAM(16-bit addr) to Acc. Read operation.	2	the content of DPTR is 0000H ~ 0EFFH (3840 bytes=[4096-256])
MOVX @Ri, A	Move Acc to on-chip expanded RAM(8-bit addr). Write operation.	4	EXTRAM=0
MOVX A, @Ri	Move on-chip expanded RAM(8-bit addr) to Acc. Read operation	3	EXTRAM=0

STC MCU Limited

Mnemonic	Description	Execution Clocks	Condition (Take STC15W4K32S4 for example, namely on-chip expanded RAM is 3840 byte)
MOVX @Ri, A	Move Acc to External RAM(8-bit addr). Write operation.	8	EXRTS[1:0] = [0,0], EXTRAM=1
MOVX A, @Ri	Move Acc to External RAM(8-bit addr). Read operation.	7	EXRTS[1:0] = [0,0], EXTRAM=1
MOVX @Ri, A	Move Acc to External RAM(8-bit addr). Write operation.	13	EXRTS[1:0] = [0,1], EXTRAM=1
MOVX A, @Ri	Move Acc to External RAM(8-bit addr). Read operation.	12	EXRTS[1:0] = [0,1], EXTRAM=1
MOVX @Ri, A	Move Acc to External RAM(8-bit addr). Write operation.	23	EXRTS[1:0] = [1,0], EXTRAM=1
MOVX A, @Ri	Move Acc to External RAM(8-bit addr). Read operation.	22	EXRTS[1:0] = [1,0], EXTRAM=1
MOVX @Ri, A	Move Acc to External RAM(8-bit addr). Write operation.	43	EXRTS[1:0] = [1,1], EXTRAM=1
MOVX A, @Ri	Move Acc to External RAM(8-bit addr). Read operation.	42	EXRTS[1:0] = [1,1], EXTRAM=1
Note: Ri means R1 and R0 in above table.			

Mnemonic	Description	Execution Clocks	Condition (Take STC15W4K32S4 for example, namely on-chip expanded RAM is 3840 byte)
MOVX @DPTR, A	Move Acc to External RAM (16-bit addr). Write operation.	7	EXRTS[1:0] = [0,0], DPTR>=3840 namely (4096-256) or EXTRAM=1
MOVX A, @DPTR	Move External RAM(16-bit addr) to Acc. Read operation.	6	EXRTS[1:0] = [0,0], DPTR>=3840 namely (4096-256) or EXTRAM=1
MOVX @DPTR, A	Move Acc to External RAM (16-bit addr). Write operation.	12	EXRTS[1:0] = [0,1], DPTR>=3840 namely (4096-256) or EXTRAM=1
MOVX A, @DPTR	Move External RAM(16-bit addr) to Acc. Read operation.	11	EXRTS[1:0] = [0,1], DPTR>=3840 namely (4096-256) or EXTRAM=1
MOVX @DPTR, A	Move Acc to External RAM (16-bit addr). Write operation.	22	EXRTS[1:0] = [1,0], DPTR>=3840 namely (4096-256) or EXTRAM=1
MOVX A, @DPTR	Move External RAM(16-bit addr) to Acc. Read operation.	21	EXRTS[1:0] = [1,0], DPTR>=3840 namely (4096-256) or EXTRAM=1
MOVX @DPTR, A	Move Acc to External RAM (16-bit addr). Write operation.	42	EXRTS[1:0] = [1,1], DPTR>=3840 namely (4096-256) or EXTRAM=1

STC MCU Limited.

The excution clocks of acessing external RAM is computed as the following formula：

MOVX @R0/R1

write： 5×N+3

read ： 5×N+2

MOVX @DPTR

write ：5×N+2

read ： 5×N+1

When EXRTS[1:0] = [0,0], N=1 in above formula;
When EXRTS[1:0] = [0,1], N=2 in above formula;
When EXRTS[1:0] = [1,0], N=4 in above formula;
When EXRTS[1:0] = [1,1], N=8 in above formula;

Thus it can be seen that the speed of instruction acessing external RAM is adjustable for STC15 series MCU.

Timing diagram

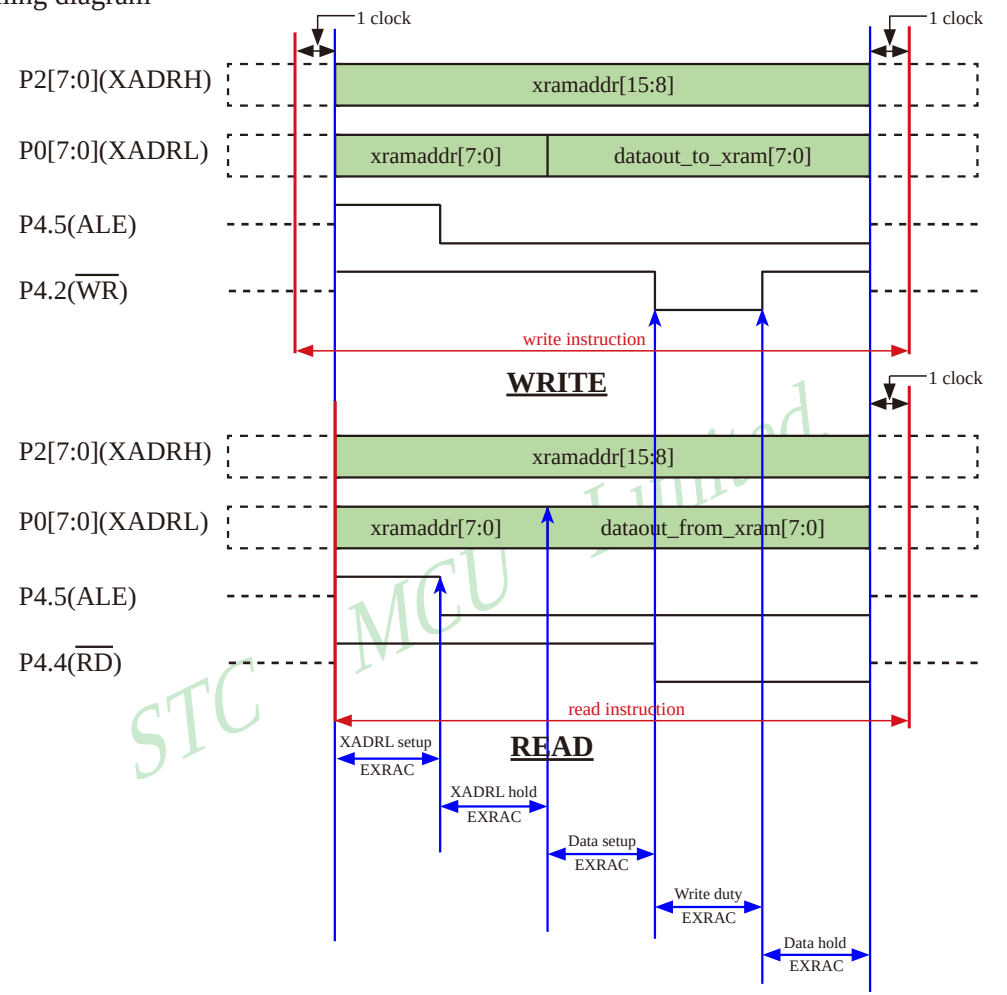

3.2.4 Application Circuit Expanding 32K SRAM by Parallel Bus

External expanded 32K SRAM

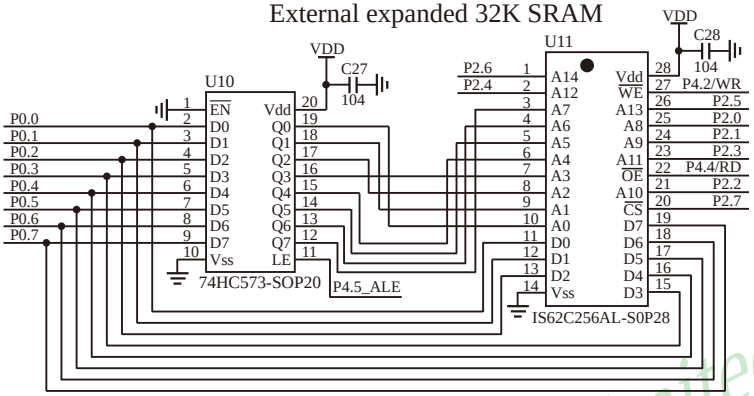

Note: the package size of IS62C256AL-SOP28 is wider than STC-SOP28

STC MCU Limited.

3.3 Special Function Registers

3.3.1 Special Function Registers Address Map

	0/8	1/9	2/A	3/B	4/C	5/D	6/E	7/F	
0F8H	P7 1111,1111	CH 0000,0000	CCAP0H 0000,0000	CCAP1H 0000,0000	CCAP2H 0000,0000				0FFH
0F0H	B 0000,0000		PCA_PWM0 00xx,xx00	PCA_PWM1 00xx,xx00	PCA_PWM2 00xx,xx00				0F7H
0E8H	P6 1111,1111	CL 0000,0000	CCAP0L 0000,0000	CCAP1L 0000,0000	CCAP2L 0000,0000				0EFH
0E0H	ACC 0000,0000	P7M1 0000,0000	P7M0 0000,0000						0E7H
0D8H	CCON 00xx,0000	CMOD 0xxx,x000	CCAPM0 x000,0000	CCAPM1 x000,0000	CCAPM2 x000,0000				0DFH
0D0H	PSW 0000,00x0	T4T3M 0000,0000	T4H RL_TH4 0000,0000	T4L RL_TL4 0000,0000	T3H RL_TH3 0000,0000	T3L RL_TL3 0000,0000	T2H RL_TH2 0000,0000	T2L RL_TL2 0000,0000	0D7H
0C8H	P5 xxxx,1111	P5M1 xxxx,0000	P5M0 xxxx,0000	P6M1 0000,0000	P6M0 0000,0000	SPSTAT 00xx,xxxx	SPCTL 0000,0100	SPDAT 0000,0000	0CFH
0C0H	P4 1111,1111	WDT_CONTR 0x00,0000	IAP_DATA 1111,1111	IAP_ADDRH 0000,0000	IAP_ADDRL 0000,0000	IAP_CMD xxxx,xx00	IAP_TRIG xxxx,xxxx	IAP_CONTR 0000,0000	0C7H
0B8H	IP x0x0,0000	SADEN 1111,1111	P_SW2 xxxx,x000		ADC_CONTR 0000,0000	ADC_RES 0000,0000	ADC_RESL 0000,0000		0BFH
0B0H	P3 1111,1111	P3M1 0000,0000	P3M0 0000,0000	P4M1 0000,0000	P4M0 0000,0000	IP2 xxxx,xx00	IP2H xxxx,xx00	IPH 0000,0000	0B7H
0A8H	IE 0000,0000	SADDR 0000,0000	WKTCL WKTCL_CNT 0111 1111	WKTCH WKTCH_CNT 0111 1111	S3CON 0000,0000	S3BUF xxxx,xxxx		IE2 x000,0000	0AFH
0A0H	P2 1111,1111	BUS_SPEED xxxx,xx10	AUXR1 P_SW1 0100,0000	Don't use	Don't use	Don't use		Don't use	0A7H
098H	SCON 0000,0000	SBUF xxxx,xxxx	S2CON 0000,0000	S2BUF xxxx,xxxx	Don't use	P1ASF 0000,0000	Don't use	Don't use	09FH
090H	P1 1111,1111	P1M1 0000,0000	P1M0 0000,0000	P0M1 0000,0000	P0M0 0000,0000	P2M1 0000,0000	P2M0 0000,0000	CLK_DIV PCON2	097H
088H	TCON 0000,0000	TMOD 0000,0000	TL0 RL_TL0 0000,0000	TL1 RL_TL1 0000,0000	TH0 RL_TH0 0000,0000	TH1 RL_TH1 0000,0000	AUXR 0000,0001	INT_CLKO AUXR2 0000 0000	08FH
080H	P0 1111,1111	SP 0000,0111	DPL 0000,0000	DPH 0000,0000	S4CON 0000,0000	S4BUF xxxx,xxxx		PCON 0011,0000	087H
	0/8	1/9	2/A	3/B	4/C	5/D	6/E	7/F	

Bit Addressable

Non Bit Addressable

STC MCU Limited.

3.3.2 Special Function Registers Bits Description

Symbol	Description	Address	Bit Address and Symbol MSB LSB								Value after Power-on or Reset
P0	Port 0	80H	P0.7	P0.6	P0.5	P0.4	P0.3	P0.2	P0.1	P0.0	1111 1111B
SP	Stack Pointer	81H									0000 0111B
DPTR DPL	Data Pointer Low	82H									0000 0000B
DPTR DPH	Data Pointer High	83H									0000 0000B
S4CON	S4 Control	84H	S4SM0	S4ST4	S4SM2	S4REN	S4TB8	S4RB8	S4TI	S4RI	0000,0000B
S4BUF	S4 Serial Buffer	85H									xxxx,xxxxB
PCON	Power Control	87H	SMOD	SMOD0	LVDF	POF	GF1	GF0	PD	IDL	0011 0000B
TCON	Timer Control	88H	TF1	TR1	TF0	TR0	IE1	IT1	IE0	IT0	0000 0000B
TMOD	Timer Mode	89H	GATE	C/$\overline{T}$	M1	M0	GATE	C/$\overline{T}$	M1	M0	0000 0000B
TL0	Timer Low 0	8AH									0000 0000B
TL1	Timer Low 1	8BH									0000 0000B
TH0	Timer High 0	8CH									0000 0000B
TH1	Timer High 1	8DH									0000 0000B
AUXR	Auxiliary register	8EH	T0x12	T1x12	UART_M0x6	T2R	T2_C/$\overline{T}$	T2x12	EXTRAM	S1ST2	0000 0001B
INT_CLKO AUXR2	CLK_Output and External Interrupt enable register	8FH	-	EX4	EX3	EX2	-	T2CLKO	T1CLKO	T0CLKO	x000 x000B
P1	Port 1	90H	P1.7	P1.6	P1.5	P1.4	P1.3	P1.2	P1.1	P1.0	1111 1111B
P1M1	P1 configuration 1	91H									0000 0000B
P1M0	P1 configuration 0	92H									0000 0000B
P0M1	P0 configuration 1	93H									0000 0000B
P0M0	P0 configuration 0	94H									0000 0000B
P2M1	P2 configuration 1	95H									0000 0000B
P2M0	P2 configuration 0	96H									0000 0000B
CLK_DIV PCON2	Clock Divder	97H	MCKO_S1	MCKO_S1	ADRJ	Tx_Rx	MCLKO_2	CLKS2	CLKS1	CLKS0	0000 0000B
SCON	Serial Control	98H	SM0/FE	SM1	SM2	REN	TB8	RB8	TI	RI	0000 0000B
SBUF	Serial Buffer	99H									xxxx xxxxB
S2CON	S2 Control	9AH	S2SM0	-	S2SM2	S2REN	S2TB8	S2RB8	S2TI	S2RI	0x00 0000B
S2SBUF	S2 Serial Buffer	9BH									xxxx xxxxB
BRT	dedicated Baud-Rate Timer	9CH									0000 0000B
P1ASF	P1 Analog Special Function	9DH	P17ASF	P16ASF	P15ASF	P14ASF	P13ASF	P12ASF	P11ASF	P10ASF	0000 0000B
P2	Port 2	A0H	P2.7	P2.6	P2.5	P2.4	P2.3	P2.2	P2.1	P2.0	1111 1111B
BUS_SPEED	Bus-Speed Control	A1H	-	-	-	-	-	-	EXRTS[1:0]		xxxx xx10B
AUXR1 P_SW1	Auxiliary register1	A2H	S1_S1	S1_S0	CCP_S1	CCP_S0	SPI_S1	SPI_S0	0	DPS	0100 0000B
IE	Interrupt Enable	A8H	EA	ELVD	EADC	ES	ET1	EX1	ET0	EX0	0000 0000B

STC MCU Limited

Symbol	Description	Address	Bit Address and Symbol MSB LSB								Value after Power-on or Reset
IE	Interrupt Enable	A8H	EA	ELVD	EADC	ES	ET1	EX1	ET0	EX0	0000 0000B
SADDR	Slave Address	A9H									0000 0000B
WKTCL WKTCL_CNT	Power-Down Wake-up Timer Control register low	AAH									1111 1111B
WKTCH WKTCH_CNT	Power-Down Wake-up Timer Control register high	ABH	WKTEN								0111 1111B
S3CON	S3 Control	ACH	S3SM0	S3ST3	S3SM2	S3REN	S3TB8	S3RB8	S3TI	S3RI	0000,0000B
S3BUF	S3 Serial Buffer	ADH									xxxx,xxxxB
IE2	Interrupt Enable 2	AFH		ET4	ET3	ES4	ES3	ET2	ESPI	ES2	x000 0000B
P3	Port 3	B0H	P3.7	P3.6	P3.5	P3.4	P3.3	P3.2	P3.1	P3.0	1111 1111B
P3M1	P2 configuration 1	B1H									0000 0000B
P3M0	P3 configuration 0	B2H									0000 0000B
P4M1	P4 configuration 1	B3H									0000 0000B
P4M0	P4 configuration 0	B4H									0000 0000B
IP2	2rd Interrupt Priority Low register	B5H	-	-	-	-	-	-	PSPI	PS2	xxxx xx00B
IP	Interrupt Priority Low	B8H	PPCA	PLVD	PADC	PS	PT1	PX1	PT0	PX0	0000 0000B
SADEN	Slave Address Mask	B9H									0000 0000B
P_SW2	Peripheral Function Switch register 2	BAH	-	-	-	-	-	S4_S	S3_S	S2_S	xxxx x000B
ADC_CONTR	ADC Control	BCH	ADC_POWER	SPEED1	SPEED0	ADC_FLAG	ADC_START	CHS2	CHS1	CHIS0	0000 0000B
ADC_RES	ADC Result	BDH									0000 0000B
ADC_RESL	ADC Result Low	BEH									0000 0000B
P4	Port 4	C0H	P4.7	P4.6	P4.5	P4.4	P4.3	P4.2	P4.1	P4.0	1111 1111B
WDT_CONTR	Watch-Dog-Timer Control Register	C1H	WDT_FLAG	-	EN_WDT	CLR_WDT	IDLE_WDT	PS2	PS1	PS0	xx00 0000B
IAP_DATA	ISP/IAP Flash Data Register	C2H									1111 1111B
IAP_ADDRH	ISP/IAP Flash Address High	C3H									0000 0000B
IAP_ADDRL	ISP/IAP Flash Address Low	C4H									0000 0000B
IAP_CMD	ISP/IAP Flash Command Register	C5H	-	-	-	-	-	-	MS1	MS0	xxxx x000B
IAP_TRIG	ISP/IAP Flash Command Trigger	C6H									xxxx xxxxB
IAP_CONTR	ISP/IAP Control Register	C7H	IAPEN	SWBS	SWRST	CMD_FAIL	-	WT2	WT1	WT0	0000 x000B
P5	Port 5	C8H	-	-	P5.5	P5.4	P5.3	P5.2	P5.1	P5.0	xxxx 1111B
P5M1	P5 Configuration 1	C9H									0000 0000B
P5M0	P5 Configuration 0	CAH									0000 0000B

STC MCU Limited.

Symbol	Description	Address	Bit Address and Symbol MSB LSB								Value after Power-on or Reset
P6M1	P6 Configuration 1	CBH									
P6M0	P6 Configuration 0	CCH									
SPSTAT	SPI Status register	CDH	SPIF	WCOL	-	-	-	-	-	-	00xx xxxxB
SPCTL	SPI control register	CEH	SSIG	SPEN	DORD	MSTR	CPOL	CPHA	SPR1	SPR0	0000 0100B
SPDAT	SPI Data register	CFH	-	-	-	-	-	-	-	-	0000 0000B
PSW	Program Status Word	D0H	CY	AC	F0	RS1	RS0	OV	F1	P	0000 0000B
T4T3M	T4 and T3 mode register	D1H	T4R	T4_C/$\overline{T}$	T4x12	T4CLKO	T3R	T3_C/$\overline{T}$	T3x12	T3CLKO	0000 0000B
T4H	Timer 4 high 8-bit register	D2H									0000 0000B
T4L	Timer 4 low 8-bit register	D3H									0000 0000B
T3H	Timer 3 high 8-bit register	D4H									0000 0000B
T3L	Timer 3 low 8-bit register	D5H									0000 0000B
T2H	Timer 2 high 8-bit register	D6H									0000 0000B
T2L	Timer 2 low 8-bit register	D7H									0000 0000B
CCON	PCA Control Register	D8H	CF	CR	-	-	CCF3	CCF2	CCF1	CCF0	00xx 0000B
CMOD	PCA Mode Register	D9H	CIDL	-	-	-	CPS2	CPS1	CPS0	ECF	00xx 0000B
CCAPM0	PCA Module 0 Mode Register	DAH	-	ECOM0	CAPP0	CAPN0	MAT0	TOG0	PWM0	ECCF0	x000 0000B
CCAPM1	PCA Module 1 Mode Register	DBH	-	ECOM1	CAPP1	CAPN1	MAT1	TOG1	PWM1	ECCF1	x000 0000B
CCAPM2	PCA Module 2 Mode Register	DCH	-	ECOM2	CAPP2	CAPN2	MAT2	TOG2	PWM2	ECCF2	x000 0000B
ACC	Accumulator	E0H									0000 0000B
P7M1	P7 configuration 1	E1H									
P7M0	P7 configuration 0	E2H									
P6	Port 6	E8H									
CL	PCA Base Timer Low	E9H									0000 0000B
CCAP0L	PCA module 0 capture register low	EAH									0000 0000B
CCAP1L	PCA module 1 capture register low	EBH									0000 0000B
CCAP2L	PCA Module-2 Capture Register Low	ECH									0000 0000B
B	B Register	F0H									0000 0000B

STC MCU Limited.

Symbol	Description	Address	Bit Address and Symbol MSB LSB								Value after Power-on or Reset
PCA_PWM0	PCA PWM Mode Auxiliary Register 0	F2H	EBS0_1	EBS0_0	-	-	-	-	EPC0H	EPC0L	xxxx xx00B
PCA_PWM1	PCA PWM Mode Auxiliary Register 1	F3H	EBS1_1	EBS1_0	-	-	-	-	EPC1H	EPC1L	xxxx xx00B
PCA_PWM2	PCA PWM Mode Auxiliary Register 2	F4H	EBS2_1	EBS2_0	-	-	-	-	EPC2H	EPC2L	xxxx xx00B
P7	Port 7	F8H									
CH	PCA Base Timer High	F9H									0000 0000B
CCAP0H	PCA Module-0 Capture Register High	FAH									0000 0000B
CCAP1H	PCA Module-1 Capture Register High	FBH									0000 0000B
CCAP2H	PCA Module-2 Capture Register High	FCH									0000 0000B

Some common SFRs of traditional 8051 are shown as below.

Accumulator

ACC is the Accumulator register. The mnemonics for accumulator-specific instructions, however, refer to the accumulator simply as A.

B-Register

The B register is used during multiply and divide operations. For other instructions it can be treated as another scratch pad register.

Stack Pointer

The Stack Pointer register is 8 bits wide. It is incrementde before data is stored during PUSH and CALL executions. While the stack may reside anywhee in on-chip RAM, the Stack Pointer is initialized to 07H after a reset. Therefore, the first value pushed on the stack is placed at location 0x08, which is also the first register (R0) of register bank 1. Thus, if more than one register bank is to be used, the SP should be initialized to a location in the data memory not being used for data storage. The stack depth can extend up to 256 bytes.

Program Status Word(PSW)

The program status word(PSW) contains several status bits that reflect the current state of the CPU. The PSW, shown below, resides in the SFR space. It contains the Carry bit, the Auxiliary Carry(for BCD operation), the two register bank select bits, the Overflow flag, a Parity bit and two user-definable status flags.

The Carry bit, other than serving the function of a Carry bit in arithmetic operations, also serves as the “Accumulator” for a number of Boolean operations.

The bits RS0 and RS1 are used to select one of the four register banks shown in the previous page. A number of instructions refer to these RAM locations as R0 through R7.

The Parity bit reflects the number of 1s in the Accumulator. P=1 if the Accumulator contains an odd number of 1s and otherwise P=0.

STC MCU Limited.

PSW register

SFR name	Address	bit	B7	B6	B5	B4	B3	B2	B1	B0
PSW	D0H	name	CY	AC	F0	RS1	RS0	OV	F1	P

CY : Carry flag.
This bit is set when the last arithmetic operation resulted in a carry (addition) or a borrow (subtrac-tion). It is cleared to logic 0 by all other arithmetic operations.

AC : Auxilliary Carry Flag.(For BCD operations)
This bit is set when the last arithmetic operation resulted in a carry into (addition) or a borrow from (subtraction) the high order nibble. It is cleared to logic 0 by all other arithmetic operations

F0 : Flag 0.(Available to the user for general purposes)

RS1: Register bank select control bit 1.
RS0: Register bank select control bit 0.
[RS1 RS0] select which register bank is used during register accesses

RS1	RS0	Working Register Bank(R0~R7) and Address
0	0	Bank 0(00H~07H)
0	1	Bank 1(08H~0FH)
1	0	Bank 2(10H~17H)
1	1	Bank 3(18H~1FH)

OV : Overflow flag.
This bit is set to 1 under the following circumstances:
• An ADD, ADDC, or SUBB instruction causes a sign-change overflow.
• A MUL instruction results in an overflow (result is greater than 255).
• A DIV instruction causes a divide-by-zero condition.
The OV bit is cleared to 0 by the ADD, ADDC, SUBB, MUL, and DIV instructions in all other cases.

F1 : Flag 1. User-defined flag.

P : Parity flag.
This bit is set to logic 1 if the sum of the eight bits in the accumulator is odd and cleared if the sum is even.

STC MCU Limited.

3.3.3 Dual Data Pointer Register (DPTR)

The Data Pointer (DPTR) consists of a high byte (DPH) and a low byte (DPL). Its intended function is to hold a 16-bit address. It may be manipulated as a 16-bit register or as two independent 8-bit registers.

For fast data movement, STC152K60S2 series MCU supports two data pointers. They share the same SFR address and are switched by the register bit – DPS/AUXR.0.

AUXR1 register

Mnemonic	Address	Name	7	6	5	4	3	2	1	0	Reset Value
AUXR1 P_SW1	A2H	Auxiliary Register 1	S1_S1	S1_S0	CCP_S1	CCP_S0	SPI_S1	SPI_S0	0	DPS	0100,0000

DPS : DPTR registers select bit.

0 : Default. DPTR0 is selected as Data pointer.

1 : The secondary DPTR is switched to use.

The following program is an assembly program that demonstrates how the dual data pointer be used.

```
AUXR1       DATA    0A2H        ;Define special function register AUXR1
MOV         AUXR1,  #0          ;DPS=0, select DPTR0

MOV         DPTR,   #1FFH       ;Set DPTR0 for 1FFH
MOV         A,      #55H
MOVX        @DPTR,  A           ;load the value 55H in the 1FFH unit

MOV         DPTR,   #2FFH       ;Set DPTR0 for 2FFH
MOV         A,      #0AAH
MOVX        @DPTR,  A           ;load the value 0AAH in the 2FFH unit

INC         AUXR1               ;DPS=1, DPTR1 is selected
MOV         DPTR,   #1FFH       ;Set DPTR1 for 1FFH
MOVX        A,      @DPTR       ;Get the content of 1FFH unit
                                ;which is pointed by DPTR1,
                                ;the content of Accumulator has changed for 55H
INC         AUXR1               ;DPS=0, DPTR0 is selected
MOVX        A,      @DPTR       ;Get the content of 2FFH unit
                                ;which is pointed by DPTR0,
                                ;the content of Accumulator has changed for 0AAH
INC         AUXR1               ;DPS=1, DPTR1 is selected
MOVX        A,      @DPTR       ;Get the content of 1FFH unit
                                ;which is pointed by DPTR1,
                                ;the content of Accumulator has changed for 55H
INC         AUXR1               ;DPS=0, DPTR0 is selected
MOVX        A,      @DPTR       ;Get the content of 2FFH unit
                                ;which is pointed by DPTR0,
                                ;the content of Accumulator has changed for 0AAH
```

STC MCU Limited.

Chapter 4 Configurable I/O Ports of STC15 series MCU

4.1 I/O Ports Configurations

STC15 series MCU owns 46 I/O ports (such as 48-pin MCU), at most. The 46 I/O ports are P0.0~P0.7, P1.0~P1.7, P2.0~P2.7, P3.0~P3.7, P4.0~P4.7 and P5.0~P5.5. All I/O ports of STC15 series MCU may be independently configured to one of four modes by setting the corresponding bit in two mode registers PxMn (x= 0 ~ 5, n = 0, 1).The four modes are quasi-bidirectional (traditional 8051 port output), push-pull output, input-only and open-drain output. All port pins default to quasi-bidirectional after reset. Each one has a Schmitt-triggered input for improved input noise rejection. Any port can drive 20mA current, but it had better drive lower than 120mA currentt that he whole chip of 40-pin or more than 40-pin MCU, while 90mA that the whole chip of 16-pin or more than 16-pin MCU or 32-pin or less than 32-pin MCU .

Configure I/O ports mode

P5 Configure <x, x, P5.5, P5.4, P5.3, P5.2, P5.1, P5.0 port> (P5 address：C8H)

P5M1[5 : 0]	P5M0 [5 : 0]	I/O ports Mode
0	0	quasi_bidirectional(traditional 8051 I/O port output), Sink Current up to 20mA , pull-up Current is 270μA , Because of manufactured error, the actual pull-up current is 270uA ~ 150uA
0	1	push-pull output(strong pull-up output, current can be up to 20mA, resistors need to be added to restrict current
1	0	input-only (high-impedance)
1	1	Open Drain, internal pull-up resistors should be disabled and external pull-up resistors need to join.

STC MCU Limited.

Example: MOV P5M1, #00101000B
MOV P5M0, #00110000B
;P5.5 in Open Drain mode, P5.4 in strong push-pull output, P5.3 in high-impedance input, P5.2/P5.1P5.0 in quasi_bidirectional/weak pull-up

P4 Configure <P4.7, P4.6, P4.5, P4.4, P4.3, P4.2, P4.1, P4.0 port> (P4 address：C0H)

P4M1[7 : 0]	P4M0 [7 : 0]	I/O ports Mode
0	0	quasi_bidirectional(traditional 8051 I/O port output), Sink Current up to 20mA , pull-up Current is 270μA , Because of manufactured error, the actual pull-up current is 270uA ~ 150uA
0	1	push-pull output(strong pull-up output, current can be up to 20mA, resistors need to be added to restrict current
1	0	input-only (high-impedance)
1	1	Open Drain, internal pull-up resistors should be disabled and external pull-up resistors need to join.

Example: MOV P4M1, #10100000B
MOV P4M0, #11000000B
;P4.7 in Open Drain mode, P4.6 in strong push-pull output, P4.5 in high-impedance input, P4.4/P4.3/P4.2/ P4.1/P4.0 in quasi_bidirectional/weak pull-up

P3 Configure <P3.7, P3.6, P3.5, P3.4, P3.3, P3.2, P3.1, P3.0 port> (P3 address：B0H)

P3M1[7 : 0]	P3M0 [7 : 0]	I/O ports Mode
0	0	quasi_bidirectional(traditional 8051 I/O port output）， Sink Current up to 20mA , pull-up Current is 270μA , Because of manufactured error, the actual pull-up current is 270uA ~ 150uA
0	1	push-pull output(strong pull-up output，current can be up to 20mA, resistors need to be added to restrict current
1	0	input-only (high-impedance)
1	1	Open Drain，internal pull-up resistors should be disabled and external pull-up resistors need to join.

Example: MOV P3M1, #10100000B
MOV P3M0, #11000000B
;P3.7 in Open Drain mode, P3.6 in strong push-pull output, P3.5 in high-impedance input, P3.4/P3.3/P3.2/P3.1/P3.0 in quasi_bidirectional/weak pull-up

P2 Configure <P2.7, P2.6, P2.5, P2.4, P2.3, P2.2, P2.1, P2.0 port> (P2 address：A0H)

P2M1[7 : 0]	P2M0 [7 : 0]	I/O ports Mode
0	0	quasi_bidirectional(traditional 8051 I/O port output）， Sink Current up to 20mA , pull-up Current is 270μA , Because of manufactured error, the actual pull-up current is 270uA ~ 150uA
0	1	push-pull output(strong pull-up output，current can be up to 20mA, resistors need to be added to restrict current
1	0	input-only (high-impedance)
1	1	Open Drain，internal pull-up resistors should be disabled and external pull-up resistors need to join.

Example: MOV P2M1, #10100000B
MOV P2M0, #11000000B
;P2.7 in Open Drain mode, P2.6 in strong push-pull output, P2.5 in high-impedance input, P2.4/P2.3/P2.2/P2.1/P2.0 in quasi_bidirectional/weak pull-up

P1 Configure <P1.7, P1.6, P1.5, P1.4, P1.3, P1.2, P1.1, P1.0 port> (P1 address：90H)

P1M1[7 : 0]	P1M0 [7 : 0]	I/O ports Mode
0	0	quasi_bidirectional(traditional 8051 I/O port output）， Sink Current up to 20mA , pull-up Current is 270μA , Because of manufactured error, the actual pull-up current is 270uA ~ 150uA
0	1	push-pull output(strong pull-up output，current can be up to 20mA, resistors need to be added to restrict current
1	0	input-only (high-impedance)
1	1	Open Drain，internal pull-up resistors should be disabled and external pull-up resistors need to join.

Example: MOV P1M1, #10100000B
MOV P1M0, #11000000B
;P1.7 in Open Drain mode, P1.6 in strong push-pull output, P1.5 in high-impedance input, P1.4/P1.3/P1.2/P1.1/P1.0 in quasi_bidirectional/weak pull-up

STC MCU Limited.

P0 Configure <P0.7, P0.6, P0.5, P0.4, P0.3, P0.2, P0.1, P0.0 port> (P0 address：80H)

P0M1[7 : 0]	P0M0 [7 : 0]	I/O ports Mode
0	0	quasi_bidirectional (traditional 8051 I/O port output）， Sink Current up to 20mA , pull-up Current is 270μA , Because of manufactured error, the actual pull-up current is 270uA ~ 150uA
0	1	push-pull output(strong pull-up output，current can be up to 20mA, resistors need to be added to restrict current
1	0	input-only (high-impedance)
1	1	Open Drain，internal pull-up resistors should be disabled and external pull-up resistors need to join.

Example: MOV P0M1, #10100000B
MOV P0M0, #11000000B
;P0.7 in Open Drain mode, P0.6 in strong push-pull output, P0.5 in high-impedance input, P0.4/P0.3/P0.2/P0.1/P0.0 in quasi_bidirectional/weak pull-up

STC MCU Limited.

4.2 Special Explanation of P1.7/XTAL1 and P1.6/XTAL2 pin

All I/O ports default to quasi-bidirectional / weak-pull after power-on reset. But P1.7/XTAL1 and P1.6/XTAL2 are not necessarily in quasi-two-dimensional / weak-pull mode after power-on reset due to P1.7 and P1.6 also can be used as external crystal or clock pins XTAL1 and XTAL2. When P1.7/XTAL1 and P1.6/XTAL2 are used as XTAL1 and XTAL2, they are in high impedance input mode after power-on reset

The mode of P1.7/XTAL1 and P1.6/XTAL2 is set according to the following steps after each power-on reset :

First, P1.7/XTAL1 and P1.6/XTAL2 will be set to high impedance input mode in a short time;

Then, MCU will automatically determine the setting of P1.7/XTAL1 and P1.6/XTAL2 what the user do in STC-ISP Writer / Programmer last time;

If P1.7/XTAL1 and P1.6/XTAL2 were set to the common I/O ports in STC-ISP Writer / Programmer last time, they would be in quasi-bidirectional / weak pull-up mode after power-on reset;

If P1.7/XTAL1 and P1.6/XTAL2 were set to XTAL1 and XTAL2 in STC-ISP Writer / Programmer last time, they would be in high impedance input mode after power-on reset.

4.3 Special Explanation of RST pin

The reset pin is on RST/P3.4 for STC15 series 8-pin MCU (such as STC15F101W series). While it is on RST/P5.4 for 16-pin or more than 16-pin MCU(such as STC15F2K60S2, STC15W4K32S4 and so on). Now take RST/P5.4 for example to introduce reset pin.

P5.4/RST (or P3.4/RST) pin factory defaults to the I/O port, which can be set as RST reset pin(active high) through the STC-ISP Writer / Programmer. If it is as I/O port, it will be in quasi-bidirectional / weak pull-up mode after power-on reset. MCU will automatically determine the setting of P5.4/RST what the user do in STC-ISP Writer / Programmer last time after each power-on reset. If P5.4/RST were set to the common I/O port in STC-ISP Writer / Programmer last time, it would be in quasi-bidirectional / weak pull-up mode after power-on reset. If P5.4/RST were set to Reset pin in STC-ISP Writer / Programmer last time, they would be still as reset pin after power-on reset.

STC MCU Limited.

4.4 Special Explanation of RSTOUT_LOW pin

The output low after reset pin is on RSTOUT_LOW/P3.3 for STC15 series 8-pin MCU (such as STC15F101W series). While it is on RSTOUT_LOW/P1.0 for 16-pin MCU (such as STC15W10x series) and on RSTOUT_LOW/P2.0 for more than 16-pin MCU(such as STC15F2K60S2, STC15W4K32S4 and so on). Now take RSTOUT_LOW/P2.0 for example to introduce reset pin.

P2.0/RSTOUT_LOW pin can output low or high after power-on reset. When the operation voltage Vcc is higher than power-on reset threshold voltage (POR), users can set whether the P2.0/RSTOUT_LOW pin output low or high in STC-ISP Writer/Programmer.

When the operation voltage Vcc is lower than power-on reset threshold voltage (POR), P2.0/RSTOUT_LOW pin output low. For 3V chip, the power-on reset threshold voltage (POR) is about 1.8V. For 5V chip, the power-on reset threshold voltage (POR) is about 3.2V. When the operation voltage Vcc is higher than power-on reset threshold voltage (POR), MCU will automatically determine the setting in STC-ISP Writer / Programmer last time after each power-on reset. If P2.0/RSTOUT_LOW pin was set to output low after each power-on reset in STC-ISP Writer / Programmer last time, P2.0/RSTOUT_LOW pin will output low. If P2.0/RSTOUT_LOW pin was set to output high after each power-on reset in STC-ISP Writer / Programmer last time, P2.0/RSTOUT_LOW pin will output high.

4.5 Relay Boadcast Mode of UART1

the RxD and TxD of UART1 can be switched in 3 groups of pins: [RxD/P3.0, TxD/P3.1];
[RxD_2/P3.6, TxD_2/P3.7];
[RxD_3/P1.6, TxD_3/P1.7].

Mnemonic	Add	Name	7	6	5	4	3	2	1	0	Reset Value
CLK_DIV (PCON2)	97H	Clock Division register	MCKO_S1	MCKO_S0	ADRJ	Tx_Rx	Tx2_Rx2	CLKS2	CLKS1	CLKS0	0000,x000

Tx_Rx：the set bit of relay and broadcast mode of UART1

0：UART1 works on normal mode

1：UART1 works on relay and broadcast mode，that to say output the input level state of RxD port to the outside TxD pin in real time, namely the external output of TxD pin can reflect the input level state of RxD port.

the RxD and TxD of UART1 can be switched in 3 groups of pins: [RxD/P3.0, TxD/P3.1];
[RxD_2/P3.6, TxD_2/P3.7];
[RxD_3/P1.6, TxD_3/P1.7].

Tx2_Rx2：the set bit of relay and broadcast mode of UART2，the function is reserved temporarily.
the RxD2 and TxD2 of UART2 can be switched in 2 groups of pins: [RxD2/P1.0, TxD2/P1.1];
[RxD2_2/P4.6, TxD2_2/P4.7].

STC MCU Limited.

4.6 External Resources that can wake up MCU from PD Mode

The external resources that can wake up MCU from Stop / Power-Down mode are INT0/P3.2, INT1/P3.3 (INT0/INT1 can interrupt on both rising and falling edge), $\overline{\text{INT3}}$/P3.7, $\overline{\text{INT4}}$/P3.0($\overline{\text{INT2}}$/$\overline{\text{INT3}}$/$\overline{\text{INT4}}$ only can interrupt on falling edge), RxD/RxD2/RxD3/RxD4 pins, T0/T1/T2/T3/T4 pins, CCP/PCA/PWM input pins — CCP0/CCP1/CCP2/CCP3/CCP4/CCP5 pins and internal power-down wake-up Timer.

4.7 SFRs related to I/O ports and Its Address Statement

Some SFRs related with I/O ports are listed below.

P5 register (bit addressable)

SFR name	Address	bit	B7	B6	B5	B4	B3	B2	B1	B0
P5	C8H	name	-	-	P5.5	P5.4	P5.3	P5.2	P5.1	P5.0

P5M1 register (non bit addressable)

SFR name	Address	bit	B7	B6	B5	B4	B3	B2	B1	B0
P5M1	C9H	name	-	-	P5M1.5	P5M1.4	P5M1.3	P5M1.2	P5M1.1	P3M1.0

P5M0 register (non bit addressable)

SFR name	Address	bit	B7	B6	B5	B4	B3	B2	B1	B0
P5M0	CAH	name	-	-	-	-	P5M0.3	P5M0.2	P5M0.1	P5M0.0

P4 register (bit addressable)

SFR name	Address	bit	B7	B6	B5	B4	B3	B2	B1	B0
P4	C0H	name	P4.7	P4.6	P4.5	P4.4	P4.3	P4.2	P4.1	P4.0

P4 register could be bit-addressable and set/cleared by CPU. And P4.7~P1.0 coulde be set/cleared by CPU. P4.5 is an alternated function on ALE pin.

P4M1 register (non bit addressable)

SFR name	Address	bit	B7	B6	B5	B4	B3	B2	B1	B0
P4M1	B3H	name	P4M1.7	P4M1.6	P4M1.5	P4M1.4	P4M1.3	P4M1.2	P4M1.1	P4M1.0

P4M0 register (non bit addressable)

SFR name	Address	bit	B7	B6	B5	B4	B3	B2	B1	B0
P4M0	B4H	name	P4M0.7	P4M0.6	P4M0.5	P4M0.4	P4M0.3	P4M0.2	P4M0.1	P4M0.0

P3 register (bit addressable)

SFR name	Address	bit	B7	B6	B5	B4	B3	B2	B1	B0
P3	B0H	name	P3.7	P3.6	P3.5	P3.4	P3.3	P3.2	P3.1	P3.0

P3 register could be bit-addressable and set/cleared by CPU. And P3.7~P3.0 coulde be set/cleared by CPU.

P3M1 register (non bit addressable)

SFR name	Address	bit	B7	B6	B5	B4	B3	B2	B1	B0
P3M1	B1H	name	P3M1.7	P3M1.6	P3M1.5	P3M1.4	P3M1.3	P3M1.2	P3M1.1	P3M1.0

P3M0 register (non bit addressable)

SFR name	Address	bit	B7	B6	B5	B4	B3	B2	B1	B0
P3M0	B2H	name	P3M0.7	P3M0.6	P3M0.5	P3M0.4	P3M0.3	P3M0.2	P3M0.1	P3M0.0

STC MCU Limited.

P2 register (bit addressable)

SFR name	Address	bit	B7	B6	B5	B4	B3	B2	B1	B0
P2	A0H	name	P2.7	P2.6	P2.5	P2.4	P2.3	P2.2	P2.1	P2.0

P2 register could be bit-addressable and set/cleared by CPU. And P2.7~P2.0 coulde be set/cleared by CPU.

P2M1 register (non bit addressable)

SFR name	Address	bit	B7	B6	B5	B4	B3	B2	B1	B0
P2M1	95H	name	P2M1.7	P2M1.6	P2M1.5	P2M1.4	P2M1.3	P2M1.2	P2M1.1	P2M1.0

P2M0 register (non bit addressable)

SFR name	Address	bit	B7	B6	B5	B4	B3	B2	B1	B0
P2M0	96H	name	P2M0.7	P2M0.6	P2M0.5	P2M0.4	P2M0.3	P2M0.2	P2M0.1	P2M0.0

P1 register (bit addressable)

SFR name	Address	bit	B7	B6	B5	B4	B3	B2	B1	B0
P1	90H	name	P1.7	P1.6	P1.5	P1.4	P1.3	P1.2	P1.1	P1.0

P1 register could be bit-addressable and set/cleared by CPU. And P1.7~P1.0 coulde be set/cleared by CPU.

P1M1 register (non bit addressable)

SFR name	Address	bit	B7	B6	B5	B4	B3	B2	B1	B0
P1M1	91H	name	P1M1.7	P1M1.6	P1M1.5	P1M1.4	P1M1.3	P1M1.2	P1M1.1	P1M1.0

P1M0 register (non bit addressable)

SFR name	Address	bit	B7	B6	B5	B4	B3	B2	B1	B0
P1M0	92H	name	P1M0.7	P1M0.6	P1M0.5	P1M0.4	P1M0.3	P1M0.2	P1M0.1	P1M0.0

P0 register (bit addressable)

SFR name	Address	bit	B7	B6	B5	B4	B3	B2	B1	B0
P0	80H	name	P0.7	P0.6	P0.5	P0.4	P0.3	P0.2	P0.1	P0.0

P0 register could be bit-addressable. And P0.7~P0.0 coulde be set/cleared by CPU.

P0M1 register (non bit addressable)

SFR name	Address	bit	B7	B6	B5	B4	B3	B2	B1	B0
P0M1	93H	name	P0M1.7	P0M1.6	P0M1.5	P0M1.4	P0M1.3	P0M1.2	P0M1.1	P0M1.0

P0M0 register (non bit addressable)

SFR name	Address	bit	B7	B6	B5	B4	B3	B2	B1	B0
P0M0	94H	name	P0M0.7	P0M0.6	P0M0.5	P0M0.4	P0M0.3	P0M0.2	P0M0.1	P0M0.0

STC MCU Limited.

Assembly：

```
P5      EQU   0C8H        ; or  P5      DATA   0C8H
P5M1    EQU   0C9H        ; or  P5M1    DATA   0C9H
P5M0    EQU   0CAH
;P5 address statement is shown above
P4      EQU   0C0H        ; or  P4      DATA   0C0H
P4M1    EQU   0B3H        ; or  P4M1    DATA   0B3H
P4M0    EQU   0B4H
;P4 address statement is shown above
P3M1    EQU   0B1H        ; or  P3M1    DATA   0B1H
P3M0    EQU   0B2H
;P3 address statement is shown above
P2M1    EQU   095H
P2M0    EQU   096H
;P2 address statement is shown above
P1M1    EQU   091H
P1M0    EQU   092H
;P1 address statement is shown above
P0M1    EQU   093H
P0M0    EQU   094H
;P0 address statement is shown above
```

C Language:

```
sfr     P5    = 0xc8;
sfr     P5M1  = 0xc9;
sfr     P5M0  = 0xca;
/*P5 address statement is shown above*/
sfr     P4    = 0xc0;
sfr     P4M1  = 0xb3;
sfr     P4M0  = 0xb4;
/*P4 address statement is shown above*/
sfr     P3M1  = 0xb1;
sfr     P3M0  = 0xb2;
/*P3 address statement is shown above*/
sfr     P2M1  = 0x95;
sfr     P2M0  = 0x96;
/*P2 address statement is shown above*/
sfr     P1M1  = 0x91;
sfr     P1M0  = 0x92;
/*P1 address statement is shown above*/
sfr     P0M1  = 0x93;
sfr     P0M0  = 0x94;
/*P0 address statement is shown above*/
```

STC MCU Limited.

4.8 Demo Program of STC15 series P0/P1/P2/P3/P4/P5

```
/*---------------------------------------------------------------------------------------------------------------*/
/* --- STC MCU  Limited. ---------------------------------------------------------------------------------------*/
/* --- Exam Program test P0/P1/P2/P3/P4/P5 ---------------------------------------------------------------------*/
/* --- Mobile: (86)13922805190 ---------------------------------------------------------------------------------*/
/* --- Fax: 86-755-82905966 ------------------------------------------------------------------------------------*/
/* --- Tel: 86-755-82948412 ------------------------------------------------------------------------------------*/
/* --- Web: www.STCMCU.com -------------------------------------------------------------------------------------*/
/* If you want to use the program or the program referenced in the  ----------------------------------------*/
/* article, please specify in which data and procedures from STC    ----------------------------------------*/
/*---- In Keil C development environment, select the Intel 8052 to compiling ----------------------------------*/
/*----  And only contain < reg51.h > as header file ------------------------------------------------------------*/
/*---------------------------------------------------------------------------------------------------------------*/

//suppose the frequency of test chip is 18.432MHz

#include "reg51.h"
#include "intrins.h"

sfr P5      = 0xC8;          //6 bit Port5     P5.7  P5.6  P5.5  P5.4  P5.3  P5.2  P5.1  P5.0      xxxx1,1111
sfr P5M0 = 0xC9;             //                                                                    0000,0000
sfr P5M1 = 0xCA;             //                                                                    0000,0000
                             //                  7     6     5     4     3     2     1     0       Reset Value

sfr P4      = 0xC0;          //8 bitPort4      P4.7  P4.6  P4.5  P4.4  P4.3  P4.2  P4.1  P4.0      1111,1111
sfr P4M0 = 0xB4;             //                                                                    0000,0000
sfr P4M1 = 0xB3;             //                                                                    0000,0000

sbit    P10     =       P1^0;
sbit    P11     =       P1^1;
sbit    P12     =       P1^2;
sbit    P13     =       P1^3;
sbit    P14     =       P1^4;
sbit    P15     =       P1^5;
sbit    P16     =       P1^6;
sbit    P17     =       P1^7;

sbit    P30     =       P3^0;
sbit    P31     =       P3^1;
sbit    P32     =       P3^2;
sbit    P33     =       P3^3;
sbit    P34     =       P3^4;
sbit    P35     =       P3^5;
sbit    P36     =       P3^6;
sbit    P37     =       P3^7;
```

STC MCU Limited.

```
sbit    P20     =       P2^0;
sbit    P21     =       P2^1;
sbit    P22     =       P2^2;
sbit    P23     =       P2^3;
sbit    P24     =       P2^4;
sbit    P25     =       P2^5;
sbit    P26     =       P2^6;
sbit    P27     =       P2^7;

sbit    P00     =       P0^0;
sbit    P01     =       P0^1;
sbit    P02     =       P0^2;
sbit    P03     =       P0^3;
sbit    P04     =       P0^4;
sbit    P05     =       P0^5;
sbit    P06     =       P0^6;
sbit    P07     =       P0^7;

sbit    P40     =       P4^0;
sbit    P41     =       P4^1;
sbit    P42     =       P4^2;
sbit    P43     =       P4^3;
sbit    P44     =       P4^4;
sbit    P45     =       P4^5;
sbit    P46     =       P4^6;
sbit    P47     =       P4^7;

sbit    P50     =       P5^0;
sbit    P51     =       P5^1;
sbit    P52     =       P5^2;
sbit    P53     =       P5^3;
sbit    P54     =       P5^4;
sbit    P55     =       P5^5;


void delay(void);

void main(void)
{
        P10     =       0;
        delay();
        P11     =       0;
        delay();
        P12     =       0;
        delay();
        P13     =       0;
        delay();
        P14     =       0;
        delay();
```

STC MCU Limited.

```
P15     =       0;
delay();
P16     =       0;
delay();
P17     =       0;
delay();

P1      =       0xff;

P30     =       0;
delay();
P31     =       0;
delay();
P32     =       0;
delay();
P33     =       0;
delay();
P34     =       0;
delay();
P35     =       0;
delay();
P36     =       0;
delay();
P37     =       0;
delay();

P3      =       0xff;

P20     =       0;
delay();
P21     =       0;
delay();
P22     =       0;
delay();
P23     =       0;
delay();
P24     =       0;
delay();
P25     =       0;
delay();
P26     =       0;
delay();
P27     =       0;
delay();

P2      =       0xff;

P07     =       0;
delay();
```

STC MCU Limited.

```
    P06     =       0;
    delay();
    P05     =       0;
    delay();
    P04     =       0;
    delay();
    P03     =       0;
    delay();
    P02     =       0;
    delay();
    P01     =       0;
    delay();
    P00     =       0;
    delay();

    P0      =       0xff;

    P40     =       0;
    delay();
    P41     =       0;
    delay();
    P42     =       0;
    delay();
    P43     =       0;
    delay();
    P44     =       0;
    delay();
    P45     =       0;
    delay();
    P46     =       0;
    delay();
    P47     =       0;
    delay();

    P4      =       0xff;

    P50     =       0;
    delay();
    P51     =       0;
    delay();
    P52     =       0;
    delay();
    P53     =       0;
    delay();
    P54     =       0;
    delay();
    P55     =       0;
    delay();

    P5      =       0xff;
```

STC MCU Limited.

```
        while(1)
        {
                P1      =       0x00;
                delay();
                P1      =       0xff;

                P3      =       0x00;
                delay();
                P3      =       0xff;

                P2      =       0x00;
                delay();
                P2      =       0xff;

                P0      =       0x00;
                delay();
                P0      =       0xff;

                P4      =       0x00;
                delay();
                P4      =       0xff;

                P5      =       0x00;
                delay();
                P5      =       0xff;
        }
}

void delay(void)
{
        unsigned int i = 0;
        for(i=60000;i>0;i--)
        {
                _nop_();
                _nop_();
                _nop_();
                _nop_();
                _nop_();
                _nop_();
                _nop_();
                _nop_();
                _nop_();
                _nop_();
                _nop_();
                _nop_();
                _nop_();
                _nop_();
                _nop_();
                _nop_();
```

STC MCU Limited.

```
                _nop_();
                _nop_();
                _nop_();
                _nop_();

                _nop_();
                _nop_();
                _nop_();
                _nop_();
                _nop_();
                _nop_();
                _nop_();
                _nop_();
                _nop_();
                _nop_();
                _nop_();
                _nop_();
                _nop_();
                _nop_();
                _nop_();
                _nop_();
                _nop_();
                _nop_();
                _nop_();
                _nop_();
                _nop_();
        }
}
```

STC MCU Limited.

4.9 I/O ports Modes

4.9.1 Quasi-bidirectional I/O

Port pins in quasi-bidirectional output mode function similar to the traditional 8051 port pins. A quasi-bidirectional port can be used as an input and output without the need to reconfigure the port. This is possible because when the port outputs a logic high, it is weakly driven, allowing an external device to pull the pin low. When the pin outputs low, it is driven strongly and able to sink a large current. There are three pull-up transistors in the quasi-bidirectional output that serve different purposes.

One of these pull-ups, called the “very weak” pull-up, is turned on whenever the port register for the pin contains a logic “1”. This very weak pull-up sources a very small current that will pull the pin high if it is left floating.

A second pull-up, called the “weak” pull-up, is turned on when the port register for the pin contains a logic “1” and the pin itself is also at a logic “1” level. This pull-up provides the primary source current for a quasi-bidirectional pin that is outputting a 1. If this pin is pulled low by the external device, this weak pull-up turns off, and only the very weak pull-up remains on. In order to pull the pin low under these conditions, the external device has to sink enough current to over-power the weak pull-up and pull the port pin below its input threshold voltage.

The third pull-up is referred to as the “strong” pull-up. This pull-up is used to speed up low-to-high transitions on a quasi-bidirectional port pin when the port register changes from a logic “0” to a logic “1”. When this occurs, the strong pull-up turns on for two CPU clocks, quickly pulling the port pin high.

STC MCU Limited.

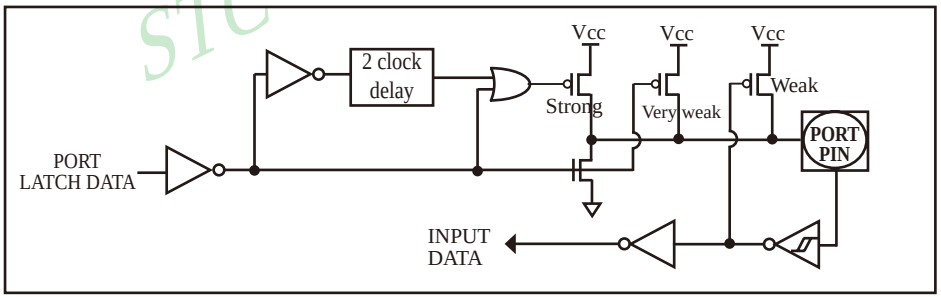

Quasi-bidirectional output

4.9.2 Push-pull Output

The push-pull output configuration has the same pull-down structure as both the open-drain and the quasi-bidirectional output modes, but provides a continuous strong pull-up when the port register conatins a logic “1”. The push-pull mode may be used when more source current is needed from a port output. In addition, input path of the port pin in this configuration is also the same as quasi-bidirectional mode.

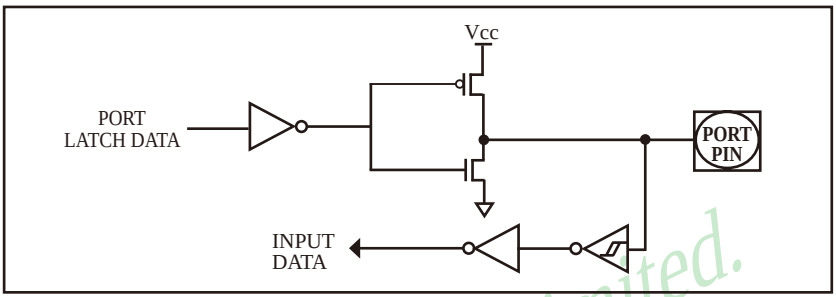

Push-pull output

STC MCU Limited.

4.9.3 Input-only (High-Impedance)Mode

The input-only configuration is a Schmitt-triggered input without any pull-up resistors on the pin.

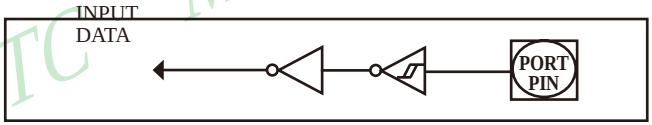

Input-only Mode

4.9.4 Open-drain Output

The open-drain output configuration turns off all pull-ups and only drives the pull-down transistor of the port pin when the port register contains a logic “0”. To use this configuration in application, a port pin must have an external pull-up, typically tied to VCC. The input path of the port pin in this configuration is the same as quasi-bidirection mode.

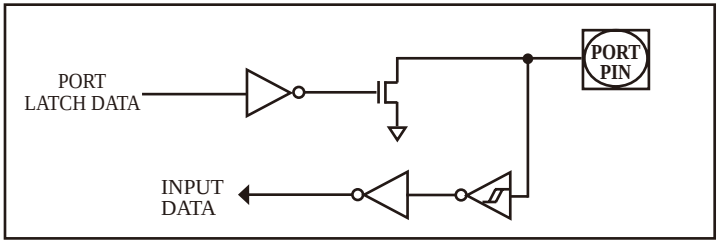

Open-drain output

4.10 I/O port application notes

Traditional 8051 access I/O (signal transition or read status) timing is 12 clocks, STC15 series MCU is 4 clocks. When you need to read an external signal, if internal output a rising edge signal, for the traditional 8051, this process is 12 clocks, you can read at once, but for STC15F2K60S2 series MCU, this process is 4 clocks, when internal instructions is complete but external signal is not ready, so you must delay 1~2 nop operation.

When MCU is connected to a SPI or I2C or other open-drain peripherals circuit, you need add a 10K pull-up resistor.

Some IO port connected to a PNP transistor, but no pul-up resistor. The correct access method is IO port pull-up resistor and transistor base resistor should be consistent, or IO port is set to a strongly push-pull output mode.

Using IO port drive LED directly or matrix key scan, needs add a 470ohm to 1Kohm resistor to limit current.

STC MCU Limited.

4.11 Typical transistor control circuit

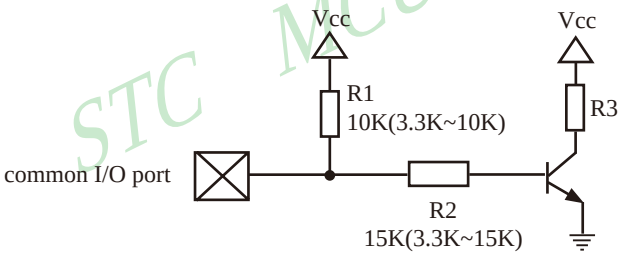

If I/O is configed as “weak” pull-up, you should add a external pull-up resistor R1(3.3K~10K ohm). If no pull-up resistor R1, proposal to add a 15K ohm series resistor R2 at least or config I/O as “push-pull” mode.

4.12 Typical diode control circuit

For weak pull-up / quasi-bidirectional I/O, use sink current drive LED, current limiting resistor as greater than 1K ohm, minimum not less than 470 ohm.

For push-pull / strong pull-up I/O, use drive current drive LED.

4.13 3V/5V hybrid system

When STC15 series 5V MCU connect to 3.3V peripherals. To prevent the 3.3V device can not afford to 5V voltage, the 5V MCU corresponding I/O should first add a 330 ohm current limiting resistor to 3.3 device I/O ports. And in intialization of procedures the 5V MCU corresponding I/O is set to open drain mode, disconnect the internal pull-up resistor, the corresponding 3.3V device I/O port add 10K ohm external pull-up resistor to the 3.3V device VCC, so high level to 3.3V and low to 0V, which can proper functioning

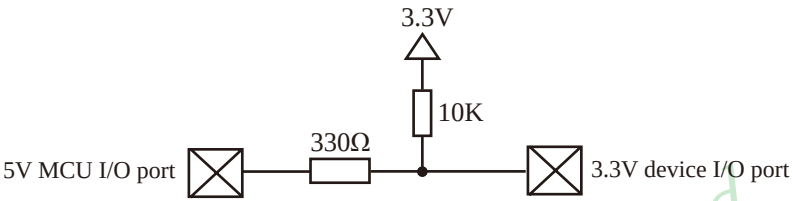

When STC15 series 3V MCU connect to 5V peripherals. To prevent the 3V MCU can not afford to 5V voltage, if the corresponding I/O port as input port, the port may be in an isolation diode in series, isolated high-voltage part. When the external signal is higher than MCU operating voltage, the diode cut-off, I/O have been pulled high by the internal pull-up resistor; when the external signal is low, the diode conduction, I/O port voltage is limited to 0.7V, it's low signal to MCU.

When STC15 series 3V MCU connect to 5V peripherals. To prevent the 3V MCU can not afford to 5V voltage, if the corresponding I/O port as output port, the port may be connect a NPN transistor to isolate high-voltage part. The circuit is shown as below.

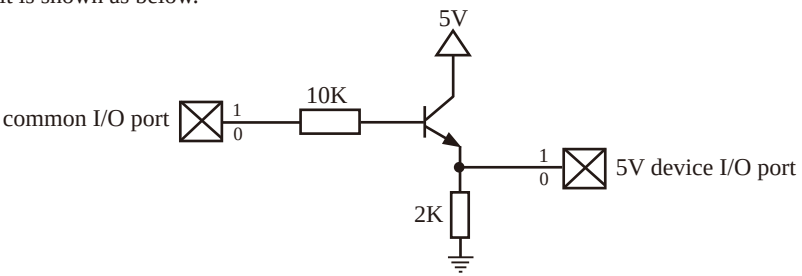

4.14 How to Make I/O Port Low after MCU Reset

Traditional 8051 MCU power-on reset, the general IO port are weak pull-high output, while many practical applications require IO port remain low level after power-on reset, otherwise the system malfunction would be generated. For STC15 series MCU, IO port can add a pull-down resistor (1K/2K/3K), so that when power-on reset, although a weak internal pull-up to make MCU output high, but because of the limited capacity of the internal pull-up, it can not pull-high the pad, so this IO port is low level after power-on reset. If the I/O port need to drive high, you can set the IO model as the push-pull output mode, while the push-pull mode the drive current can be up to 20mA, so it can drive this I/O high.

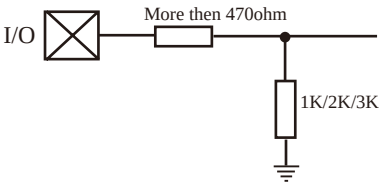

Note: Users can set whether the P2.0/RSTOUT_LOW pin output low or high after power-on reset in STC-ISP Writer/Programmer. But other pins of STC15 series all output high after power-on reset.

The output low after reset pin is on RSTOUT_LOW/P3.3 for STC15 series 8-pin MCU (such as STC15F101W series). While it is on RSTOUT_LOW/P1.0 for 16-pin MCU (such as STC15W10x series) and on RSTOUT_LOW/P2.0 for more than 16-pin MCU(such as STC15F2K60S2, STC15W4K32S4 and so on). Now take RSTOUT_LOW/P2.0 for example to introduce reset pin.

STC MCU Limited.

4.15 I/O Status while PWM Outputing

Its mode, which need to set by software, is not changed when I/O port is used as PWM output. Recommend to set the I/O port to strong push-pull output mode, that is different from early STC 1T series MCU(such as STC12 series).

When I/O is used as PWM port, it's status as bellow:

Before PWM output	While PWM outputing
Quasi-bidirectional	Push-Pull (Strong pull-high need 1K~10K limiting resistor)
Push-Pull	Push-Pull (Strong pull-high need 1K~10K limiting resistor)
Input ony (Floating)	PWM Invalid
Open-drain	Open-drain

4.16 Keyboard Scanning Circuit using I/O ports

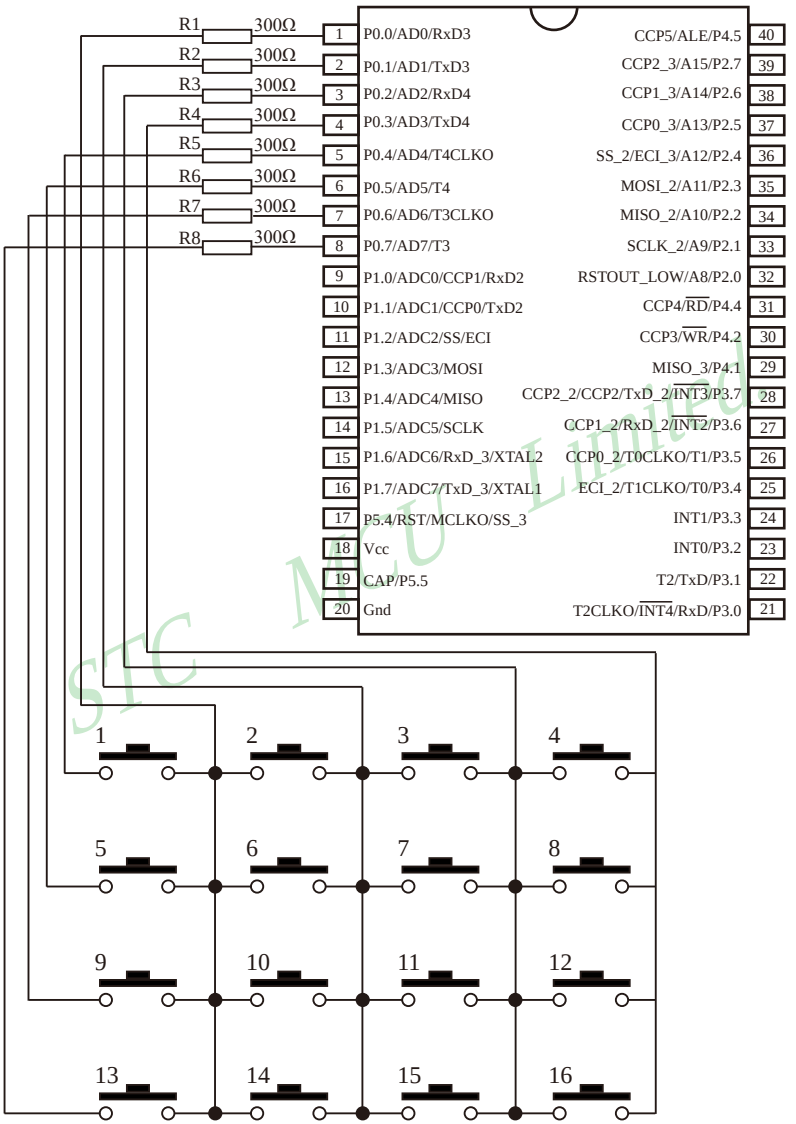

STC MCU Limited

4.17 Pin Function and Logic Turth Table of 74HC595

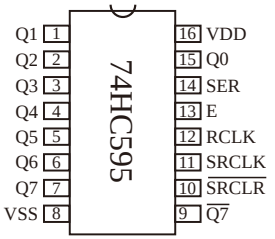

Pin Map of 74HC595

74HC595 Pin Introduction		
Pin Name	Pin Number	Pin Function
Q0 ~ Q7	15, 1~7	Noninverted, 3−state, latch outputs
$\overline{Q7}$	9	Serial data output
SRCLR	10	reset(active-low)
SRCLK	11	Shift Register Clock Input
RCLK	12	Storage Latch Clock Input
E	13	Active−low Output Enable
SER	14	Serial data input
VDD	16	Power
VSS	8	Gnd

The 74HC595 consists of an 8−bit shift register and an 8−bit D−type latch with three−state parallel outputs. The shift register accepts serial data and provides a serial output. The shift register also provides parallel data to the 8 −bit latch. The shift register and latch have independent clock inputs. This device also has an asynchronous reset for the shift register.

The HC595 directly interfaces with the SPI serial data port on CMOS MPUs and MCUs.

Serial data input pin SER, the data on this pin is shifted into the 8−bit serial shift register. Shift register clock input pin SRCLK, a low− to−high transition on this input causes the data at the Serial Input pin to be shifted into the 8−bit shift register. Reset pin SRCLR, active−low, asynchronous, Shift Register Reset Input. A low on this pin resets the shift register portion of this device only. The 8−bit latch is not affected. Storage Latch Clock Input pin RCLK, a low−to−high transition on this input latches the shift register data. Active−low Output Enable pin E, a low on this input allows the data from the latches to be presented at the outputs. A high on this input forces the outputs (Q0~Q7) into the high−impedance state. The serial output is not affected by this control unit. Noninverted, Serial Data Output pin $\overline{Q7}$, this is the output of the eighth stage of the 8−bit shift register. This output does not have three−state capability.

74HC595 Turth Table					
Inputs					Outputs
SER	SRCLK	SRCLR	RCLK	E	
X	X	X	X	H	Q0~Q7 force outputs into high impedance state
X	X	X	X	L	Enable parallel outputs Q0~Q7
X	X	L	X	X	Reset shift register
L	↑	H	X	X	Shift data "L" into shift register
H	↑	H	X	X	Shift data "H" into shift register
X	↓	H	X	X	Shift register remains unchanged
X	X	X	↑	X	Transfer shift register contents to latch register
X	X	X	↓	X	Latch register remains unchanged

STC MCU Limited

4.18 Circuit Expanding I/O ports using 74HC595

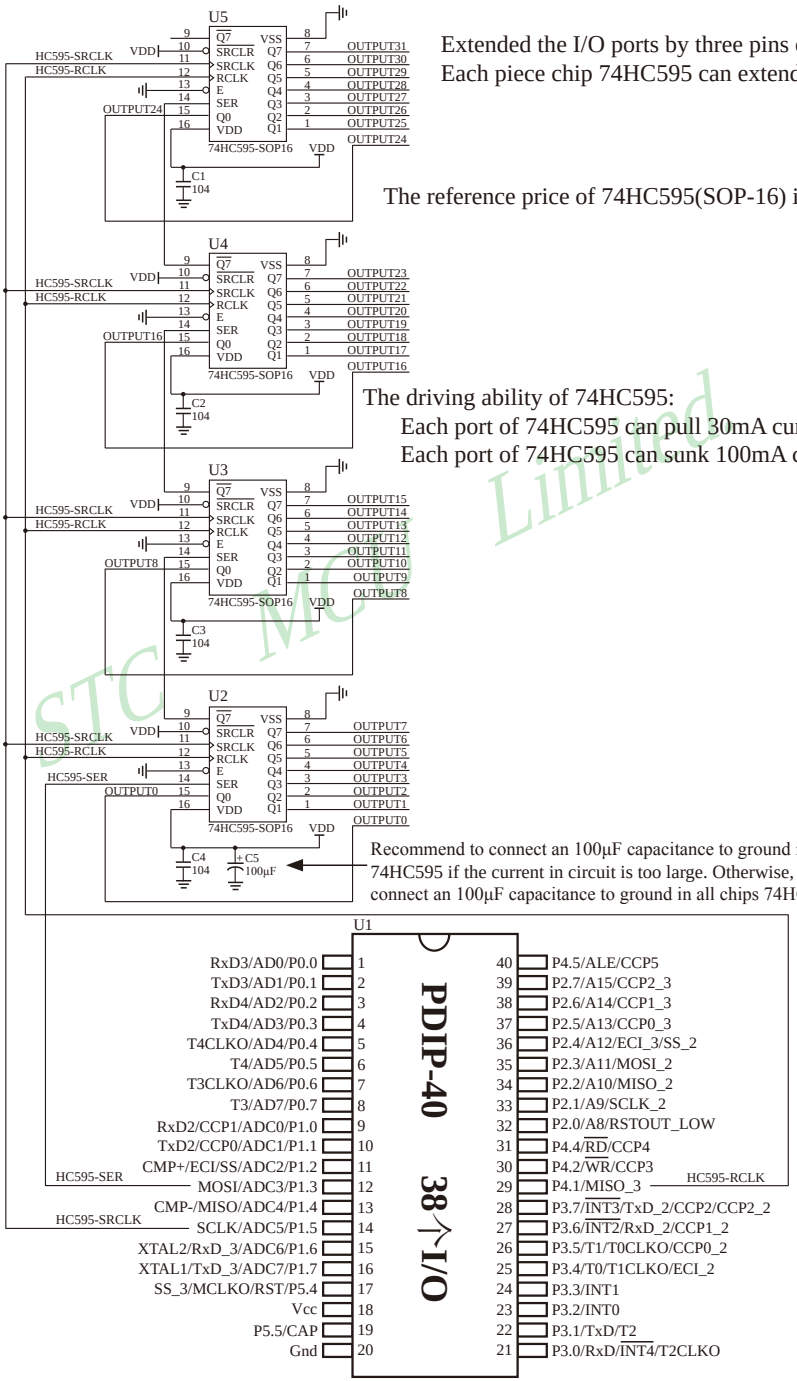

Extended the I/O ports by three pins of MCU.
Each piece chip 74HC595 can extend eight I/O ports.

The reference price of 74HC595(SOP-16) is RMB 0.2 yuan.

The driving ability of 74HC595:
Each port of 74HC595 can pull 30mA current externally;
Each port of 74HC595 can sunk 100mA current internally.

Recommend to connect an 100μF capacitance to ground in each piece chip 74HC595 if the current in circuit is too large. Otherwise, it is enough to only connect an 100μF capacitance to ground in all chips 74HC595.

STC MCU Limited

4.19 Circuit Driving 8-segment Digitron using 74HC595

Use two piece chips 74HC595 to drive 8-segment digitron

It would be better to select common cahtode digitron. (both Common cathode and Common anode)

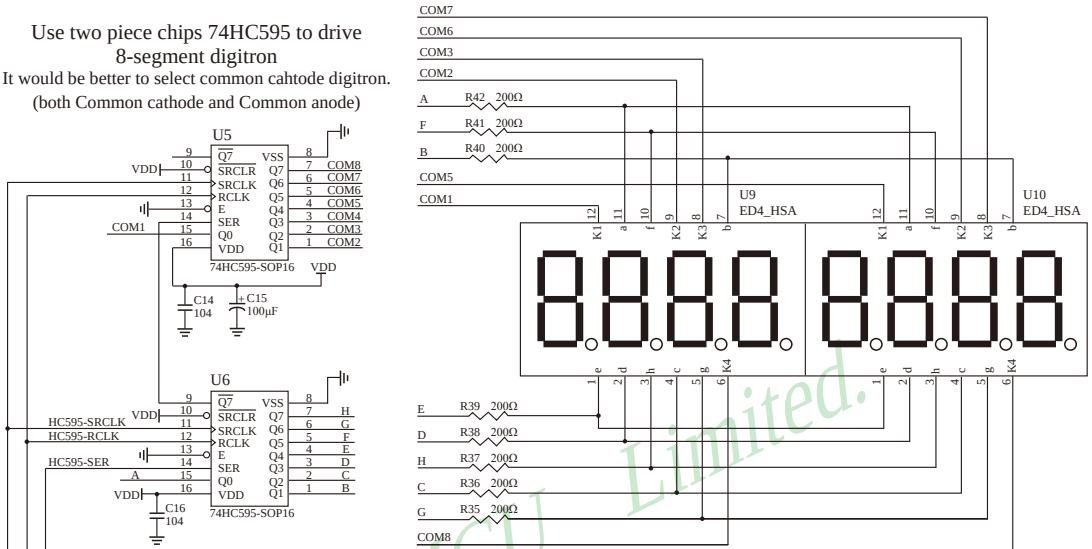

The reference price of 74HC595(SOP-16) is RMB 0.2 yuan.

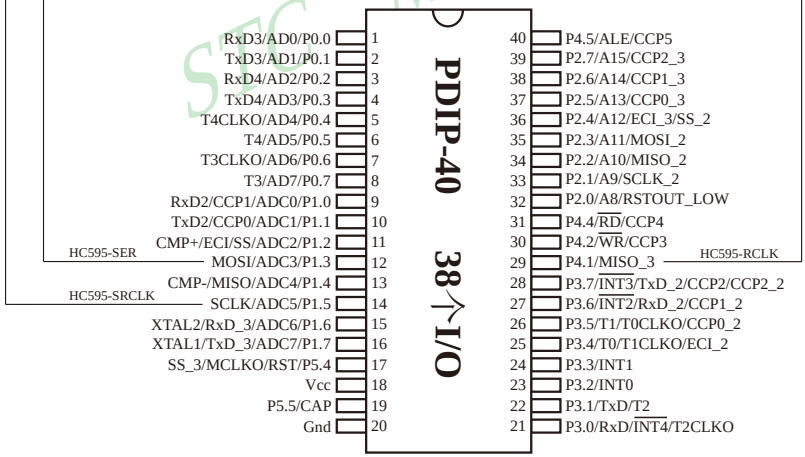

STC MCU Limited.

4.20 Demo Program of Driving 8-Segment Digitron —— Using common I/O ports to Control 74HC595

1. C Program Listing

```
/*---------------------------------------------------------------------------------------------------*/
/* --- STC MCU  Limited. ---------------------------------------------------------------------------*/
/* --- Exam Program that driving 8-segment digitron ------------------------------------------------*/
/* --- Mobile: (86)13922805190 ---------------------------------------------------------------------*/
/* --- Fax: 86-755-82905966 ------------------------------------------------------------------------*/
/* --- Tel: 86-755-82948412 ------------------------------------------------------------------------*/
/* --- Web: www.STCMCU.com -------------------------------------------------------------------------*/
/* If you want to use the program or the program referenced in the  ----------------------------*/
/* article, please specify in which data and procedures from STC    ----------------------------*/
/*---- In Keil C development environment, select the Intel 8052 to compiling ---------------------*/
/*----  And only contain < reg51.h > as header file ----------------------------------------------*/
/*---------------------------------------------------------------------------------------------------*/

/*************     the description of functions     ***************

drive 8-bit digitron using common I/O ports to conrol 74HC595

users can choose the clock frequency by revised macros.

users can choose whether the digitron is common cathode or anode in display function.
recommend to choose common cathode

Display effect: cycle display 0,1,2...,A,B..F, black-out in 8 digital tube.

*****************************************/

#include  "reg52.h"

/****************************** define macros ************************************/

#define    MAIN_Fosc        11059200UL                //define master clock
//#define  MAIN_Fosc        22118400UL                //define clock

/*****************************************************************************/

/******************** generate macro automatically, can not be changed *****************/

#define    Timer0_Reload      (MAIN_Fosc / 12000)

/*****************************************************************************/
```

STC MCU Limited.

```
/**************    declare local constant    ***************/
unsigned char code t_display[]={
//          0   1   2   3   4   5   6   7   8   9   A   B   C   D   E   F  black-out
        0x3F,0x06,0x5B,0x4F,0x66,0x6D,0x7D,0x07,0x7F,0x6F,0x77,0x7C,0x39,0x5E,0x79,0x71,0x00};
                                                                                    //block code

unsigned char code T_COM[]={0x01,0x02,0x04,0x08,0x10,0x20,0x40,0x80};               //bit code

/**************    declare local variable    ***************/
//sbit      P_HC595_SER     =       P3^2;           //pin 14    SER     data input
//sbit      P_HC595_RCLK    =       P3^4;           //pin 12    RCLk    store (latch) clock
//sbit      P_HC595_SRCLK   =       P3^3;           //pin 11    SRCLK   Shift data clock

sbit        P_HC595_SER     =       P1^3;           //pin 14    SER     data input
sbit        P_HC595_RCLK    =       P4^1;           //pin 12    RCLk    store (latch) clock
sbit        P_HC595_SRCLK   =       P1^5;           //pin 11    SRCLK   Shift data clock

unsigned char       LED8[8];                        //display buffer
unsigned char       display_index;                  //display bit index
bit         B_1ms;                                  //1ms flag

/*********************************************/
void main(void)
{
        unsigned char       i,  k;
        unsigned int        j;

        TMOD    =       0x01;                               //Timer 0 config as 16bit timer, 12T
        TH0     =       (65536 - Timer0_Reload) / 256;
        TL0     =       (65536 - Timer0_Reload) % 256;
        ET0     =       1;
        TR0     =       1;
        EA      =       1;

        for(i=0; i<8; i++)  LED8[i] = 0x10;
        j = 0;
        k = 0;
//      for(i=0; i<8; i++)  LED8[i] = i;

        while(1)
        {
                while(!B_1ms);                          //wait for 1ms
                B_1ms = 0;
```

STC MCU Limited

```
                if(++j >= 500)                                  //500ms
                {
                        j = 0;
                        for(i=0; i<8; i++)   LED8[i] = k;       //
                        if(++k > 0x10)       k = 0;
                                             //cycle display 0,1,2...,A,B..F, black-out in 8 digital tube
                }
        }
}
/*********************************************/

/*********************************************/
void Send_595(unsigned char dat)                //send one byte
{
        unsigned char       i;
        for(i=0; i<8; i++)
        {
                if(dat & 0x80)      P_HC595_SER = 1;
                else                P_HC595_SER = 0;
                P_HC595_SRCLK = 1;
                P_HC595_SRCLK = 0;
                dat = dat << 1;
        }
}

/*********************************************/
void DisplayScan(void)                                          //display scan function
{
//      Send_595(~T_COM[display_index]);                        //common cathode   output bit code
//      Send_595(t_display[LED8[display_index]]);               //common cathode   output block code
        Send_595(T_COM[display_index]);                         //common anode     output bit code
        Send_595(~t_display[LED8[display_index]]);              //common anode     output block code
        P_HC595_RCLK = 1;
        P_HC595_RCLK = 0;                                       //latch output data
        if(++display_index >= 8)    display_index = 0;          //8 bits  return 0
}


/*********************************************/
void timer0 (void) interrupt 1                                  //Timer0 1ms interrupt function
{
        TH0  = (65536 - Timer0_Reload) / 256;                   //reload timing value
        TL0  = (65536 - Timer0_Reload) % 256;

        DisplayScan();                                          //1ms scanning display
        B_1ms = 1;                                              //1ms flag
}
```

STC MCU Limited.

2. Assembler Listing

```
/*---------------------------------------------------------------------------------------------------*/
/* --- STC MCU  Limited. ---------------------------------------------------------------------------*/
/* --- Exam Program that driving 8-segment digitron ------------------------------------------------*/
/* --- Mobile: (86)13922805190 ---------------------------------------------------------------------*/
/* --- Fax: 86-755-82905966 ------------------------------------------------------------------------*/
/* --- Tel: 86-755-82948412 ------------------------------------------------------------------------*/
/* --- Web: www.STCMCU.com -------------------------------------------------------------------------*/
/* If you want to use the program or the program referenced in the  ----------------------------*/
/* article, please specify in which data and procedures from STC    ----------------------------*/
/*---- In Keil C development environment, select the Intel 8052 to compiling ------------------*/
/*----  And only contain < reg51.h > as header file ---------------------------------------------*/
/*---------------------------------------------------------------------------------------------------*/

;/*************    the description of functions    **************

;drive 8-bit digitron using common I/O ports to conrol 74HC595

;users can choose the clock frequency by revised macros.

;users can choose whether the digitron is common cathode or anode in display function.
;recommend to choose common cathode

;Display effect: cycle display 0,1,2...,A,B..F, black-out in 8 digital tube.

;*******************************************/

;declare the reload value of Timer0 1ms
D_Timer0_Reload         EQU     (0-921)             ;1ms for 11.0592MHZ
//D_Timer0_Reload       EQU     (0-1832)            ;1ms for 22.1184MHZ

;/*************    declare local variable      **************/
;P_HC595_SER   BIT       P3.2                      ;pin 14   SER     data input
;P_HC595_RCLK  BIT       P3.4                      ;pin 12   RCLk    store (latch) clock
;P_HC595_SRCLK BIT       P3.3                      ;pin 11   SRCLK   Shift data clock

P_HC595_SER   BIT       P1.3                      ;pin 14   SER     data input
P_HC595_RCLK  BIT       P4.1                      ;pin 12   RCLk    store (latch) clock
P_HC595_SRCLK BIT       P1.5                      ;pin 11   SRCLK   Shift data clock

LED8            EQU     030H
display_index   DATA    038H
FLAG0           DATA    20H
B_1ms           BIT     FLAG0.0

;*******************************************************************
;*******************************************************************
```

STC MCU Limited.

```
        ORG     00H                             ;reset
        LJMP    F_MAIN_FUNC

        ORG     03H                             ;INT0 interrupt
;       LJMP    F_INT0_interrupt
        RETI

        ORG     0BH                             ;Timer0 interrupt
        LJMP    F_Timer0_interrupt
        RETI

        ORG     13H                             ;INT1 interrupt
;       LJMP    F_INT1_interrupt

        ORG     1BH                             ;Timer1 interrupt
;       LJMP    F_Timer1_interrupt
        RETI

;**********************************************************************
;**********************************************************************

;/*********************************************/
F_MAIN_FUNC:
        MOV     SP,     #50H

        MOV     TMOD,   #01H                    ;Timer 0 config as 16bit timer, 12T
        MOV     TH0,    #HIGH D_Timer0_Reload   ;1ms
        MOV     TL0,    #LOW  D_Timer0_Reload
        SETB    ET0                             ;
        SETB    TR0                             ;
        SETB    EA                              ;

        MOV     R0,     #LED8
L_InitLoop1:
        MOV     @R0,    #10H
        INC     R0
        MOV     A,R0
        CJNE    A,      #(LED8+8),      L_InitLoop1

        MOV     R2,     #HIGH   500             ;500ms
        MOV     R3,     #LOW    500
        MOV     R4,     #0
L_MainLoop:
        JNB     B_1ms,  $                       ;//wait for 1ms
        CLR     B_1ms

        MOV     A,      R3
        CLR     C
        SUBB    A,      #1
```

STC MCU Limited.

```
        MOV     R3,     A
        MOV     A,      R2
        SUBB    A,      #0
        MOV     R2,     A
        ORL     A,      R3
        JNZ     L_MainLoop

        MOV     R2,     #HIGH   500                     ;500ms
        MOV     R3,     #LOW    500

        MOV     R0,     #LED8
L_OptionLoop1:
        MOV     A,      R4
        MOV     @R0,    A                               ;
        INC     R0
        MOV     A,      R0
        CJNE    A,      #(LED8+8),      L_OptionLoop1
        INC     R4      ;
        MOV     A,      R4
        CJNE    A,      #11H,   L_MainLoop
                                        ;cycle display 0,1,2...,A,B..F, black-out in 8 digital tube.
        MOV     R4,     #0
        SJMP    L_MainLoop

;/*********************************************/

t_display:
; 0   1   2   3   4   5   6   7   8   9   A   B   C   D   E   F  black-out
DB 03FH,006H,05BH,04FH,066H,06DH,07DH,007H,07FH,06FH,077H,07CH,039H,05EH,079H,071H,000H
;block code

T_COM:
        DB      01H,02H,04H,08H,10H,20H,40H,80H         ;bit code

;/*********************************************/
F_Send_595:                                             ;send one byte
        MOV     R0,     #8
L_Send595_Loop:
        RLC     A
        MOV     P_HC595_SER,C
        SETB    P_HC595_SRCLK
        CLR     P_HC595_SRCLK
        DJNZ    R0,     L_Send595_Loop
        RET

;/*********************************************/
F_DisplayScan:                                          ;display scan function
        MOV     DPTR,   #T_COM
        MOV     A,      display_index
```

STC MCU Limited.

```
        MOVC    A,      @A+DPTR
;       CPL             A                       ;common cathode
                                                ;comment this instruction if common anode
        LCALL   F_Send_595                      ;output bit code

        MOV     DPTR,   #t_display
        MOV     A,      #LED8
        ADD     A,      display_index
        MOV     R0,     A
        MOV     A,      @R0
        MOVC    A,      @A+DPTR
        CPL     A                               ;common anode
                                                ;comment this instruction if common anode
        LCALL   F_Send_595                      ;output block code
        SETB    P_HC595_RCLK
        CLR     P_HC595_RCLK                    ;latch output data
        INC     display_index
        MOV     A,      display_index
        CJNE    A,      #8,L_QuitDisplayScan
        MOV     display_index,  #0              ;8 bits  return 0
L_QuitDisplayScan:
        RET

;*********************************************************************
;*********************************************************************
F_Timer0_interrupt:                             ;Timer0 1ms interrupt function
        PUSH    PSW                             ;scene protection
        PUSH    ACC
        MOV     A,      R0
        PUSH    ACC
        PUSH    DPH
        PUSH    DPL

        MOV     TH0,    #HIGH D_Timer0_Reload   ;1ms     reload timing value
        MOV     TL0,    #LOW  D_Timer0_Reload

        LCALL   F_DisplayScan                   ;1ms scanning display
        SETB    B_1ms                           ;1ms flag

L_QuitT0Interrupt:
        POP     DPL                             ;spot recovery
        POP     DPH
        POP     ACC
        MOV     R0,A
        POP     ACC
        POP     PSW
        RETI

        END
```

STC MCU Limited.

4.21 Application Circuit using I/O ports to Drive LED

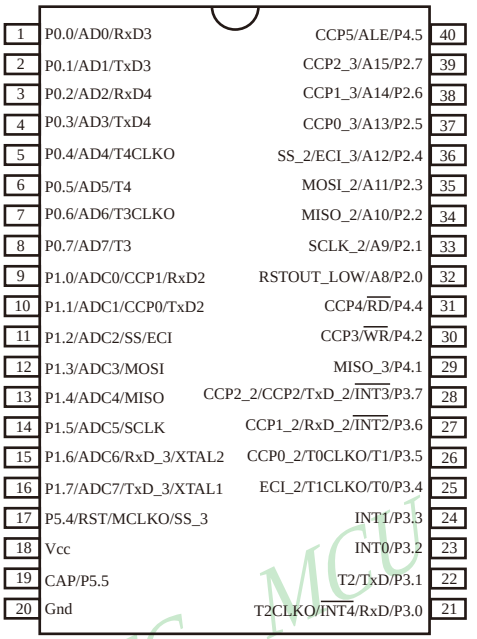

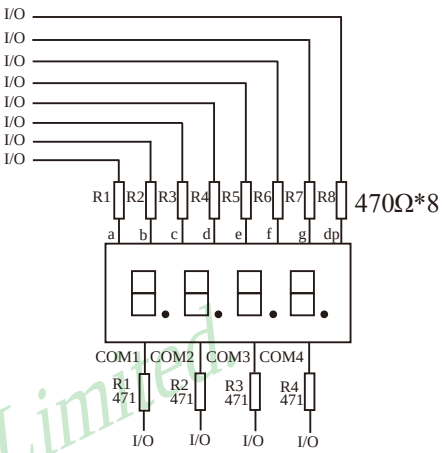

I/O dynamic scan driver 4 groups of digital tube Cathode circuit

STC MCU Limited

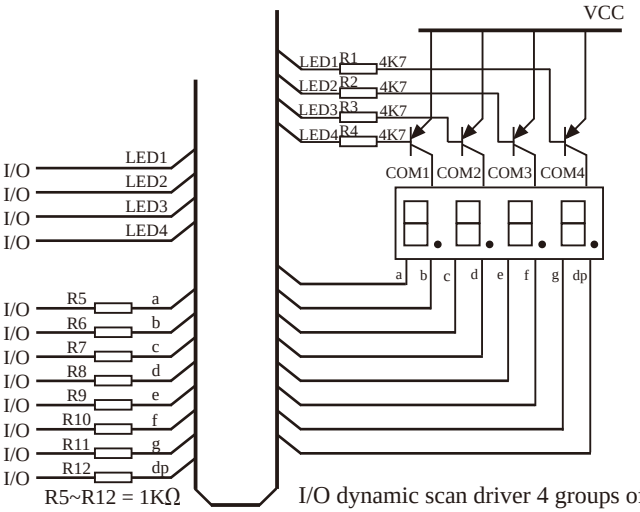

I/O dynamic scan driver 4 groups of digital tube Cathode circuit

4.22 Application Circuit using I/O to derectly Drive LCD

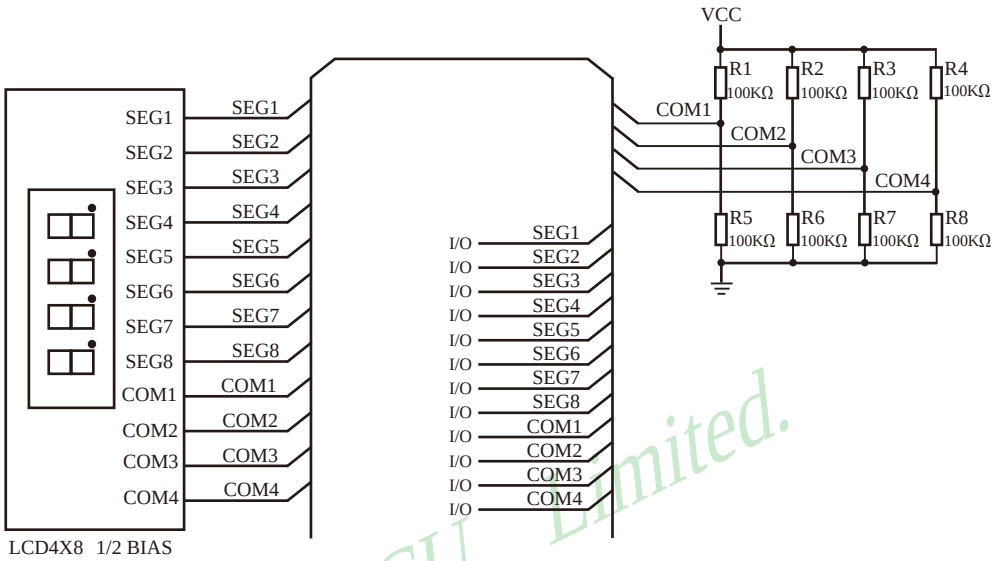

How to light on the LCD pixels:

When the pixels corresponding COM-side and SEG-side voltage difference is greater than 1/2VCC, this pixel is lit, otherwise off

Contrl SEG-side (Segment) :

I/O direct drive Segment lines, control Segment output high-level (VCC) or low-level (0V).

Contrl COM-side (Common) :

I/O port and two 100K dividing resistors jointly controlled Common line, when the IO output "0", the Common-line is low level (0V), when the IO push-pull output "1", the Common line is high level (VCC), when IO as high-impedance input, the Common line is 1/2VCC.

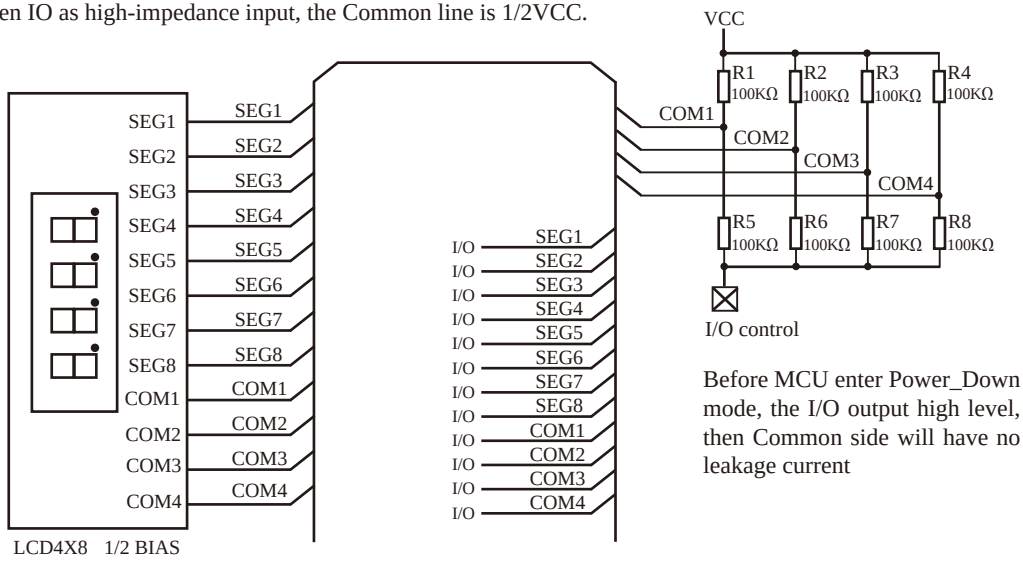

Before MCU enter Power_Down mode, the I/O output high level, then Common side will have no leakage current

STC MCU Limited.

4.23 Application Circuit using A/D Conversion to Scan Key

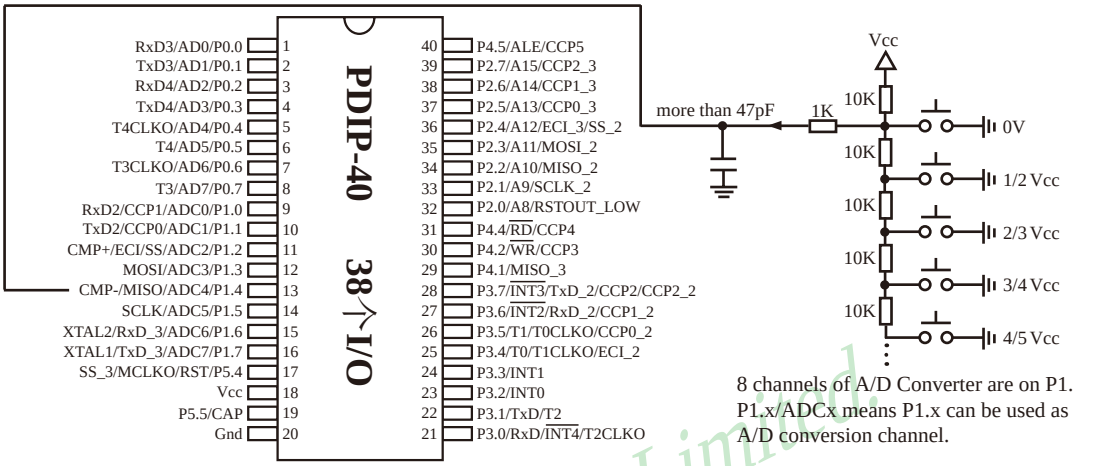

A/D Converter on P1 ports, P1.0 - P1.7

8 channels of A/D Converter are on P1. P1.x/ADCx means P1.x can be used as A/D conversion channel.

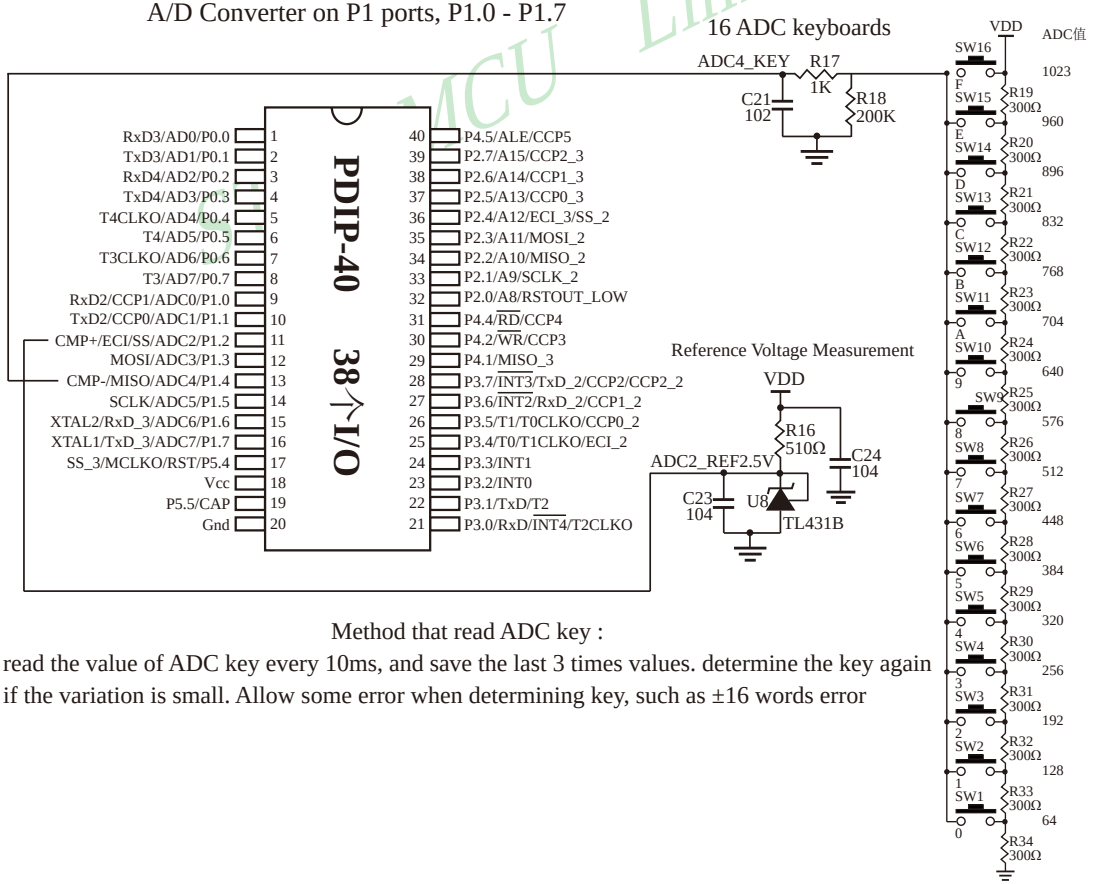

Method that read ADC key :

read the value of ADC key every 10ms, and save the last 3 times values. determine the key again if the variation is small. Allow some error when determining key, such as ±16 words error

STC MCU Limited.

4.24 Demo Program using I/O ports to Simulate I²C Interface

4.24.1 Master Mode using I/O ports to Simulate I²C Interface by Software

```
;/*-------------------------------------------------------------------------------*/
;/* --- STC MCU Limited. ---------- ----------------------------------*/
;/* --- STC 1T Series MCU Simulate I2C Master Demo ----------*/
;/* --- Mobile: (86)13922829991 ----------------------------------------*/
;/* --- Fax: 86-755-82944243 -------------------------------------------*/
;/* --- Tel: 86-755-82948412 -------------------------------------------*/
;/* --- Web: www.STCMCU.com --------------------------------------*/
;/* If you want to use the program or the program referenced in the  */
;/* article, please specify in which data and procedures from STC    */
;/*-------------------------------------------------------------------------------*/

SCL     BIT     P1.0
SDA     BIT     P1.1

;----------------------------

        ORG     0000H

        MOV     TMOD,   #20H            ;Initialize the serial port for (9600,n,8,1)
        MOV     SCON,   #5AH
        MOV     A,      #-5             ;-18432000/12/32/9600
        MOV     TH1,    A
        MOV     TL1,    A
        SETB    TR1
MAIN:
        CALL    UART_RXDATA             ;receive next serial data
        MOV     R0,     A               ;save data to R0 temporarily
                                        ;read the data of I2C device IDATA 80H
        CALL    I2C_START               ;start to read
        MOV     A,      #01H
        CALL    I2C_TXBYTE              ;send address data and reading signal
        CALL    I2C_RXACK               ;receive ACK
        CALL    I2C_RXBYTE              ;receive data
        SETB    C
        CALL    I2C_TXACK               ;send NAK
        CALL    I2C_STOP                ;finish reading

        CALL    UART_TXDATA             ;send the data that have been read to UART
                                        ;push the data of R0 to I2C device IDATA 80H
        CALL    I2C_START               ;start to write
        MOV     A,      #00H
        CALL    I2C_TXBYTE              ;send address data and writing signal
        CALL    I2C_RXACK               ;receive ACK
        MOV     A,      R0
```

STC MCU Limited.

```
        CALL    I2C_TXBYTE              ;write data
        CALL    I2C_RXACK               ;receive ACK
        CALL    I2C_STOP                ;finish writing

        JMP     MAIN

;----------------------------
;wait for serial data
;----------------------------
UART_RXDATA:
        JNB     RI,     $               ;wait to finish receiving
        CLR     RI                      ;clear RI
        MOV     A,      SBUF            ;save data
        RET

;----------------------------
;send serial data
;----------------------------
UART_TXDATA:
        JNB     TI,     $               ;wait to finish sending last a data
        CLR     TI                      ;clear TI
        MOV     SBUF,   A               ;send data
        RET

;----------------------------
;send the first signal of I2C
;----------------------------
I2C_START:
        CLR     SDA
        CALL    I2C_DELAY               ;delay
        CLR     SCL                     ;clock->low
        CALL    I2C_DELAY               ;delay
        RET

;----------------------------
;send the stop signal of I2C
;----------------------------
I2C_STOP:
        CLR     SDA
        SETB    SCL                     ;clock->high
        CALL    I2C_DELAY               ;delay
        SETB    SDA
        CALL    I2C_DELAY               ;delay
        RET

;----------------------------
;send ACK/NAK signal
;----------------------------
```

STC MCU Limited.

```
I2C_TXACK:
        MOV     SDA,    C               ;deliver ACK data
        SETB    SCL                     ;clock->high
        CALL    I2C_DELAY               ;delay
        CLR     SCL                     ;clock->low
        CALL    I2C_DELAY               ;delay
        SETB    SDA                     ;finish sending
        RET

;------------------------------
;receive ACK/NAK signal
;------------------------------
I2C_RXACK:
        SETB    SDA                     ;ready to read data
        SETB    SCL                     ;clock->high
        CALL    I2C_DELAY               ;delay
        MOV     C,      SDA             ;read ACK signal
        CLR     SCL                     ;clock->low
        CALL    I2C_DELAY               ;delay
        RET

;------------------------------
;receive next byte of data
;------------------------------
I2C_TXBYTE:
        MOV     R7,     #8
TXNEXT:
        RLC     A                       ;shift out data bit
        MOV     SDA,    C
        SETB    SCL                     ;clock->high
        CALL    I2C_DELAY               ;delay
        CLR     SCL                     ;clock->low
        CALL    I2C_DELAY               ;delay
        DJNZ    R7,     TXNEXT          ;deliver next bit
        RET

;------------------------------
;send a byte of data
;------------------------------
I2C_RXBYTE:
        MOV     R7,     #8
RXNEXT:
        SETB    SCL                     ;clock->high
        CALL    I2C_DELAY               ;delay
        MOV     C,      SDA
        RLC     A
        CLR     SCL                     ;clock->low
        CALL    I2C_DELAY               ;delay
```

STC MCU Limited.

```
        DJNZ    R7,     RXNEXT          ;receive next byte of data
        RET

;-----------------------------

I2C_DELAY:                              ;6
        PUSH    0                       ;4
        MOV     R0,     #1              ;2 6(200K) 1(400K)  [18'432'000/400'000=46]
        DJNZ    R0,     $               ;4
        POP     0                       ;3
        RET                             ;4

;-----------------------------

        END
```

STC MCU Limited.

4.24.2 Slave Mode using I/O ports to Simulate I²C Interface by Software

```
;/*-------------------------------------------------------------------------*/
;/* --- STC MCU Limited. ---------- ----------------------------------*/
;/* --- STC 1T Series MCU Simulate I2C Slave Demo ----------------*/
;/* --- Mobile: (86)13922805190 ---------------------------------------*/
;/* --- Fax: 86-755-82944243 ------------------------------------------*/
;/* --- Tel: 86-755-82948412 ------------------------------------------*/
;/* --- Web: www.STCMCU.com -------------------------------------*/
;/* If you want to use the program or the program referenced in the  */
;/* article, please specify in which data and procedures from STC    */
;/*-------------------------------------------------------------------------*/

SCL     BIT     P1.0
SDA     BIT     P1.1

;----------------------------

        ORG     0

RESET:
        SETB    SCL
        SETB    SDA

        CALL    I2C_WAITSTART               ;wait for first data
        CALL    I2C_RXBYTE                  ;receive address data
        CLR     C
        CALL    I2C_TXACK                   ;respond to ACK
        SETB    C                           ;read/write IDATA[80H - FFH]
        RRC     A                           ;read/write bit ->C
        MOV     R0,     A                   ;push address to R0
        JC      READDATA                    ;C=1(read) C=0(write)
WRITEDATA:
        CALL    I2C_RXBYTE                  ;receive data
        MOV     @R0,    A                   ;write in IDATA
        INC     R0                          ;address+1
        CLR     C
        CALL    I2C_TXACK                   ;respond to ACK
        CALL    I2C_WAITSTOP                ;wait for stop signal
        JMP     RESET

READDATA:
        MOV     A,      @R0
        INC     R0
        CALL    I2C_TXBYTE                  ;send IDATA data
        CALL    I2C_RXACK                   ;receive ACK
        CALL    I2C_WAITSTOP                ;wait for stop signal
        JMP     RESET
```

STC MCU Limited.

```
;-----------------------------
;wait for first signal
;-----------------------------
I2C_WAITSTART:
        JNB     SCL,    $               ;wait fo clock->high
        JB      SDA,    $
        JB      SCL,    $               ;wait for clock ->low
        RET

;-----------------------------
;wait for end signal
;-----------------------------
I2C_WAITSTOP:
        JNB     SCL,    $               ;wait for clock ->high
        JNB     SDA,    $
        RET

;-----------------------------
;send ACK/NAK signal
;-----------------------------
I2C_TXACK:
        MOV     SDA,    C               ;send ACK data
        JNB     SCL,    $               ;wait for clock ->high
        JB      SCL,    $               ;wait for clock ->low
        SETB    SDA                     ;finish sending
        RET

;-----------------------------
;receive ACK/NAK signal
;-----------------------------
I2C_RXACK:
        SETB    SDA
        JNB     SCL,    $               ;wait for clock ->high
        MOV     C,      SDA             ;read ACK signal
        JB      SCL,    $               ;wait for clock ->low
        RET

;-----------------------------
;receive a byte of data
;-----------------------------
I2C_RXBYTE:
        MOV     R7,     #8
RXNEXT:
        JNB     SCL,    $               ;wait for clock ->high
        MOV     C,      SDA             ;read data port
        RLC     A                       ;save data
        JB      SCL,    $               ;wait for clock ->low
        DJNZ    R7,     RXNEXT          ;receive next byte of data
        RET
```

STC MCU Limited.

```
;------------------------------
;send a byte of data
;------------------------------
I2C_TXBYTE:
        MOV     R7,     #8
TXNEXT:
        RLC     A                       ;shift out data bit
        MOV     SDA,    C
        JNB     SCL,    $               ;wait for clock ->high
        JB      SCL,    $               ;wait for clock ->low
        DJNZ    R7,     TXNEXT          ;deliver next byte of data
        RET

;------------------------------

        END
```

STC MCU Limited.

Chapter 5. Instruction System

5.1 Addressing Modes

Addressing modes are an integral part of each computer's instruction set. They allow specifyng the source or destination of data in different ways, depending on the programming situation. There are five modes available:

- Immediate addressing
- Direct addressing
- Indirect addressing
- Register addressing
- Inherent addressing
- Indexed addressing
- Bit addressing

5.1.1 Immediate Addressing

This does not access any memory locations, but uses the constant number given after the instruction as the data value. The value of a constant can follow the opcode in the program memory. This operand is preceded by a # (hash) to indicate immediate mode. For example,

```
MOV   A,  #70H
```

loads the Accumulator with the hex digits 70. The same number could be specified in decimal number as 112.

STC MCU Limited.

5.1.2 Direct Addressing

In direct addressing the operand is specified by an 8-bit address field in the instruction. Only 128 lowest bytes of internal data RAM and SFRs can be direct addressed. Direct addresses ues the address values without the # sign. For example, to move the contents fo address 4AH into address 12H the following is used:

```
MOV   12H,  4AH
```

5.1.3 Indirect Addressing

In indirect addressing the instruction specified a register which contains the address of the operand. Both internal and external RAM can be indirectly addressed. Instead of giving an actual address as the operand of an instruction, a pointer to the address can be specified by indicating a register which contains the actual address.

The address register for 8-bit addresses can be R0 or R1 of the selected bank, or the Stack Pointer. The address register for 16-bit addresses can only be the 16-bit data pointer register – DPTR. Registers R0, R1 and DPTR may be used as indirection registers for this purpose, and are preceded by an @ sign to indicate the indirection. For example, to move the number 55H into the address whose value is stored in register R1 the following is used:

```
MOV   @R1,  #55H
```

5.1.4 Register Addressing

The register banks, containing registers R0 through R7, can be accessed by certain instructions which carry a 3-bit register specification within the opcode of the instruction. Instructions that access the registers this way are code efficient because this mode eliminates the need of an extra address byte. When such instruction is executed, one of the eight registers in the selected bank is accessed. For example, to move the contents of register R6 to accumulator A the following is used:

```
MOV    A,     R6
```

5.1.5 Inherent Addressing

Some instructions do not require operands since they do not access memory. For these, the addressing is called inherent, and the main examples are the instructions for return from subroutines and interrupt service routines.

5.1.6 Index Addressing

Only program memory can be accessed with indexed addressing and it can only be read. This addressing mode is intended for reading look-up tables in program memory. A 16-bit base register(either DPTR or PC) points to the base of the table, and the accumulator is set up with the table entry number. Another type of indexed addressing is used in the conditional jump instruction.

In conditional jump, the destination address is computed as the sum of the base pointer and the accumulator.

STC MCU Limited.

5.1.7 Bit Addressing

Many of the instuctions used by MCU are related to single bits of data. This implies that the operands can be individual bits. Examples of such instructions are:

```
SETB    45H       (same as SETB 28.5H)
CLR     P0.3
CPL     ACC.7
```

5.2 Instruction Set Summary

The STC MCU instructions are fully compatible with the traditional 8051's,which are divided among five functional groups:

- Arithmetic
- Logical
- Data transfer
- Boolean variable
- Program branching

Instruction execution speed boost summary :
There are 111 instructions in MCU. For new STC15 series MCU

24 times faster execution speed than the traditional 8051	2
12 times faster execution speed than the traditional 8051	28
8 times faster execution speed than the traditional 8051	19
6 times faster execution speed than the traditional 8051	40
4.8 times faster execution speed than the traditional 8051	8
4 times faster execution speed than the traditional 8051	14

Based on the analysis of frequency of use order statistics, STC15 series MCU instruction execution speed is faster than the traditional 8051 MCU 8 ~ 12 times in the same working environment.

STC MCU Limited.

Instruction execution clock count (for new STC15 series)

1 clock instruction	22
2 clock instruction	37
3 clock instruction	31
4 clock instruction	12
5 clock instruction	8
6 clock instruction	1

It needs 283 clocks to finish executing at one time all 111 instructionsfor STC15 series, whiel it needs 1944 clocks for the traditional 8051 MCU. Obviouly, the speed of executing instruction for STC15 series MCU has beeb greatly enhanced. The average speed of STC15 series is 8~12 times faster than traditional 8051 MCU

The following tables provides a quick reference chart showing all the 8051 and STC15 seires MCU instructions. Once you are familiar with the instruction set, this chart should prove a handy and quick source of reference.

STC15 series MCU with super high-speed CPU core of STC-Y5 works 20% faster than STC early 1T series (such as STC12/STC11/STC10 series) at same clock frequency.

ARITHMETIC OPERATIONS

Mnemonic		Description	Byte	Execution clocks of tradional 8051	Execution clocks of STC15 series (super high-speed 1T 8051 CPU core of STC-Y5)	Efficiency Improved
ADD	A，Rn	Add register to Accumulator	1	12	1	12x
ADD	A，direct	Add ditect byte to Accumulator	2	12	2	6x
ADD	A，@Ri	Add indirect RAM to Accumulator	1	12	2	6x
ADD	A，#data	Add immediate data to Accumulator	2	12	2	6x
ADDC	A，Rn	Add register to Accumulator with Carry	1	12	1	12x
ADDC	A，direct	Add direct byte to Accumulator with Carry	2	12	2	6x
ADDC	A，@Ri	Add indirect RAM to Accumulator with Carry	1	12	2	6x
ADDC	A，#data	Add immediate data to Acc with Carry	2	12	2	6x
SUBB	A，Rn	Subtract Register from Acc wih borrow	1	12	1	6x
SUBB	A，direct	Subtract direct byte from Acc with borrow	2	12	2	6x
SUBB	A，@Ri	Subtract indirect RAM from ACC with borrow	1	12	2	6x
SUBB	A，#data	Substract immediate data from ACC with borrow	2	12	2	6x
INC	A	Increment Accumulator	1	12	1	12x
INC	Rn	Increment register	1	12	2	6x
INC	direct	Increment direct byte	2	12	3	4x
INC	@Ri	Increment direct RAM	1	12	3	4x
DEC	A	Decrement Accumulator	1	12	1	12x
DEC	Rn	Decrement Register	1	12	2	6x
DEC	direct	Decrement direct byte	2	12	3	4x
DEC	@Ri	Decrement indirect RAM	1	12	3	4x
INC	DPTR	Increment Data Pointer	1	24	1	24x
MUL	AB	Multiply A & B	1	48	2	24x
DIV	AB	Divde A by B	1	48	6	8x
DA	A	Decimal Adjust Accumulator	1	12	3	4x

STC MCU Limited.

LOGICAL OPERATIONS

Mnemonic	Description	Byte	Execution clocks of tradional 8051	Execution clocks of STC15 series (super high-speed 1T 8051 CPU core of STC-Y5)	Efficiency Improved
ANL A，Rn	AND Register to Accumulator	1	12	1	12x
ANL A，direct	AND direct btye to Accumulator	2	12	2	6x
ANL A，@Ri	AND indirect RAM to Accumulator	1	12	2	6x
ANL A，#data	AND immediate data to Accumulator	2	12	2	6x
ANL direct，A	AND Accumulator to direct byte	2	12	3	4x
ANL direct，#data	AND immediate data to direct byte	3	24	3	8x
ORL A，Rn	OR register to Accumulator	1	12	1	12x
ORL A，direct	OR direct byte to Accumulator	2	12	2	6x
ORL A，@Ri	OR indirect RAM to Accumulator	1	12	2	6x
ORL A，# data	OR immediate data to Accumulator	2	12	2	6x
ORL direct，A	OR Accumulator to direct byte	2	12	3	4x
ORL direct，#data	OR immediate data to direct byte	3	24	3	8x
XRL A，Rn	Exclusive-OR register to Accumulator	1	12	1	12x
XRL A，direct	Exclusive-OR direct byte to Accumulator	2	12	2	6x
XRL A，@Ri	Exclusive-OR indirect RAM to Accumulator	1	12	2	6x
XRL A，# data	Exclusive-OR immediate data to Accumulator	2	12	2	6x
XRL direct，A	Exclusive-OR Accumulator to direct byte	2	12	3	4x
XRL direct，#data	Exclusive-OR immediate data to direct byte	3	24	3	8x
CLR A	Clear Accumulator	1	12	1	12x
CPL A	Complement Accumulator	1	12	1	12x
RL A	Rotate Accumulator Left	1	12	1	12x
RLC A	Rotate Accumulator Left through the Carry	1	12	1	12x
RR A	Rotate Accumulator Right	1	12	1	12x
RRC A	Rotate Accumulator Right through the Carry	1	12	1	12x
SWAP A	Swap nibbles within the Accumulator	1	12	1	12x

STC MCU Limited.

DATA TRANSFER

Mnemonic		Description	Byte	Execution clocks of tradional 8051	Execution clocks of STC15 series (super high-speed 1T 8051 CPU core of STC-Y5)	Efficiency Improved
MOV	A, Rn	Move register to Accumulator	1	12	1	12x
MOV	A, direct	Move direct byte to Accumulator	2	12	2	6x
MOV	A, @Ri	Move indirect RAM to Accumulator	1	12	2	6x
MOV	A, #data	Move immediate data to Accumulator	2	12	2	6x
MOV	Rn, A	Move Accumulator to register	1	12	1	12x
MOV	Rn, direct	Move direct byte to register	2	24	3	8x
MOV	Rn, #data	Move immediate data to register	2	12	2	6x
MOV	direct, A	Move Accumulator to direct byte	2	12	2	6x
MOV	direct, Rn	Move register to direct byte	2	24	2	12x
MOV	direct, direct	Move direct byte to direct	3	24	3	8x
MOV	direct, @Ri	Move indirect RAM to direct byte	2	24	3	8x
MOV	direct, #data	Move immediate data to direct byte	3	24	3	8x
MOV	@Ri, A	Move Accumulator to indirect RAM	1	12	2	6x
MOV	@Ri, direct	Move direct byte to indirect RAM	2	24	3	8x
MOV	@Ri, #data	Move immediate data to indirect RAM	2	12	2	6x
MOV	DPTR,#data16	Move immdiate data to indirect RAM	3	24	3	8x
MOVC	A, @A+DPTR	Move Code byte relative to DPTR to Acc	1	24	5	4.8x
MOVC	A, @A+PC	Move Code byte relative to PC to Acc	1	24	4	6x
MOVX	A, @Ri	Move on-chip expanded RAM(8-bit addr) to Acc. Read operation	1	24	3	8x
MOVX	@Ri, A	Move Acc to on-chip expanded RAM(8-bit addr).Write operation.	1	24	4	8x
MOVX	A, @DPTR	Move on-chip expanded RAM(16-bit addr) to Acc.Read operation.	1	24	2	12x
MOVX	@DPTR, A	Move Acc to on-chip expanded RAM (16-bit addr). Write operation.	1	24	3	8x
MOVX	A, @Ri	Move Acc to External RAM(8-bit addr). Read operation.	1	24	5xN+2 see the following illustration about the value of N	*Note1
MOVX	@Ri, A	Move Acc to External RAM(8-bit addr). Write operation.	1	24	5×N+3	*Note1
MOVX	A, @DPTR	Move External RAM(16-bit addr) to Acc. Read operation.	1	24	5×N+1	*Note1
MOVX	@DPTR, A	Move Acc to External RAM (16-bit addr). Write operation.	1	24	5×N+2	*Note1
PUSH	direct	Push direct byte onto stack	2	24	3	8x
POP	direct	POP direct byte from stack	2	24	2	12x
XCH	A, Rn	Exchange register with Accumulator	1	12	2	6x
XCH	A,direct	Exchange direct byte with Accumulator	2	12	3	4x
XCH	A, @Ri	Exchange indirect RAM with Accumulator	1	12	3	4x
XCHD	A, @Ri	Exchange low-order Digit indirect RAM with Acc	1	12	3	4x

When EXRTS[1:0] = [0,0], N=1 in above formula;
When EXRTS[1:0] = [0,1], N=2 in above formula;
When EXRTS[1:0] = [1,0], N=4 in above formula;
When EXRTS[1:0] = [1,1], N=8 in above formula;

EXRTS[1：0] are the bit of B0 and B1 BUS_SPEED

STC MCU Limited.

BOOLEAN VARIABLE MANIPULATION

Mnemonic		Description	Byte	Execution clocks of tradional 8051	Execution clocks of STC15 series (super high-speed 1T 8051 CPU core of STC-Y5)	Efficiency Improved
CLR	C	Clear Carry	1	12	1	12x
CLR	bit	Clear direct bit	2	12	3	4x
SETB	C	Set Carry	1	12	1	12x
SETB	bit	Set direct bit	2	12	3	4x
CPL	C	Complement Carry	1	12	1	12x
CPL	bit	Complement direct bit	2	12	3	4x
ANL	C, bit	AND direct bit to Carry	2	24	2	12x
ANL	C, /bit	AND complement of direct bit to Carry	2	24	2	12x
ORL	C, bit	OR direct bit to Carry	2	24	2	12x
ORL	C, /bit	OR complement of direct bit to Carry	2	24	2	12x
MOV	C, bit	Move direct bit to Carry	2	12	2	12x
MOV	bit, C	Move Carry to direct bit	2	24	3	8x
JC	rel	Jump if Carry is set	2	24	3	8x
JNC	rel	Jump if Carry not set	2	24	3	8x
JB	bit, rel	Jump if direct bit is set	3	24	5	4.8x
JNB	bit, rel	Jump if direct bit is not set	3	24	5	4.8x
JBC	bit, rel	Jump if direct bit is set & clear bit	3	24	5	4.8x

STC MCU Limited.

PROGRAM BRANCHING

Mnemonic		Description	Byte	Execution clocks of tradional 8051	Execution clocks of STC15 series (super high-speed 1T 8051 CPU core of STC-Y5)	Efficiency Improved
ACALL	addr11	Absolute Subroutine Call	2	24	4	6x
LCALL	addr16	Long Subroutine Call	3	24	4	6x
RET		Return from Subroutine	1	24	4	6x
RETI		Return from interrupt	1	24	4	6x
AJMP	addr11	Absolute Jump	2	24	3	8x
LJMP	addr16	Long Jump	3	24	4	6x
SJMP	re1	Short Jump (relative addr)	2	24	3	8x
JMP	@A+DPTR	Jump indirect relative to the DPTR	1	24	5	4.8x
JZ	re1	Jump if Accumulator is Zero	2	24	4	6x
JNZ	re1	Jump if Accumulator is not Zero	2	24	4	6x
CJNE	A，direct，re1	Compare direct byte to Acc and jump if not equal	3	24	5	4.8x
CJNE	A，#data，re1	Compare immediate data to Acc and Jump if not equal	3	24	4	6x
CJNE	Rn，#data，re1	Compare immediate data to register and Jump if not equal	3	24	4	6x
CJNE	@Ri，#data，re1	Compare immediate data to indirect and jump if not equal	3	24	5	4.8x
DJNZ	Rn，re1	Decrement register and jump if not Zero	2	24	4	6x
DJNZ	direct，re1	Decrement direct byte and Jump if not Zero	3	24	5	4.8x
NOP		No Operation	1	12	1	12x

Update Date 2011-10-17

STC MCU Limited.

5.3 Instruction Definitions of Traditional 8051 MCU

ACALL addr 11

Function: Absolute Call

Description: ACALL unconditionally calls a subroutine located at the indicated address.The instruction increments the PC twice to obtain the address of the following instruction, then pushes the 16-bit result onto the stack (low-order byte first) and increments the Stack Pointer twice. The destination address is obtained by suceesively concatenating the five high-order bits of the incremented PC opcode bits 7-5,and the second byte of the instruction. The subroutine called must therefore start within the same 2K block of the program memory as the first byte of the instruction following ACALL. No flags are affected.

Example: Initially SP equals 07H. The label “SUBRTN” is at program memory location 0345H. After executingthe instruction,

ACALL SUBRTN

at location 0123H, SP will contain 09H, internal RAM locations 08H and 09H will contain 25H and 01H, respectively, and the PC will contain 0345H.

Bytes: 2

Cycles: 2

Encoding:

a10 a9 a8 1	0 0 0 1	a7 a6 a5 a4	a3 a2 a1 a0

Operation: ACALL

(PC)← **(PC)+ 2**
(SP)←**(SP) + 1**
((SP)) ← **(PC_{7-0})**
(SP)←**(SP) + 1**
((SP))←**(PC_{15-8})**
(PC_{10-0})← **page address**

ADD A,<src-byte>

Function: Add

Description: ADD adds the byte variable indicated to the Accumulator, leaving the result in the Accumulator. The carry and auxiliary-carry flags are set, respectively, if there is a carry-out from bit 7 or bit 3, and cleared otherwise. When adding unsigned integers, the carry flag indicates an overflow occured.

OV is set if there is a carry-out of bit 6 but not out of bit 7, or a carry-out of bit 7 but not bit 6; otherwise OV is cleared. When adding signed integers, OV indicates a negative number produced as the sum of two positive operands, or a positive sum from two negative operands.

Four source operand addressing modes are allowed: register,direct register-indirect, or immediate.

Example: The Accumulator holds 0C3H(11000011B) and register 0 holds 0AAH (10101010B). The instruction,

ADD A,R0

will leave 6DH (01101101B) in the Accumulator with the AC flag cleared and both the carry flag and OV set to 1.

STC MCU Limited.

ADD A,Rn

Bytes: 1

Cycles: 1

Encoding:

0 0 1 0	1 r r r

Operation: ADD
(A)←**(A) + (Rn)**

ADD A,direct

Bytes: 2

Cycles: 1

Encoding:

0 0 1 0	0 1 0 1	direct address

Operation: ADD
(A)←**(A) + (direct)**

ADD A,@Ri

Bytes: 1

Cycles: 1

Encoding:

0 0 1 0	0 1 1 i

Operation: ADD
(A)←**(A) + ((Ri))**

ADD A,#data

Bytes: 2

Cycles: 1

Encoding:

0 0 1 0	0 1 0 0	immediate data

Operation: ADD
(A)←**(A) + #data**

STC MCU Limited.

ADDC A,<src-byte>

Function: Add with Carry

Description: ADDC simultaneously adds the byte variable indicated, the Carry flag and the Accumulator, leaving the result in the Accumulator. The carry and auxiliary-carry flags are set, respectively, if there is a carry-out from bit 7 or bit 3, and cleared otherwise. When adding unsigned integers, the carry flag indicates an overflow occured.
OV is set if there is a carry-out of bit 6 but not out of bit 7, or a carry-out of bit 7 but not out of bit 6; otherwise OV is cleared. When adding signed integers, OV indicates a negative number produced as the sum of two positive operands or a positive sum from two negative operands.
Four source operand addressing modes are allowed: register, direct, register-indirect, or immediate.

Example: The Accumulator holds 0C3H(11000011B) and register 0 holds 0AAH (10101010B) with the Carry. The instruction,
ADDC A,R0
will leave 6EH (01101101B) in the Accumulator with the AC flag cleared and both the carry flag and OV set to 1.

ADDC A,Rn

Bytes: 1

Cycles: 1

Encoding:

0 0 1 1	1 r r r

Operation: ADDC
(A)←(A) + (C) + (Rn)

ADDC A,direct

Bytes: 2

Cycles: 1

Encoding:

0 0 1 1	0 1 0 1	direct address

Operation: ADDC
(A)←(A) + (C) + (direct)

ADDC A,@Ri

Bytes: 1

Cycles: 1

Encoding:

0 0 1 1	0 1 1 i

Operation: ADDC
(A)←(A) + (C) + ((Ri))

ADDC A,#data

Bytes: 2

Cycles: 1

Encoding:

0 0 1 1	0 1 0 0	immediate data

Operation: ADDC
(A)←(A) + (C) + #data

AJMP addr 11

Function: Absolute Jump

Description: AJMP transfers program execution to the indicated address, which is formed at run-time by concatenating the high-order five bits of the PC (after incrementing the PC twice), opcode bits 7-5, and the second byte of the instruction. The destination must therefore be within the same 2K block of program memory as the first byte of the instruction following AJMP.

Example: The label “JMPADR” is at program memory location 0123H. The instruction,

AJMP JMPADR

is at location 0345H and will load the PC with 0123H.

Bytes: 2

Cycles: 2

Encoding:

a10 a9 a8 0	0 0 0 1	a7 a6 a5 a4	a3 a2 a1 a0

Operation: AJMP
(PC)← (PC)+ 2
($PC_{10\text{-}0}$)← page address

STC MCU Limited.

ANL <dest-byte> , <src-byte>

Function: Logical-AND for byte variables

Description: ANL performs the bitwise logical-AND operation between the variables indicated and stores the results in the destination variable. No flags are affected.

The two operands allow six addressing mode combinations. When the destination is the Accumulator, the source can use register, direct, register-indirect, or immediate addressing; when the destination is a direct address, the source can be the Accumulator or immediate data.

Note: When this instruction is used to modify an output port, the value used as the original port data will be read from the output data latch not the input pins.

Example: If the Accumulator holds 0C3H(11000011B) and register 0 holds 55H (01010101B) then the instruction,

ANL A,R0

will leave 41H (01000001B) in the Accumulator.

When the destination is a directly addressed byte, this instruction will clear combinations of bits in any RAM location or hardware register. The mask byte determining the pattern of bits to be cleared would either be a constant contained in the instruction or a value computed in the Accumulator at run-time. The instruction,

ANL Pl, #01110011B

will clear bits 7, 3, and 2 of output port 1.

STC MCU Limited.

ANL A,Rn

Bytes: 1

Cycles: 1

Encoding:

0 1 0 1	1 r r r

Operation: ANL
(A)←**(A)** ∧ (Rn)

ANL A,direct

Bytes: 2

Cycles: 1

Encoding:

0 1 0 1	0 1 0 1	direct address

Operation: ANL
(A)←**(A)** ∧ (direct)

ANL A,@Ri

Bytes: 1

Cycles: 1

Encoding:

0 1 0 1	0 1 1 i

Operation: ANL
(A)←**(A)** ∧ ((Ri))

ANL A,#data

Bytes: 2

Cycles: 1

Encoding:

0 1 0 1	0 1 0 0	immediate data

Operation: ANL
(A)←**(A)** ∧ #data

ANL direct,A

Bytes: 2

Cycles: 1

Encoding:

0 1 0 1	0 0 1 0	direct address

Operation: ANL
(direct)←**(direct)** ∧ (A)

ANL direct,#data

Bytes: 3

Cycles: 2

Encoding:

0 1 0 1	0 0 1 1	direct address	immediate data

Operation: ANL
(direct)←**(direct)** ∧ #data

STC MCU Limited.

ANL C , <src-bit>

Function: Logical-AND for bit variables

Description: If the Boolean value of the source bit is a logical 0 then clear the carry flag; otherwise leave the carry flag in its current state. A slash (" / ") preceding the operand in the assembly language indicates that the logical complement of the addressed bit is used as the source value, *but the source bit itself is not affceted.* No other flsgs are affected.

Only direct addressing is allowed for the source operand.

Example: Set the carry flag if, and only if, P1.0 = 1, ACC. 7 = 1, and OV = 0:

```
MOV   C, P1.0          ;LOAD CARRY WITH INPUT PIN STATE
ANL   C, ACC.7         ;AND CARRY WITH ACCUM. BIT.7
ANL   C, /OV           ;AND WITH INVERSE OF OVERFLOW FLAG
```

ANL C,bit

Bytes: 2

Cycles: 2

Encoding:

1 0 0 0	0 0 1 0	bit address

Operation: ANL
(C) ← **(C)** ∧ (bit)

ANL C, /bit

Bytes: 2

Cycles: 2

Encoding:

1 0 1 1	0 0 0 0	bit address

Operation: ANL

(C)←**(C)** ∧ $\overline{\text{(bit)}}$

CJNE <dest-byte>, <src-byte>, rel

Function: Compare and Jump if Not Equal

Description: CJNE compares the magnitudes of the first two operands, and branches if their values are not equal. The branch destination is computed by adding the signed relative-displacement in the last instruction byte to the PC, after incrementing the PC to the start of the next instruction. The carry flag is set if the unsigned integer value of <dest-byte> is less than the unsigned integer value of <src-byte>; otherwise, the carry is cleared. Neither operand is affected.

The first two operands allow four addressing mode combinations: the Accumulator may be compared with any directly addressed byte or immediate data, and any indirect RAM location or working register can be compared with an immediate constant.

Example: The Accumulator contains 34H. Register 7 contains 56H. The first instruction in the sequence

```
                CJNE    R7,#60H, NOT-EQ
;               . . .   . . . . .       ; R7 = 60H.
NOT_EQ:         JC      REQ_LOW         ; IF R7 < 60H.
;               . . .   . . . . .       ; R7 > 60H.
```

sets the carry flag and branches to the instruction at label NOT-EQ. By testing the carry flag, this instruction determines whether R7 is greater or less than 60H.

If the data being presented to Port 1 is also 34H, then the instruction,

WAIT: CJNE A,P1,WAIT

clears the carry flag and continues with the next instruction in sequence, since the Accumulator does equal the data read from P1. (If some other value was being input on Pl, the program will loop at this point until the P1 data changes to 34H.)

CJNE A,direct,rel

Bytes: 3

Cycles: 2

Encoding:

1 0 1 1	0 1 0 0	direct address	rel. address

Operation:

(PC) ← **(PC) + 3**
IF (A) < > *(direct)*
THEN
(PC) ← **(PC) +** *relative offset*
IF (A) < *(direct)*
THEN
(C) ← **1**
ELSE
(C) ← **0**

STC MCU Limited.

CJNE A,#data,rel

Bytes: 3

Cycles: 2

Encoding:

1 0 1 1	0 1 0 1	immediata data	rel. address

Operation:

(PC) ← **(PC) + 3**
IF (A) < > *(data)*
THEN
(PC) ← **(PC) +** *relative offset*
IF (A) < *(data)*
THEN
(C) ← **1**
ELSE
(C) ← **0**

CJNE Rn,#data,rel

Bytes: 3

Cycles: 2

Encoding:

1 0 1 1	1 r r r	immediata data	rel. address

Operation:

(PC) ← **(PC) + 3**
IF (Rn) < > *(data)*
THEN
(PC) ← **(PC) +** *relative offset*
IF (Rn) < *(data)*
THEN
(C) ← **1**
ELSE
(C) ← **0**

CJNE @Ri,#data,rel

Bytes: 3

Cycles: 2

Encoding:

1 0 1 1	0 1 1 i	immediate data	rel. address

Operation:

(PC) ← **(PC) + 3**
IF ((Ri)) < > *(data)*
THEN
(PC) ← **(PC) +** *relative offset*
IF ((Ri)) < *(data)*
THEN
(C) ← **1**
ELSE
(C) ← **0**

STC MCU Limited.

CLR A

Function: Clear Accumulator

Description: The Aecunmlator is cleared (all bits set on zero). No flags are affected.

Example: The Accumulator contains 5CH (01011100B). The instruction,

CLR A

will leave the Accumulator set to 00H (00000000B).

Bytes: 1

Cycles: 1

Encoding:

1 1 1 0	0 1 0 0

Operation: CLR
(A)← 0

CLR bit

Function: Clear bit

Description: The indicated bit is cleared (reset to zero). No other flags are affected. CLR can operate on the carry flag or any directly addressable bit.

Example: Port 1 has previously been written with 5DH (01011101B). The instruction,

CLR P1.2

will leave the port set to 59H (01011001B).

CLR C

Bytes: 1

Cycles: 1

Encoding:

1 1 0 0	0 0 1 1

Operation: CLR
(C) ← 0

CLR bit

Bytes: 2

Cycles: 1

Encoding:

1 1 0 0	0 0 1 0	bit address

Operation: CLR
(bit) ← 0

STC MCU Limited.

CPL A

Function: Complement Accumulator

Description: Each bit of the Accumulator is logically complemented (one's complement). Bits which previously contained a one are changed to a zero and vice-versa. No flags are affected.

Example: The Accumulator contains 5CH(01011100B). The instruction,

CPL A

will leave the Accumulator set to 0A3H (101000011B).

Bytes: 1

Cycles: 1

Encoding:

1 1 1 1	0 1 0 0

Operation: CPL

$(A) \leftarrow \overline{(A)}$

CPL bit

Function: Complement bit

Description: The bit variable specified is complemented. A bit which had been a one is changed to zero and vice-versa. No other flags are affected. CLR can operate on the carry or any directly addressable bit.

Note:When this instruction is used to modify an output pin, the value used as the original data will be read from the output data latch, not the input pin.

Example: Port 1 has previously been written with 5BH(01011011B). The instruction,

CPL P1.1

CPL P1.2

will leave the port set to 5DH(01011101B).

CPL C

Bytes: 1

Cycles: 1

Encoding:

1 0 1 1	0 0 1 1

Operation: CPL

$(C) \leftarrow \overline{(C)}$

CPL bit

Bytes: 2

Cycles: 1

Encoding:

1 0 1 1	0 0 1 0	bit address

Operation: CPL

$(bit) \leftarrow \overline{(bit)}$

STC MCU Limited.

DA A

Function: Decimal-adjust Accumulator for Addition

Description: DA A adjusts the eight-bit value in the Accumulator resulting from the earlier addition of two variables (each in packed-BCD format), producing two four-bit digits.Any ADD or ADDC instruction may have been used to perform the addition.

If Accumulator bits 3-0 are greater than nine (xxxx1010-xxxx1111), or if the AC flag is one, six is added to the Accumulator producing the proper BCD digit in the low-order nibble. This internal addition would set the carry flag if a carry-out of the low-order four-bit field propagated through all high-order bits, but it would not clear the carry flag otherwise.

If the carry flag is now set or if the four high-order bits now exceed nine(1010xxxx-111xxxx), these high-order bits are incremented by six, producing the proper BCD digit in the high-order nibble. Again, this would set the carry flag if there was a carry-out of the high-order bits, but wouldn't clear the carry. The carry flag thus indicates if the sum of the original two BCD variables is greater than 100, allowing multiple precision decimal addition. OV is not affected.

All of this occurs during the one instruction cycle. Essentially, this instruction performs the decimal conversion by adding 00H, 06H, 60H, or 66H to the Accumulator, depending on initial Accumulator and PSW conditions.

Note: DA A cannot simply convert a hexadecimal number in the Accumulator to BCD notation, nor does DA A apply to decimal subtraction.

Example: The Accumulator holds the value 56H(01010110B) representing the packed BCD digits of the decimal number 56. Register 3 contains the value 67H (01100111B) representing the packed BCD digits of the decimal number 67.The carry flag is set. The instruction sequence.

```
ADDC   A,R3
DA     A
```

will first perform a standard twos-complement binary addition, resulting in the value 0BEH (10111110) in the Accumulator. The carry and auxiliary carry flags will be cleared.

The Decimal Adjust instruction will then alter the Accumulator to the value 24H (00100100B), indicating the packed BCD digits of the decimal number 24, the low-order two digits of the decimal sum of 56,67, and the carry-in. The carry flag will be set by the Decimal Adjust instruction, indicating that a decimal overflow occurred. The true sum 56, 67, and 1 is 124.

BCD variables can be incremented or decremented by adding 01H or 99H. If the Accumulator initially holds 30H (representing the digits of 30 decimal), then the instruction sequence,

```
ADD    A,#99H
DA     A
```

will leave the carry set and 29H in the Accumulator, since 30+99=129. The low-order byte of the sum can be interpreted to mean 30 – 1 = 29.

STC MCU Limited.

Bytes: 1

Cycles: 1

Encoding:

1 1 0 1	0 1 0 0

Operation: DA

-contents of Accumulator are BCD

IF [[(A_{3-0}) > 9] V [(AC) = 1]]

THEN(A_{3-0}) ← (**A_{3-0}**) + 6

AND

IF [[(A_{7-4}) > 9] V [(C) = 1]]

THEN (A_{7-4}) ← (**A_{7-4}**) + 6

DEC byte

Function: Decrement

Description: The variable indicated is decremented by 1. An original value of 00H will underflow to 0FFH.

No flags are affected. Four operand addressing modes are allowed: accumulator, register, direct, or register-indirect.

Note: When this instruction is used to modify an output port, the value used as the original port data will be read from the output data latch, not the input pins.

Example: Register 0 contains 7FH (01111111B). Internal RAM locations 7EH and 7FH contain 00H and 40H, respectively. The instruction sequence,

```
DEC   @R0
DEC   R0
DEC   @R0
```

will leave register 0 set to 7EH and internal RAM locations 7EH and 7FH set to 0FFH and 3FH.

STC MCU Limited.

DEC A

Bytes: 1

Cycles: 1

Encoding:

0 0 0 1	0 1 0 0

Operation: DEC

(A)←(**A**) −1

DEC Rn

Bytes: 1

Cycles: 1

Encoding:

0 0 0 1	1 r r r

Operation: DEC

(Rn)←**(Rn) - 1**

DEC direct

Bytes: 2

Cycles: 1

Encoding:

0 0 0 1	0 1 0 1	direct address

Operation: DEC

(direct)←**(direct)** −1

DEC @Ri

Bytes: 1

Cycles: 1

Encoding:

0 0 0 1	0 1 1 i

Operation: DEC

((Ri))←**((Ri)) - 1**

DIV AB

Function: Divide

Description: DIV AB divides the unsigned eight-bit integer in the Accumulator by the unsigned eight-bit integer in register B. The Accumulator receives the integer part of the quotient; register B receives the integer remainder. The carry and OV flags will be cleared.

Exception: if B had originally contained 00H, the values returned in the Accumulator and B-register will be undefined and the overflow flag will be set. The carry flag is cleared in any case.

Example: The Accumulator contains 251(OFBH or 11111011B) and B contains 18(12H or 00010010B). The instruction,

```
DIV   AB
```

will leave 13 in the Accumulator (0DH or 00001101B) and the value 17 (11H or 00010010B) in B, since 251 = (13×18) + 17. Carry and OV will both be cleared.

Bytes: 1

Cycles: 4

Encoding:

1 0 0 0	0 1 0 0

Operation: DIV

$(A)_{15-8}$
$(B)_{7-0}$ ← (A)/(B)

STC MCU Limited.

DJNZ <byte>, <rel-addr>

Function: Decrement and Jump if Not Zero

Description: DJNZ decrements the location indicated by 1, and branches to the address indicated by the second operand if the resulting value is not zero. An original value of 00H will underflow to 0FFH. No flags are afected. The branch destination would be computed by adding the signed relative-displacement value in the last instruction byte to the PC, after incrementing the PC to the first byte of the following instruction.

The location decremented may be a register or directly addressed byte.

Note: When this instruction is used to modify an output port, the value used as the original port data will be read from the output data latch, not the input pins.

Example: Internal RAM locations 40H, 50H, and 60H contain the values 01H, 70H, and 15H, respectively. The instruction sequence,

```
DJNZ    40H, LABEL_1
DJNZ    50H, LABEL_2
DJNZ    60H, LABEL_3
```

will cause a jump to the instruction at label LABEL_2 with the values 00H, 6FH, and 15H in the three RAM locations. The first jump was not taken because the result was zero.

This instruction provides a simple way of executing a program loop a given number of times, or for adding a moderate time delay (from 2 to 512 machine cycles) with a single instruction The instruction sequence,

```
            MOV     R2,#8
TOOOLE:     CPL     P1.7
            DJNZ    R2, TOOGLE
```

will toggle P1.7 eight times, causing four output pulses to appear at bit 7 of output Port 1. Each pulse will last three machine cycles; two for DJNZ and one to alter the pin.

STC MCU Limited.

DJNZ Rn,rel

Bytes: 2

Cycles: 2

Encoding:

1 1 0 1	1 r r r	rel. address

Operation: DJNZ

(PC) ← **(PC) + 2**

(Rn) ← **(Rn) – 1**

IF (Rn) > 0 or (Rn) < 0

THEN

(PC) ← **(PC)+ rel**

DJNZ direct, rel

Bytes: 3

Cycles: 2

Encoding:

1 1 0 1	0 1 0 1	direct address	rel. address

Operation: DJNZ
(PC) ← **(PC) + 2**
(direct) ← **(direct) – 1**
IF (direct) > 0 or (direct) < 0
THEN
(PC) ← **(PC) + rel**

INC <byte>

Function: Increment

Description: INC increments the indicated variable by 1. An original value of 0FFH will overflow to 00H.No flags are affected. Three addressing modes are allowed: register, direct, or register-indirect.

Note: When this instruction is used to modify an output port, the value used as the original port data will be read from the output data latch, not the input pins.

Example: Register 0 contains 7EH (011111110B). Internal RAM locations 7EH and 7FH contain 0FFH and 40H, respectively. The instruction sequence,

```
INC   @R0
INC    R0
INC   @R0
```

will leave register 0 set to 7FH and internal RAM locations 7EH and 7FH holding (respectively) 00H and 41H.

STC MCU Limited

INC A

Bytes: 1

Cycles: 1

Encoding:

0 0 0 0	0 1 0 0

Operation: INC
(A) ← (A)+1

INC Rn

Bytes: 1

Cycles: 1

Encoding:

0 0 0 0	1 r r r

Operation: INC
(Rn) ← (Rn)+1

INC direct

Bytes: 2

Cycles: 1

Encoding:

0 0 0 0	0 1 0 1	direct address

Operation: INC
(direct)←**(direct)** + 1

INC @Ri

Bytes: 1

Cycles: 1

Encoding:

0 0 0 0	0 1 1 i

Operation: INC
((Ri))←((Ri)) + 1

INC DPTR

Function: Increment Data Pointer

Description: Increment the 16-bit data pointer by 1. A 16-bit increment (modulo 2^{16}) is performed; an overflow of the low-order byte of the data pointer (DPL) from 0FFH to 00H will increment the high-order-byte (DPH). No flags are affected.
This is the only 16-bit register which can be incremented.

Example: Register DPH and DPL contains 12H and 0FEH,respectively. The instruction sequence,
INC DPTR
INC DPTR
INC DPTR
will change DPH and DPL to 13H and 01H.

Bytes: 1

Cycles: 2

Encoding:

1 0 1 0	0 0 1 1

Operation: INC
(DPTR) ← (DPTR)+1

JB bit, rel

Function: Jump if Bit set

Description: If the indicated bit is a one, jump to the address indicated; otherwise proceed with the next instruction. The branch destination is computed by adding the signed relative-displacement in the third instruction byte to the PC, after incrementing the PC to the first byte of the next instruction. *The bit tested is not modified. No flags are affected.*

Example: The data present at input port 1 is 11001010B. The Accumulator holds 56 (01010110B). The instruction sequence,
JB P1.2, LABEL1
JB ACC.2, LABEL2
will cause program execution to branch to the instruction at label LABEL2.

Bytes: 3

Cycles: 2

Encoding:

0 0 1 0	0 0 0 0	bit address	rel. address

Operation: JB
(PC) ← (PC)+ 3
IF (bit) = 1
THEN
(PC) ← (PC) + rel

STC MCU Limited

JBC bit, rel

Function: Jump if Bit is set and Clear bit

Description: If the indicated bit is one,branch to the address indicated;otherwise proceed with the next instruction.*The bit wili not be cleared if it is already a zero.* The branch destination is computed by adding the signed relative-displacement in the third instruction byte to the PC, after incrementing the PC to the first byte of the next instruction. No flags are affected.

Note: When this instruction is used to test an output pin, the value used as the original data will be read from the output data latch, not the input pin.

Example: The Accumulator holds 56H (01010110B). The instruction sequence,

```
JBC     ACC.3, LABEL1
JBC     ACC.2, LABEL2
```

will cause program execution to continue at the instruction identified by the label LABEL2, with the Accumulator modified to 52H (01010010B).

Bytes: 3

Cycles: 2

Encoding:

0 0 0 1	0 0 0 0	bit address	rel. address

Operation:

```
JBC
(PC) ← (PC)+ 3
IF  (bit) = 1
   THEN
        (bit) ← 0
        (PC) ← (PC) + rel
```

JC rel

Function: Jump if Carry is set

Description: If the carry flag is set, branch to the address indicated; otherwise proceed with the next instruction. The branch destination is computed by adding the signed relative-displacement in the second instruction byte to the PC, after incrementing the PC twice.No flags are affected.

Example: The carry flag is cleared. The instruction sequence,

```
JC      LABEL1
CPL     C
JC      LABEL2s
```

will set the carry and cause program execution to continue at the instruction identified by the label LABEL2.

Bytes: 2

Cycles: 2

Encoding:

0 1 0 0	0 0 0 0	rel. address

Operation:

```
JC
(PC) ← (PC)+ 2
IF  (C) = 1
   THEN
        (PC) ← (PC) + rel
```

STC MCU Limited.

JMP @A+DPTR

Function: Jump indirect

Description: Add the eight-bit unsigned contents of the Accumulator with the sixteen-bit data pointer, and load the resulting sum to the program counter. This will be the address for subsequent instruction fetches. Sixteen-bit addition is performed (modulo 2^{16}): a carry-out from the low-order eight bits propagates through the higher-order bits. Neither the Accumulator nor the Data Pointer is altered. No flags are affected.

Example: An even number from 0 to 6 is in the Accumulator. The following sequence of instructions will branch to one of four AJMP instructions in a jump table starting at JMP_TBL:

```
                MOV     DPTR, #JMP_TBL
                JMP     @A+DPTR
JMP-TBL:        AJMP    LABEL0
                AJMP    LABEL1
                AJMP    LABEL2
                AJMP    LABEL3
```

If the Accumulator equals 04H when starting this sequence, execution will jump to label LABEL2. Remember that AJMP is a two-byte instruction, so the jump instructions start at every other address.

Bytes: 1

Cycles: 2

Encoding:

0 1 1 1	0 0 1 1

Operation: JMP

(PC) ← **(A) + (DPTR)**

STC MCU Limited.

JNB bit, rel

Function: Jump if Bit is not set

Description: If the indicated bit is a zero, branch to the indicated address; otherwise proceed with the next instruction. The branch destination is computed by adding the signed relative-displacement in the third instruction byte to the PC, after incrementing the PC to the first byte of the next instruction. *The bit tested is not modified.* No flags are affected.

Example: The data present at input port 1 is 11001010B. The Accumulator holds 56H (01010110B). The instruction sequence,

```
JNB     P1.3, LABEL1
JNB     ACC.3, LABEL2
```

will cause program execution to continue at the instruction at label LABEL2

Bytes: 3

Cycles: 2

Encoding:

0 0 1 1	0 0 0 0	bit address	rel. address

Operation: JNB

(PC) ← **(PC)+ 3**

IF (bit) = 0

THEN (PC) ← **(PC) + rel**

JNC rel

Function: Jump if Carry not set

Description: If the carry flag is a zero, branch to the address indicated; otherwise proceed with the next instruction. The branch destination is computed by adding the signed relative-displacement in the second instruction byte to the PC, after incrementing the PC twice to point to the next instruction. The carry flag is not modified

Example: The carry flag is set. The instruction sequence,

```
JNC   LABEL1
CPL   C
JNC   LABEL2
```

will clear the carry and cause program execution to continue at the instruction identified by the label LABEL2.

Bytes: 2

Cycles: 2

Encoding:

0 1 0 1	0 0 0 0	rel. address

Operation:

JNC
(PC) ← **(PC)+ 2**
IF (C) = 0
THEN (PC) ← **(PC) + rel**

JNZ rel

Function: Jump if Accumulator Not Zero

Description: If any bit of the Accumulator is a one, branch to the indicated address; otherwise proceed with the next instruction. The branch destination is computed by adding the signed relative-displacement in the second instruction byte to the PC, after incrementing the PC twice. The Accumulator is not modified. No flags are affected.

Example: The Accumulator originally holds 00H. The instruction sequence,

```
JNZ   LABEL1
INC   A
JNZ   LAEEL2
```

will set the Accumulator to 01H and continue at label LABEL2.

Bytes: 2

Cycles: 2

Encoding:

0 1 1 1	0 0 0 0	rel. address

Operation:

JNZ
(PC) ← **(PC)+ 2**
IF (A) ≠ 0
THEN (PC) ← **(PC) + rel**

STC MCU Limited.

JZ rel

Function: Jump if Accumulator Zero

Description: If all bits of the Accumulator are zero, branch to the address indicated; otherwise proceed with the next instruction. The branch destination is computed by adding the signed relative-displacement in the second instruction byte to the PC, after incrementing the PC twice. The Accumulator is not modified. No flags are affected.

Example: The Accumulator originally contains 01H. The instruction sequence,
JZ LABEL1
DEC A
JZ LAEEL2
will change the Accumulator to 00H and cause program execution to continue at the instruction identified by the label LABEL2.

Bytes: 2

Cycles: 2

Encoding:

0 1 1 0	0 0 0 0	rel. address

Operation: JZ
(PC) ← **(PC)+ 2**
IF (A) = 0
THEN (PC) ← **(PC) + rel**

LCALL addr16

Function: Long call

Description: LCALL calls a subroutine loated at the indicated address. The instruction adds three to the program counter to generate the address of the next instruction and then pushes the 16-bit result onto the stack (low byte first), incrementing the Stack Pointer by two. The high-order and low-order bytes of the PC are then loaded, respectively, with the second and third bytes of the LCALL instruction. Program execution continues with the instruction at this address. The subroutine may therefore begin anywhere in the full 64K-byte program memory address space. No flags are affected.

Example: Initially the Stack Pointer equals 07H. The label “SUT2N” is assigned to program memory location 1234H. After executing the instruction,

LCALL SUT2N

at location 0123H, the Stack Pointer will contain 09H, internal RAM locations 08H and 09H will contain 26H and 01H, and the PC will contain 1234H.

Bytes: 3

Cycles: 2

Encoding:

0 0 0 1	0 0 1 0	addr15-addr8	addr7-addr0

Operation: LCALL
(PC) ← **(PC) + 3**
(SP) ← **(SP) + 1**
((SP)) ← **(PC_{7-0})**
(SP) ← **(SP) + 1**
((SP)) ← **(PC_{15-8})**
(PC) ← **$addr_{15-0}$**

STC MCU Limited.

LJMP addr16

Function: Long Jump

Description: LJMP causes an unconditional branch to the indicated address, by loading the high-order and low-order bytes of the PC (respectively) with the second and third instruction bytes. The destination may therefore be anywhere in the full 64K program memory address space. No flags are affected.

Example: The label "JMPADR" is assigned to the instruction at program memory location 1234H. The instruction,

```
LJMP    JMPADR
```

at location 0123H will load the program counter with 1234H.

Bytes: 3

Cycles: 2

Encoding:

0 0 0 0	0 0 1 0	addr15-addr8	addr7-addr0

Operation: LJMP

(PC) ← $\mathbf{addr}_{15\text{-}0}$

MOV <dest-byte> , <src-byte>

Function: Move byte variable

Description: The byte variable indicated by the second operand is copied into the location specified by the first operand. The source byte is not affected. No other register or flag is affected.

This is by far the most flexible operation. Fifteen combinations of source and destination addressing modes are allowed.

Example: Internal RAM location 30H holds 40H. The value of RAM location 40H is 10H. The data present at input port 1 is 11001010B (0CAH).

```
MOV     R0, #30H    ;R0< = 30H
MOV     A, @R0      ;A < = 40H
MOV     R1, A       ;R1 < = 40H
MOV     B, @Rl      ;B < = 10H
MOV     @Rl, Pl     ;RAM (40H) < = 0CAH
MOV     P2, P1      ;P2  #0CAH
```

leaves the value 30H in register 0,40H in both the Accumulator and register 1,10H in register B, and 0CAH(11001010B) both in RAM location 40H and output on port 2.

MOV A,Rn

Bytes: 1

Cycles: 1

Encoding:

1 1 1 0	1 r r r

Operation: MOV

(A) ← **(Rn)**

STC MCU Limited.

***MOV A,direct**

Bytes: 2

Cycles: 1

Encoding:

1 1 1 0	0 1 0 1	direct address

Operation: MOV
(A)← (direct)

***MOV A, ACC is not a valid instruction**

MOV A,@Ri

Bytes: 1

Cycles: 1

Encoding:

1 1 1 0	0 1 1 i

Operation: MOV
(A) ← ((Ri))

MOV A,#data

Bytes: 2

Cycles: 1

Encoding:

0 1 1 1	0 1 0 0	immediate data

Operation: MOV
(A)← #data

MOV Rn, A

Bytes: 1

Cycles: 1

Encoding:

1 1 1 1	1 r r r

Operation: MOV
(Rn)←(A)

MOV Rn,direct

Bytes: 2

Cycles: 2

Encoding:

1 0 1 0	1 r r r	direct addr.

Operation: MOV
(Rn)←(direct)

MOV Rn,#data

Bytes: 2

Cycles: 1

Encoding:

0 1 1 1	1 r r r	immediate data

Operation: MOV
(Rn) ← #data

STC MCU Limited.

MOV direct, A

Bytes: 2

Cycles: 1

Encoding:

1 1 1 1	0 1 0 1	direct address

Operation: MOV
(direct) ← **(A)**

MOV direct, Rn

Bytes: 2

Cycles: 2

Encoding:

1 0 0 0	1 r r r	direct address

Operation: MOV
(direct) ← **(Rn)**

MOV direct, direct

Bytes: 3

Cycles: 2

Encoding:

1 0 0 0	0 1 0 1	dir.addr. (src)	dir.addr. (dest)

Operation: MOV
(direct)← **(direct)**

MOV direct, @Ri

Bytes: 2

Cycles: 2

Encoding:

1 0 0 0	0 1 1 i	direct addr.

Operation: MOV
(direct)←**((Ri))**

MOV direct,#data

Bytes: 3

Cycles: 2

Encoding:

0 1 1 1	0 1 0 1	direct address	immediate data

Operation: MOV
(direct) ← **#data**

MOV @Ri, A

Bytes: 1

Cycles: 1

Encoding:

1 1 1 1	0 1 1 i

Operation: MOV
((Ri)) ← **(A)**

STC MCU Limited.

MOV @Ri, direct

Bytes: 2

Cycles: 2

Encoding:

1 0 1 0	0 1 1 i	direct addr.

Operation: MOV
((Ri)) ← (direct)

MOV @Ri, #data

Bytes: 2

Cycles: 1

Encoding:

0 1 1 1	0 1 1 i	immediate data

Operation: MOV
((Ri)) ← #data

MOV <dest-bit> , <src-bit>

Function: Move bit data

Description: The Boolean variable indicated by the second operand is copied into the location specified by the first operand. One of the operands must be the carry flag; the other may be any directly addressable bit. No other register or flag is affected.

Example: The carry flag is originally set. The data present at input Port 3 is 11000101B. The data previously written to output Port 1 is 35H (00110101B).

```
MOV     P1.3, C
MOV     C, P3.3
MOV     P1.2, C
```

will leave the carry cleared and change Port 1 to 39H (00111001B).

MOV C,bit

Bytes: 2

Cycles: 1

Encoding:

1 0 1 0	0 0 1 0	bit address

Operation: MOV
(C) ← (bit)

MOV bit,C

Bytes: 2

Cycles: 2

Encoding:

1 0 0 1	0 0 1 0	bit address

Operation: MOV
(bit)← (C)

STC MCU Limited.

MOV DPTR , #data 16

Function: Load Data Pointer with a 16-bit constant

Description: The Data Pointer is loaded with the 16-bit constant indicated.The 16-bit constant is loaded into the second and third bytes of the instruction. The second byte (DPH) is the high-order byte, while the third byte (DPL) holds the low-order byte. No flags are affected.
This is the only instruction which moves 16 bits of data at once.

Example: The instruction,
MOV DPTR, #1234H
will load the value 1234H into the Data Pointer: DPH will hold 12H and DPL will hold 34H.

Bytes: 3

Cycles: 2

Encoding:

1 0 0 1	0 0 0 0	immediate data 15-8	immediate data7-0

Operation: MOV
(DPTR) ← #data$_{15\text{-}0}$
DPH DPL ← #data$_{15\text{-}8}$ #data$_{7\text{-}0}$

MOVC A , @A+ <base-reg>

Function: Move Code byte

Description: The MOVC instructions load the Accumulator with a code byte, or constant from program memory. The address of the byte fetched is the sum of the original unsigned eight-bit. Accumulator contents and the contents of a sixteen-bit base register, which may be either the Data Pointer or the PC. In the latter case, the PC is incremented to the address of the following instruction before being added with the Accumulator; otherwise the base register is not altered. Sixteen-bit addition is performed so a carry-out from the low-order eight bits may propagate through higher-order bits. No flags are affected.

Example: A value between 0 and 3 is in the Accumulator. The following instructions will translate the value in the Accumulator to one of four values defimed by the DB (define byte) directive.

```
REL-PC:  INC    A
         MOVC   A, @A+PC
         RET
         DB     66H
         DB     77H
         DB     88H
         DB     99H
```

If the subroutine is called with the Accumulator equal to 01H, it will return with 77H in the Accumulator. The INC A before the MOVC instruction is needed to “get around” the RET instruction above the table. If several bytes of code separated the MOVC from the table, the corresponding number would be added to the Accumulator instead.

MOVC A,@A+DPTR

Bytes: 1

Cycles: 2

Encoding:

1 0 0 1	0 0 1 1

Operation: MOVC
(A) ← ((A)+(DPTR))

STC MCU Limited.

MOVC A,@A+PC

Bytes: 1

Cycles: 2

Encoding:

1 0 0 0	0 0 1 1

Operation: MOVC
(PC) ← (PC)+1
(A) ← ((A)+(PC))

MOVX <dest-byte> , <src-byte>

Function: Move External

Description: The MOVX instructions transfer data between the Accumulator and a byte of external data memory, hence the "X" appended to MOV. There are two types of instructions, differing in whether they provide an eight-bit or sixteen-bit indirect address to the external data RAM.

In the first type, the contents of R0 or R1 in the current register bank provide an eight-bit address multiplexed with data on P0. Eight bits are sufficient for external I/O expansion decoding or for a relatively small RAM array. For somewhat larger arrays, any output port pins can be used to output higher-order address bits. These pins would be controlled by an output instruction preceding the MOVX.

In the second type of MOVX instruction, the Data Pointer generates a sixteen-bit address. P2 outputs the high-order eight address bits (the contents of DPH) while P0 multiplexes the low-order eight bits (DPL) with data. The P2 Special Function Register retains its previous contents while the P2 output buffers are emitting the contents of DPH. This form is faster and more efficient when accessing very large data arrays (up to 64K bytes), since no additional instructions are needed to set up the output ports.

It is possible in some situations to mix the two MOVX types. A large RAM array with its high-order address lines driven by P2 can be addressed via the Data Pointer, or with code to output high-order address bits to P2 followed by a MOVX instruction using R0 or R1.

Example: An external 256 byte RAM using multiplexed address/data lines (e.g., an Intel 8155 RAM/ I/O/Timer) is connected to the 8051 Port 0. Port 3 provides control lines for the external RAM. Ports 1 and 2 are used for normal I/O. Registers 0 and 1 contain 12H and 34H. Location 34H of the external RAM holds the value 56H. The instruction sequence,

```
MOVX    A, @R1
MOVX    @R0, A
```

copies the value 56H into both the Accumulator and external RAM location 12H.

MOVX A,@Ri

Bytes: 1

Cycles: 2

Encoding:

1 1 1 0	0 0 1 i

Operation: MOVX
(A) ← ((Ri))

STC MCU Limited

MOVX A,@DPTR

Bytes: 1

Cycles: 2

Encoding:

1 1 1 0	0 0 0 0

Operation: MOVX
(A) ← ((DPTR))

MOVX @Ri, A

Bytes: 1

Cycles: 2

Encoding:

1 1 1 1	0 0 1 i

Operation: MOVX
((Ri))← (A)

MOVX @DPTR, A

Bytes: 1

Cycles: 2

Encoding:

1 1 1 1	0 0 0 0

Operation: MOVX
(DPTR)←(A)

MUL AB

Function: Multiply

Description: MUL AB multiplies the unsigned eight-bit integers in the Accumulator and register B. The low-order byte of the sixteen-bit product is left in the Accumulator, and the high-order byte in B. If the product is greater than 255 (0FFH) the overflow flag is set; otherwise it is cleared. The carry flag is always cleared

Example: Originally the Accumulator holds the value 80 (50H). Register B holds the value 160 (0A0H). The instruction,

MUL AB

will give the product 12,800 (3200H), so B is changed to 32H (00110010B) and the Accumulator is cleared. The overflow flag is set, carry is cleared.

Bytes: 1

Cycles: 4

Encoding:

1 0 1 0	0 1 0 0

Operation: MUL
$(A)_{7\text{-}0}$ ← (A)×(B)
$(B)_{15\text{-}8}$

STC MCU Limited.

NOP

Function: No Operation

Description: Execution continues at the following instruction. Other than the PC, no registers or flags are affected.

Example: It is desired to produce a low-going output pulse on bit 7 of Port 2 lasting exactly 5 cycles. A simple SETB/CLR sequence would generate a one-cycle pulse, so four additional cycles must be inserted. This may be done (assuming no interrupts are enabled) with the instruction sequence.

```
CLR     P2.7
NOP
NOP
NOP
NOP
SETB    P2.7
```

Bytes: 1

Cycles: 1

Encoding:

0 0 0 0	0 0 0 0

Operation: NOP
(PC) ← (PC)+1

ORL <dest-byte> , <src-byte>

Function: Logical-OR for byte variables

Description: ORL performs the bitwise logical-OR operation between the indicated variables, storing the results in the destination byte. No flags are affected.

The two operands allow six addressing mode combinations. When the destination is the Accumulator, the source can use register, direct, register-indirect, or immediate addressing; when the destination is a direct address, the source can be the Accumulator or immediate data.

Note: When this instruction is used to modify an output port, the value used as the original port data will be read from the output data latch, not the input pins.

Example: If the Accumulator holds 0C3H (11000011B) and R0 holds 55H (01010101B) then the instruction,

```
ORL     A, R0
```

will leave the Accumulator holding the value 0D7H (11010111B).
When the destination is a directly addressed byte, the instruction can set combinations of bits in any RAM location or hardware register. The pattern of bits to be set is determined by a mask byte, which may be either a constant data value in the instruction or a variable computed in the Accumulator at run-time.The instruction,

```
ORL     P1, #00110010B
```

will set bits 5,4, and 1of output Port 1.

STC MCU Limited.

ORL A,Rn

Bytes: 1

Cycles: 1

Encoding:

0	1	0	0	1	r	r	r

Operation: ORL
(A) ← **(A)**∨(Rn)

ORL A,direct

Bytes: 2

Cycles: 1

Encoding:

0	1	0	0	0	1	0	1	direct address

Operation: ORL
(A)← **(A)**∨(direct)

ORL A,@Ri

Bytes: 1

Cycles: 1

Encoding:

0	1	0	0	0	1	1	i

Operation: ORL
(A)← **(A)**∨((Ri))

ORL A,#data

Bytes: 2

Cycles: 1

Encoding:

0	1	0	0	0	1	0	0	immediate data

Operation: ORL
(A)← **(A)**∨ #data

ORL direct, A

Bytes: 2

Cycles: 1

Encoding:

0	1	0	0	0	0	1	0	direct address

Operation: ORL
(direct)← **(direct)**∨(A)

ORL direct, #data

Bytes: 3

Cycles: 2

Encoding:

0	1	0	0	0	0	1	1	direct address	immediate data

Operation: ORL
(direct) ← **(direct)**∨#data

STC MCU Limited.

ORL C, <src-bit>

Function: Logical-OR for bit variables

Description: Set the carry flag if the Boolean value is a logical 1; leave the carry in its current state otherwise. A slash (" / ") preceding the operand in the assembly language indicates that the logical complement of the addressed bit is used as the source value, but the source bit itself is not affected. No other flags are affected.

Example: Set the carry flag if and only if P1.0 = 1, ACC. 7 = 1, or OV = 0:

```
MOV     C, P1.0         ;LOAD CARRY WITH INPUT PIN P1.0
ORL     C, ACC.7        ;OR CARRY WITH THE ACC.BIT 7
ORL     C, /OV          ;OR CARRY WITH THE INVERSE OF OV
```

ORL C, bit

Bytes: 2

Cycles: 2

Encoding:

0 1 1 1	0 0 1 0	bit address

Operation: ORL

(C) ← **(C)**∨(bit)

ORL C, /bit

Bytes: 2

Cycles: 2

Encoding:

1 0 1 0	0 0 0 0	bit address

Operation: ORL

(C) ← **(C)**∨$\overline{\text{(bit)}}$

STC MCU Limited.

POP direct

Function: Pop from stack

Description: The contents of the internal RAM location addressed by the Stack Pointer is read, and the Stack Pointer is decremented by one. The value read is then transferred to the directly addressed byte indicated. No flags are affected.

Example: The Stack Pointer originally contains the value 32H, and internal RAM locations 30H through 32H contain the values 20H, 23H, and 01H, respectively. The instruction sequence,

```
POP     DPH
POP     DPL
```

will leave the Stack Pointer equal to the value 30H and the Data Pointer set to 0123H. At this point the instruction,

```
POP     SP
```

will leave the Stack Pointer set to 20H. Note that in this special case the Stack Pointer was decremented to 2FH before being loaded with the value popped (20H).

Bytes: 2

Cycles: 2

Encoding:

1 1 0 1	0 0 0 0	direct address

Operation: POP

(direct) ← **((SP))**

(SP) ← **(SP) - 1**

PUSH direct

Function: Push onto stack

Description: The Stack Pointer is incremented by one. The contents of the indicated variableis then copied into the internal RAM location addressed by the Stack Pointer. Otherwise no flags are affected.

Example: On entering interrupt routine the Stack Pointer contains 09H. The Data Pointer holds the value 0123H. The instruction sequence,

```
PUSH    DPL
PUSH    DPH
```

will leave the Stack Pointer set to 0BH and store 23H and 01H in internal RAM locations 0AH and 0BH, respectively.

Bytes: 2

Cycles: 2

Encoding:

1 1 0 0	0 0 0 0	direct address

Operation: PUSH
(SP) ← **(SP) + 1**
((SP)) ← **(direct)**

RET

Function: Return from subroutine

Description: RET pops the high-and low-order bytes of the PC successively from the stack, decrementing the Stack Pointer by two. Program execution continues at the resulting address, generally the instruction immediately following an ACALL or LCALL. No flags are affected.

Example: The Stack Pointer originally contains the value 0BH. Internal RAM locations 0AH and 0BH contain the values 23H and 01H, respectively. The instruction,

```
RET
```

will leave the Stack Pointer equal to the value 09H. Program execution will continue at location 0123H.

Bytes: 1

Cycles: 2

Encoding:

0 0 1 0	0 0 1 0

Operation: RET
(PC_{15-8}) ← **((SP))**
(SP) ← **(SP) -1**
(PC_{7-0}) ← **((SP))**
(SP) ← **(SP) -1**

STC MCU Limited.

RETI

Function: Return from interrupt

Description: RETI pops the high- and low-order bytes of the PC successively from the stack, and restores the interrupt logic to accept additional interrupts at the same priority level as the one just processed. The Stack Pointer is left decremented by two. No other registers are affected; the PSW is not automatically restored to its pre-interrupt status. Program execution continues at the resulting address, which is generally the instruction immediately after the point at which the interrupt request was detected. If a lower- or same-level interrupt had been pending when the RETI instruction is executed, that one instruction will be executed before the pending interrupt is processed.

Example: The Stack Pointer originally contains the value 0BH. An interrupt was detected during the instruction ending at location 0122H. Internal RAM locations 0AH and 0BH contain the values 23H and 01H, respectively. The instruction,

RETI

will leave the Stack Pointer equal to 09H and return program execution to location 0123H.

Bytes: 1

Cycles: 2

Encoding:

0	0	1	1	0	0	1	0

Operation: RETI

$(PC_{15-8}) \leftarrow ((SP))$

$(SP) \leftarrow (SP) - 1$

$(PC_{7-0}) \leftarrow ((SP))$

$(SP) \leftarrow (SP) - 1$

STC MCU Limited.

RL A

Function: Rotate Accumulator Left

Description: The eight bits in the Accumulator are rotated one bit to the left. Bit 7 is rotated into the bit 0 position. No flags are affected.

Example: The Accumulator holds the value 0C5H (11000101B). The instruction,

RL A

leaves the Accumulator holding the value 8BH (10001011B) with the carry unaffected.

Bytes: 1

Cycles: 1

Encoding:

0	0	1	0	0	0	1	1

Operation: RL

$(An+1) \leftarrow (An)$ n = 0-6

$(A0) \leftarrow (A7)$

RLC A

Function: Rotate Accumulator Left through the Carry flag

Description: The eight bits in the Accumulator and the carry flag are together rotated one bit to the left. Bit 7 moves into the carry flag; the original state of the carry flag moves into the bit 0 position. No other flags are affected.

Example: The Accumulator holds the value 0C5H (11000101B), and the carry is zero. The instruction,
RLC A
leaves the Accumulator holding the value 8BH (10001011B) with the carry set.

Bytes: 1

Cycles: 1

Encoding:

0	0	1	1	0	0	1	1

Operation: RLC
(An+1) ← (An) n = 0-6
(A0) ← (C)
(C) ← (A7)

RR A

Function: Rotate Accumulator Right

Description: The eight bits in the Accumulator are rotated one bit to the right. Bit 0 is rotated into the bit 7 position. No flags are affected.

Example: The Accumulator holds the value 0C5H (11000101B). The instruction,
RR A
leaves the Accumulator holding the value 0E2H (11100010B) with the carry unaffected.

Bytes: 1

Cycles: 1

Encoding:

0	0	0	0	0	0	1	1

Operation: RR
(An) ← (An+1) n = 0 - 6
(A7) ← (A0)

RRC A

Function: Rotate Accumulator Right through the Carry flag

Description: The eight bits in the Accumulator and the carry flag are together rotated one bit to the right. Bit 0 moves into the carry flag; the original value of the carry flag moves into the bit 7 position.No other flags are affected.

Example: The Accumulator holds the value 0C5H (11000101B), and the carry is zero. The instruction,
RRC A
leaves the Accumulator holding the value 62H (01100010B) with the carry set.

Bytes: 1

Cycles: 1

Encoding:

0	0	0	1	0	0	1	1

Operation: RRC
(An+1) ← (An) n = 0-6
(A7) ← (C)
(C) ← (A0)

STC MCU Limited.

SETB <bit>

Function: Set bit

Description: SETB sets the indicated bit to one. SETB can operate on the carry flag or any directly addressable bit. No other flags are affected

Example: The carry flag is cleared. Output Port 1 has been written with the value 34H (00110100B). The instructions,
SETB C
SETB P1.0
will leave the carry flag set to 1 and change the data output on Port 1 to 35H (00110101B).

SETB C

Bytes: 1

Cycles: 1

Encoding:

1 1 0 1	0 0 1 1

Operation: SETB
(C) ← **1**

SETB bit

Bytes: 2

Cycles: 1

Encoding:

1 1 0 1	0 0 1 0	bit address

Operation: SETB
(bit) ← **1**

STC MCU Limited.

SJMP rel

Function: Short Jump

Description: Program control branches unconditionally to the address indicated. The branch destination is computed by adding the signed displacement in the second instruction byte to the PC, after incrementing the PC twice. Therefore, the range of destinations allowed is from 128bytes preceding this instruction to 127 bytes following it.

Example: The label “RELADR” is assigned to an instruction at program memory location 0123H. The instruction,
SJMP RELADR
will assemble into location 0100H. After the instruction is executed, the PC will contain the value 0123H.
(*Note:* Under the above conditions the instruction following SJMP will be at 102H.Therefore, the displacement byte of the instruction will be the relative offset (0123H - 0102H) = 21H. Put another way, an SJMP with a displacement of 0FEH would be an one-instruction infinite loop).

Bytes: 2

Cycles: 2

Encoding:

1 0 0 0	0 0 0 0	rel. address

Operation: SJMP
(PC) ← **(PC)+2**
(PC) ← **(PC)+rel**

SUBB A, <src-byte>

Function: Subtract with borrow

Description: SUBB subtracts the indicated variable and the carry flag together from the Accumulator, leaving the result in the Accumulator. SUBB sets the carry (borrow)flag if a borrow is needed for bit 7, and clears C otherwise.(If C was set before executing a SUBB instruction, this indicates that a borrow was needed for the previous step in a multiple precision subtraction, so the carry is subtracted from the Accumulator along with the source operand).AC is set if a borrow is needed for bit 3, and cleared otherwise. OV is set if a borrow is needed into bit 6, but not into bit 7, or into bit 7, but not bit 6.

When subtracting signed integers OV indicates a negative number produced when a negative value is subtracted from a positive value, or a positive result when a positive number is subtracted from a negative number.

The source operand allows four addressing modes: register, direct, register-indirect, or immediate.

Example: The Accumulator holds 0C9H (11001001B), register 2 holds 54H (01010100B), and the carry flag is set. The instruction,

SUBB A, R2

will leave the value 74H (01110100B) in the accumulator, with the carry flag and AC cleared but OV set.

Notice that 0C9H minus 54H is 75H. The difference between this and the above result is due to the carry (borrow) flag being set before the operation. If the state of the carry is not known before starting a single or multiple-precision subtraction, it should be explicitly cleared by a CLR C instruction.

STC MCU Limited.

SUBB A, Rn

Bytes: 1

Cycles: 1

Encoding:

1 0 0 1	1 r r r

Operation: SUBB
(A) ← (A) - (C) - (Rn)

SUBB A, direct

Bytes: 2

Cycles: 1

Encoding:

1 0 0 1	0 1 0 1	direct address

Operation: SUBB
(A) ← (A) - (C) - (direct)

SUBB A, @Ri

Bytes: 1

Cycles: 1

Encoding:

1 0 0 1	0 1 1 i

Operation: SUBB
(A) ← (A) - (C) - ((Ri))

SUBB A, #data

Bytes: 2

Cycles: 1

Encoding:

1 0 0 1	0 1 0 0	immediate data

Operation: SUBB

(A) ← (A) - (C) - #data

SWAP A

Function: Swap nibbles within the Accumulator

Description: SWAP A interchanges the low- and high-order nibbles (four-bit fields) of the Accumulator (bits 3-0 and bits 7-4). The operation can also be thought of as a four-bit rotate instruction. No flags are affected.

Example: The Accumulator holds the value 0C5H (11000101B). The instruction,

SWAP A

leaves the Accumulator holding the value 5CH (01011100B).

Bytes: 1

Cycles: 1

Encoding:

1 1 0 0	0 1 0 0

Operation: SWAP

$(A_{3-0}) \rightleftarrows (A_{7-4})$

XCH A, <byte>

Function: Exchange Accumulator with byte variable

Description: XCH loads the Accumulator with the contents of the indicated variable, at the same time writing the original Accumulator contents to the indicated variable. The source/destination operand can use register, direct, or register-indirect addressing.

Example: R0 contains the address 20H. The Accumulator holds the value 3FH (00111111B). Internal RAM location 20H holds the value 75H (01110101B). The instruction,

XCH A, @R0

will leave RAM location 20H holding the values 3FH (00111111B) and 75H (01110101B) in the accumulator.

XCH A, Rn

Bytes: 1

Cycles: 1

Encoding:

1 1 0 0	1 r r r

Operation: XCH

(A) $\rightleftarrows$ (Rn)

XCH A, direct

Bytes: 2

Cycles: 1

Encoding:

1 1 0 0	0 1 0 1	direct address

Operation: XCH

(A) $\rightleftarrows$ (direct)

STC MCU Limited.

XCH A, @Ri

Bytes: 1

Cycles: 1

Encoding:

1 1 0 0	0 1 1 i

Operation: XCH

(A) $\rightleftarrows$ ((Ri))

XCHD A, @Ri

Function: Exchange Digit

Description: XCHD exchanges the low-order nibble of the Accumulator (bits 3-0), generally representing a hexadecimal or BCD digit, with that of the internal RAM location indirectly addressed by the specified register. The high-order nibbles (bits 7-4) of each register are not affected. No flags are affected.

Example: R0 contains the address 20H. The Accumulator holds the value 36H (00110110B). Internal RAM location 20H holds the value 75H (01110101B). The instruction,

XCHD A, @R0

will leave RAM location 20H holding the value 76H (01110110B) and 35H (00110101B) in the accumulator.

Bytes: 1

Cycles: 1

Encoding:

1 1 0 1	0 1 1 i

Operation: XCHD

(A_{3-0}) $\rightleftarrows$ (Ri_{3-0})

XRL <dest-byte>, <src-byte>

Function: Logical Exclusive-OR for byte variables

Description: XRL performs the bitwise logical Exclusive-OR operation between the indicated variables, storing the results in the destination. No flags are affected.

The two operands allow six addressing mode combinations.When the destination is the Accumulator, the source can use register, direct, register-indirect, or immediate addressing; when the destination is a direct address,the source can be the Accumulator or immediate data.

(*Note*: When this instruction is used to modify an output port, the value used as the original port data will be read from the output data latch, not the input pins.)

Example: If the Accumulator holds 0C3H (11000011B) and register 0 holds 0AAH (10101010B) then the instruction,

XRL A, R0

will leave the Accumulator holding the vatue 69H (01101001B).

When the destination is a directly addressed byte, this instruction can complement combinnation of bits in any RAM location or hardware register. The pattern of bits to be complemented is then determined by a mask byte, either a constant contained in the instruction or a variable computed in the Accumulator at run-time. The instruction,

XRL P1, #00110001B

will complement bits 5,4 and 0 of outpue Port 1.

STC MCU Limited

XRL A, Rn

Bytes: 1

Cycles: 1

Encoding:

0 1 1 0	1 r r r

Operation: XRL
(A) ← (A) ⅄ (Rn)

XRL A, direct

Bytes: 2

Cycles: 1

Encoding:

0 1 1 0	0 1 0 1	direct address

Operation: XRL
(A) ← (A) ⅄ (direct)

XRL A, @Ri

Bytes: 1

Cycles: 1

Encoding:

0 1 1 0	0 1 1 i

Operation: XRL
(A) ← (A) ⅄ ((Ri))

XRL A, #data

Bytes: 2

Cycles: 1

Encoding:

0 1 1 0	0 1 0 0	immediate data

Operation: XRL
(A) ← (A) ⅄ #data

XRL direct, A

Bytes: 2

Cycles: 1

Encoding:

0 1 1 0	0 0 1 0	direct address

Operation: XRL
(direct) ← (direct) ⅄ (A)

XRL direct, #data

Bytes: 3

Cycles: 2

Encoding:

0 1 1 0	0 0 1 1	direct address	immediate data

Operation: XRL
(direct) ← (direct) ⅄ # data

STC MCU Limited.

Chapter 6 Interrupt System

Microcontrollers are normally found in situations wher the flow of a program will be subject to external events. These will come from hardware either outside the microcontroller or within the chip itself. Therefore an important feature of these devices is their ability to respond to signals known as interrupts which are received by the microcontroller.

STC15 series MCU support maximum 19 interrupt sources. The 19 interrupt sources are external interrupt 0 (INT0), Timer 0 interrrupt, external interrupt 1(INT1), Timer 1 interrrupt, serial port 1 (UART1) interrupt, ADC interrupt, low voltage detection (LVD) interrupt, CCP/PCA/PWM interrupt, serial port 2 (UART2) interrupt, SPI interrupt, external interrupt 2($\overline{\text{INT2}}$), external interrupt 3($\overline{\text{INT3}}$), Timer 2 interrrupt, external interrupt 4 ($\overline{\text{INT4}}$), serial port 3(UART3) interrupt, serial port 4(UART4) interrupt, Timer 3 interrrupt, Timer 4 interrrupt and comparator interrupt . Except external interrupt 2 ($\overline{\text{INT2}}$), external interrupt 3 ($\overline{\text{INT3}}$), Timer 2 interrrupt, external interrupt 4 ($\overline{\text{INT4}}$), serial port 3(UART3) interrupt, serial port 4(UART4) interrupt, Timer 3 interrrupt, Timer 4 interrrupt and comparator interrupt are fixed with the lowest priority, the other interrupts all have two priority levels.

STC MCU Limited.

Each interrupt source has one or more associated interrupt-request flag(s) in SFRs. Associating with each interrupt vector, the interrupt sources can be individually enabled or disabled by setting or clearing a bit (interrupt enalbe control bit) in the SFRs IE, IE2, INT_CLKO(AUXR2) and CCON . However, interrupts must first be globally enabled by setting the EA bit (IE.7) to logic 1 before the individual interrupt enables are recognized. Setting the EA bit to logic 0 disables all interrupt sources regardless of the individual interrupt-enable settings.

If interrupts are enabled for the source, an interrupt request is generated when the interrupt-request flag is set. As soon as execution of the current instruction is complete, the CPU generates an LCALL to a predetermined address to begin execution of an interrupt service routine (ISR). Each ISR must end with an RETI instruction, which returns program execution to the next instruction that would have been executed if the interrupt request had not occurred. If interrupts are not enabled, the interrupt-pending flag is ignored by the hardware and program execution continues as normal. (The interrupt-pending flag is set to logic 1 regardless of the interrupt's enable/ disable state.)

Except external interrupt 2($\overline{\text{INT2}}$), external interrupt 3($\overline{\text{INT3}}$), Timer 2 interrrupt, external interrupt 4($\overline{\text{INT4}}$), serial port 3(UART3) interrupt, serial port 4(UART4) interrupt, Timer 3 interrrupt, Timer 4 interrrupt and comparator interrupt , each interrupt source has one corresponding bit to represent its priority, which is located in SFR named IP and IP2 register. Higher-priority interrupt will be not interrupted by lower-priority interrupt request. If two interrupt requests of different priority levels are received simultaneously, the request of higher priority is serviced. If interrupt requests of the same priority level are received simultaneously, an internal polling sequence determine which request is serviced. The following table shows the internal polling sequence in the same priority level and the interrupt vector address.

6.1 Interrupt Request Sources of STC15 series MCU

the interrupt request sources of STC15 series MCU are shown in following table.

MCU Type / Interrupt Source Type	STC15F101W series	STC1W104 series	STC15F408AD series	STC15W201S series	STC15W401AS series	STC15W404S series	STC15W1K16S series	STC15F2K60S2 series	STC15W4K32S4 series
External Interrupt 0 (INT0)	√	√	√	√	√	√	√	√	√
Timer 0 Interrupt	√	√	√	√	√	√	√	√	√
External Interrupt 1 (INT1)	√	√	√	√	√	√	√	√	√
Timer 1 Interrupt						√	√	√	√
UART1 Interrupt			√	√	√	√	√	√	√
ADC Interrupt			√		√			√	√
Low Voltage Detection (LVD) Interrupt	√	√	√	√	√	√	√	√	√
CCP/PWM/PCA Interrupt			√		√			√	√
UART2 Interrupt								√	√
SPI Interrupt			√		√	√	√	√	√
External Interrupt 2 ($\overline{INT2}$)	√	√	√	√	√	√	√	√	√
External Interrupt 3 ($\overline{INT3}$)	√	√	√	√	√	√	√	√	√
Timer 2 Interrupt	√	√	√	√	√	√	√	√	√
External Interrupt 4 ($\overline{INT4}$)	√	√	√	√	√	√	√	√	√
UART3 Interrupt									√
UART4 Interrupt									√
Timer 3 Interrupt									√
Timer 4 Interrupt									√
Comparator Interrupt				√	√	√	√		√

√ means the corresponding series MCU have the corresponding interrupt request source.

STC MCU Limited.

6.1.1 Interrupt Request Sources of STC15F101W series

STC15F101W series MCU support 8 interrupt sources. The 8 interrupt sources are external interrupt 0 (INT0), Timer 0 interrrupt, external interrupt 1(INT1), low voltage detection (LVD) interrupt, external interrupt 2 ($\overline{INT2}$), external interrupt 3($\overline{INT3}$), Timer 2 interrrupt and external interrupt 4 ($\overline{INT4}$). Except external interrupt 2 ($\overline{INT2}$) , external interrupt 3 ($\overline{INT3}$), Timer 2 interrrupt and external interrupt 4 ($\overline{INT4}$) are fixed with the lowest priority, the other interrupts all have two priority levels.

6.1.2 Interrupt Request Sources of STC15W10x series

STC15W10x series MCU support 8 interrupt sources. The 8 interrupt sources are external interrupt 0 (INT0), Timer 0 interrrupt, external interrupt 1(INT1), low voltage detection (LVD) interrupt, external interrupt 2 ($\overline{INT2}$), external interrupt 3($\overline{INT3}$), Timer 2 interrrupt and external interrupt 4 ($\overline{INT4}$). Except external interrupt 2 ($\overline{INT2}$) , external interrupt 3 ($\overline{INT3}$), Timer 2 interrrupt and external interrupt 4 ($\overline{INT4}$) are fixed with the lowest priority, the other interrupts all have two priority levels.

6.1.3 Interrupt Request Sources of STC15W201S series

STC15W201S series MCU support 10 interrupt sources. The 10 interrupt sources are external interrupt 0 (INT0), Timer 0 interrrupt, external interrupt 1(INT1), seril port (UART) interrupt, low voltage detection (LVD) interrupt, external interrupt 2 (INT2), external interrupt 3(INT3), Timer 2 interrrupt, external interrupt 4 (INT4) and comparator interrupt. Except external interrupt 2 (INT2) , external interrupt 3 (INT3), Timer 2 interrrupt, external interrupt 4 (INT4) and comparator interrupt are fixed with the lowest priority, the other interrupts all have two priority levels.

6.1.4 Interrupt Request Sources of STC15F408AD series

STC15F408AD series MCU support 12 interrupt sources. The 12 interrupt sources are external interrupt 0 (INT0), Timer 0 interrrupt, external interrupt 1(INT1), seril port (UART) interrupt, ADC interrupt, low voltage detection (LVD) interrupt, CCP/PCA/PWM interrupt, SPI interrupt, external interrupt 2 (INT2), external interrupt 3(INT3), Timer 2 interrrupt and external interrupt 4 (INT4). Except external interrupt 2 (INT2) , external interrupt 3 (INT3) , Timer 2 interrrupt and external interrupt 4 (INT4) are fixed with the lowest priority, the other interrupts all have two priority levels.

6.1.5 Interrupt Request Sources of STC15W401AS series

STC15W401AS series MCU support 13 interrupt sources. The 13 interrupt sources are external interrupt 0 (INT0), Timer 0 interrrupt, external interrupt 1(INT1), seril port (UART) interrupt, ADC interrupt, low voltage detection (LVD) interrupt, CCP/PCA/PWM interrupt, SPI interrupt, external interrupt 2 (INT2), external interrupt 3(INT3), Timer 2 interrrupt, external interrupt 4 (INT4) and comparator interrupt. Except external interrupt 2 (INT2) , external interrupt 3 (INT3) , Timer 2 interrrupt, external interrupt 4 (INT4) and comparator interrupt are fixed with the lowest priority, the other interrupts all have two priority levels.

6.1.6 Interrupt Request Sources of STC15W404S series

STC15W404S series MCU support 12 interrupt sources. The 12 interrupt sources are external interrupt 0 (INT0), Timer 0 interrrupt, external interrupt 1(INT1), Timer 1 interrrupt, seril port (UART) interrupt, low voltage detection (LVD) interrupt, SPI interrupt, external interrupt 2 (INT2), external interrupt 3 (INT3), Timer 2 interrrupt, external interrupt 4 (INT4) and comparator interrupt. Except external interrupt 2 (INT2) , external interrupt 3 (INT3), Timer 2 interrrupt, external interrupt 4 (INT4) and comparator interrupt are fixed with the lowest priority, the other interrupts all have two priority levels.

6.1.6 Interrupt Request Sources of STC15W1K16S series

STC15W1K16S series MCU support 12 interrupt sources. The 12 interrupt sources are external interrupt 0 (INT0), Timer 0 interrrupt, external interrupt 1(INT1), Timer 1 interrrupt, seril port (UART) interrupt, low voltage detection (LVD) interrupt, SPI interrupt, external interrupt 2 (INT2), external interrupt 3 (INT3), Timer 2 interrrupt, external interrupt 4 (INT4) and comparator interrupt. Except external interrupt 2 (INT2) , external interrupt 3 (INT3), Timer 2 interrrupt, external interrupt 4 (INT4) and comparator interrupt are fixed with the lowest priority, the other interrupts all have two priority levels.

STC MCU Limited

6.1.7 Interrupt Request Sources of STC15F2K60S2 series

STC15F2K60S2 series MCU support maximum 14 interrupt sources. The 14 interrupt sources are external interrupt 0 (INT0), Timer 0 interrrupt, external interrupt 1(INT1), Timer 1 interrrupt, serial port 1 (UART1) interrupt, ADC interrupt, low voltage detection (LVD) interrupt, CCP/PCA/PWM interrupt, serial port 2 (UART2) interrupt, SPI interrupt, external interrupt 2($\overline{\text{INT2}}$), external interrupt 3($\overline{\text{INT3}}$), Timer 2 interrrupt and external interrupt 4 ($\overline{\text{INT4}}$). Except external interrupt 2 ($\overline{\text{INT2}}$), external interrupt 3 ($\overline{\text{INT3}}$), Timer 2 interrrupt and external interrupt 4 ($\overline{\text{INT4}}$) are fixed with the lowest priority, the other interrupts all have two priority levels.

6.1.8 Interrupt Request Sources of STC15W4K32S4 series

STC15W4K32S4 series MCU support maximum 19 interrupt sources. The 18 interrupt sources are external interrupt 0 (INT0), Timer 0 interrrupt, external interrupt 1(INT1), Timer 1 interrrupt, serial port 1 (UART1) interrupt, ADC interrupt, low voltage detection (LVD) interrupt, CCP/PCA/PWM interrupt, serial port 2 (UART2) interrupt, SPI interrupt, external interrupt 2($\overline{\text{INT2}}$), external interrupt 3($\overline{\text{INT3}}$), Timer 2 interrrupt, external interrupt 4 ($\overline{\text{INT4}}$), serial port 3(UART3) interrupt, serial port 4(UART4) interrupt, Timer 3 interrrupt, Timer 4 interrrupt and comparator interrupt. Except external interrupt 2 ($\overline{\text{INT2}}$), external interrupt 3 ($\overline{\text{INT3}}$), Timer 2 interrrupt, external interrupt 4 ($\overline{\text{INT4}}$), serial port 3(UART3) interrupt, serial port 4(UART4) interrupt, Timer 3 interrrupt, Timer 4 interrrupt and comparator interrupt are fixed with the lowest priority, the other interrupts all have two priority levels.

STC MCU Limited.

6.2 Interrupt Structure

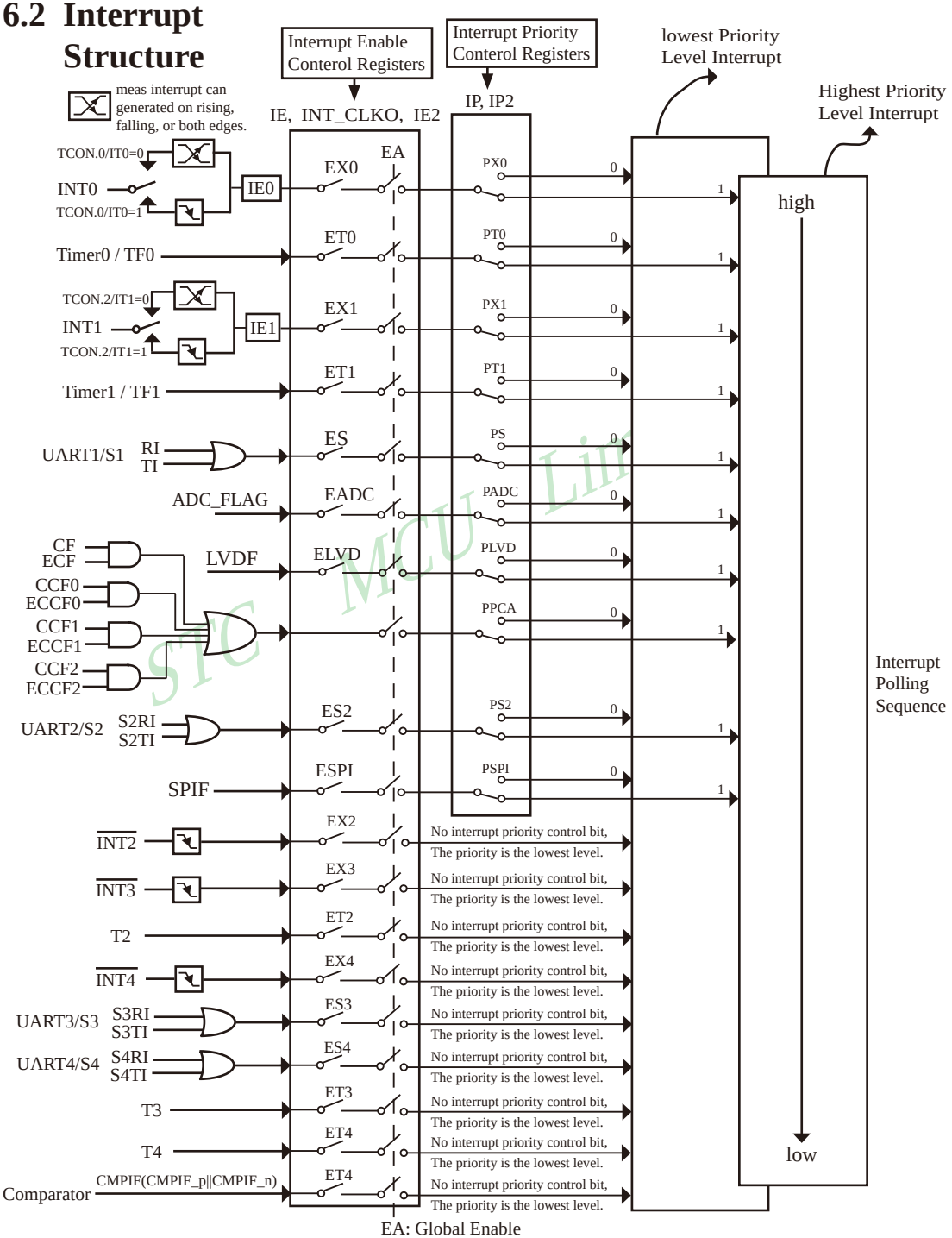

STC MCU Lim

The External Interrupts INT0 and INT1 can be generated on rising, falling or both edges, depending on bits IT0/TCON.0 and IT1/TCON.2 in Register TCON. The flags that actually request these interrupts are bits IE0/ TCON.1 and IE1/TCON.3 in register TCON, which would be automatically cleared when the external interrupts service routine is vectored to. The External Interrupts INT0 and INT1 can be generated on both rising and falling edge if the bits ITx = 0 (x = 0,1). The External Interrupts INT0 and INT1 only can be generated on falling edge if the bits ITx = 1 (x = 0,1). External interrupts also can be used to wake up MCU from Stop/Power-Down mode.

The request flags of Timer 0 and Timer1 Interrupts are bits TF0 and TF1, which are set by a rollover in their respective Timer/Counter registers in most cases. When a timer interrupt are generated, the responding flags are cleared by the on-chip hardware when the service routine is vectored to.

The External Interrupts $\overline{\text{INT2}}$, $\overline{\text{INT3}}$ and $\overline{\text{INT4}}$ only can be falling-activated. The request flags of external interrupt 2~4 are invisible to users. When an external interrupt is generated, the interrupt request flag would be cleared by the hardware if the service routine is vectored to or EXn = 0 (n = 2,3,4).

The request flag of Timer 2 interrupt is invisible to users. When Timer 2 interrupt is generated, the interrupt request flag would be cleared by the hardware if the service routine is vectored to or ET2 = 0.

The request flags of Timer 3 interrupt and Timer 4 interrupt are invisible to users. When Timer 3 or Timer 4 interrupt is generated, the responding request flag would be cleared by the hardware if the service routine is vectored to or ET3 / ET4 = 0.

The Serial Port Interrupt is generated by the logical OR of RI and TI. Neither of these flags is cleared by hardware when the service routine is vectored to. In fact, the service routine will normally have to determine whether it was RI and TI that generated the interrupt, and the bit will have to be cleared by software.

The secondary serial port interrupt is generated by the logical OR of S2RI and S2TI. Neither of these flags is cleared by hardware when the service routine is vectored to. The service routine should poll S2RI and S2TI to determine which one to request service and it will be cleared by software.

The UART3 interrupt is generated by the logical OR of S3RI and S3TI. Neither of these flags is cleared by hardware when the service routine is vectored to. The service routine should poll S3RI and S3TI to determine which one to request service and it will be cleared by software.

The UART4 interrupt is generated by the logical OR of S4RI and S4TI. Neither of these flags is cleared by hardware when the service routine is vectored to. The service routine should poll S4RI and S4TI to determine which one to request service and it will be cleared by software.

The ADC interrupt is generated by the flag – ADC_FLAG. It should be cleared by software.

The Low Voltage Detect interrupt is generated by the flag – LVDF(PCON.5) in PCON register. It should be cleared by software.

The CCP/PCA/PWM interrupt is generated by the logical OR of CF, CCF0 ~ CCF2. The service routine should poll CF and CCF0 ~ CCF2 to determine which one to request service and it will be cleared by software.

The SPI interrupt is generated by the flag SPIF. It can only be cleared by writing a “1” to SPIF bit in software.

All of the bits that generate interrupts can be set or cleared by software, with the same result as though it had been set or cleared by hardware. In other words, interrupts can be generated or pending interrupts can be canceled in software.

STC MCU Limited.

Interrupt Trigger Table

Interrupt Source	Trigger Behaviour
INT0 (External interrupt 0)	(IT0 = 1): falling edge； (IT0 = 0): both rising and falling edges
Timer 0	Timer 0 overflow
INT1 (External interrupt 1)	(IT1 = 1): falling edge； (IT1 = 0): both rising and falling edges
Timer1	Timer 1 overflow
UART1	finish sending or receiving of UART1
ADC	finishi A/D converting
LVD	the operation voltage drops to less than LVD voltage.
UART2	finish sending or receiving of UART2
SPI	SPI dat transmission is completed
$\overline{\text{INT2}}$ (External interrupt 2)	falling edge
$\overline{\text{INT3}}$ (External interrupt 3)	falling edge
Timer2	Timer 2 overflow
$\overline{\text{INT4}}$ (External interupt 4)	falling edge
UART3	finish sending or receiving of UART3
UART4	finish sending or receiving of UART4
Timer3	Timer 3 overflow
Timer4	Timer 4 overflow
Comparator	The result after comparing by comparator have changed from low to high or from high to low

STC MCU Limited.

6.3 Interrupt Vector Address/Priority/Request Flag Table

Interrupt Sources, vector address, priority and polling sequence Table

Interrupt Sources	Interrupt Vector address	Priority within level	Interrupt Priority setting (IP, IP2)	Priority 0 (lowest)	Priority 1 (highest)	Interrupt Request		Interrupt Enable Control Bit
INT0 (External Interrupt 0)	0003H	0 (highest)	PX0	0	1	IE0		EX0/EA
Timer 0	000BH	1	PT0	0	1	TF0		ET0/EA
INT1 (External Interrupt 1)	0013H	2	PX1	0	1	IE1		EX1/EA
Timer1	001BH	3	PT1	0	1	TF1		ET1/EA
S1(UART1)	0023B	4	PS	0	1	RI+TI		ES/EA
ADC	002BH	5	PADC	0	1	ADC_FLAG		EADC/EA
LVD	0033H	6	PLVD	0	1	LVDF		ELVD/EA
CCP/PCA	003BH	7	PPCA	0	1	CF+CCF0+CCF1 +CCF2		(ECF+ECCF0+ECCF1 +ECCF2)/EA
S2(UART2)	0043H	8	PS2	0	1	S2RI+S2TI		ES2/EA
SPI	004BH	9	PSPI	0	1	SPIF		ESPI/EA
$\overline{\text{INT2}}$ (External Interrupt 2)	0053H	10	0	0				EX2/EA
$\overline{\text{INT3}}$ (External Interrupt 3)	005BH	11	0	0				EX3/EA
Timer 2	0063H	12	0	0				ET2/EA
-	006BH	13						
System Reserved	0073H	14						
System Reserved	007BH	15						
$\overline{\text{INT4}}$ (External Interrupt 4)	0083H	16	0	0				EX4/EA
S3(UART3)	008BH	17	0	0		S3RI+S3TI		ES3/EA
S4(UART4)	0093H	18	0	0		S4RI+S4TI		ES4/EA
Timer 3	009BH	19	0	0				ET3/EA
Timer 4	00A3H	20	0	0				ET4/EA
Comparator	00ABH	21(lowest)	0	0		CMPIF	CMPIF_p	PIE/EA (Postive-edge)
							CMPIF_n	NIE/EA (Negative-edge)

STC MCU Limited.

6.4 How to Declare Interrupt Function in Keil C

In C language program. the interrupt polling sequence number is equal to interrupt number, for example,

```
void    Int0_Routine(void)          interrupt  0;
void    Timer0_Rountine(void)       interrupt  1;
void    Int1_Routine(void)          interrupt  2;
void    Timer1_Rountine(void)       interrupt  3;
void    UART1_Routine(void)         interrupt  4;
void    ADC_Routine(void)           interrupt  5;
void    LVD_Routine(void)           interrupt  6;
void    PCA_Routine(void)           interrupt  7;
void    UART2_Routine(void)         interrupt  8;
void    SPI_Routine(void)           interrupt  9;
void    Int2_Routine(void)          interrupt  10;
void    Int3_Routine(void)          interrupt  11;
void    Timer2_Routine(void)        interrupt  12;
void    PWM_Routine(void)           interrupt  13;
void    Int4_Routine(void)          interrupt  16;
void    S3_Routine(void)            interrupt  17;
void    S4_Routine(void)            interrupt  18;
void    Timer3_Routine(void)        interrupt  19;
void    Timer4_Routine(void)        interrupt  20;
void    Comparator_Routine(void)    interrupt  21;
```

STC MCU Limited.

6.5 Interrupt Registers

Symbol	Description	Address	Bit Address and Symbol MSB LSB								Value after Power-on or Reset
IE	Interrupt Enable	A8H	EA	ELVD	EADC	ES	ET1	EX1	ET0	EX0	0000 0000B
IE2	Interrupt Enable 2	AFH	-	ET4	ET3	ES4	ES3	ET2	ESPI	ES2	x000 0000B
INT_CLKO AUXR2	External Interrupt enable and Clock Output register	8FH	-	EX4	EX3	EX2	-	T2CLKO	T1CLKO	T0CLKO	x000 x000B
IP	Interrupt Priority Low	B8H	PPCA	PLVD	PADC	PS	PT1	PX1	PT0	PX0	0000 0000B
IP2	2rd Interrupt Priority Low register	B5H	-	-	-	-	-	-	PSPI	PS2	xxxx xx00B
TCON	Timer Control register	88H	TF1	TR1	TF0	TR0	IE1	IT1	IE0	IT0	0000 0000B
SCON	Serial Control	98H	SM0/FE	SM1	SM2	REN	TB8	RB8	TI	RI	0000 0000B
S2CON	Serial 2/ UART2 Control	9AH	S2SM0	-	S2SM2	S2REN	S2TB8	S2RB8	S2TI	S2RI	0000 0000B
S3CON	UART3 Control Register	ACH	S3SM0	S3ST3	S3SM2	S3REN	S3TB8	S3RB8	S3TI	S3RI	0000,0000
S4CON	UART4 Control Register	84H	S4SM0	S4ST4	S4SM2	S4REN	S4TB8	S4RB8	S4TI	S4RI	0000,0000
T4T3M	T4 and T3 Control and Mode register	D1H	T4R	T4_C/$\overline{T}$	T4x12	T4CLKO	T3R	T3_C/$\overline{T}$	T3x12	T3CLKO	0000 0000B
PCON	Power Control register	87H	SMOD	SMOD0	LVDF	POF	GF1	GF0	PD	IDL	0011 0000B
ADC_CONTR	ADC control register	BCH	ADC_POWER	SPEED1	SPEED0	ADC_FLAG	ADC_START	CHS2	CHS1	CHIS0	0000 0000B
SPSTAT	SPI Status register	CDH	SPIF	WCOL	-	-	-	-	-	-	00xx xxxxB
CCON	PCA Control Register	D8H	CF	CR	-	-	-	CCF2	CCF1	CCF0	00xx x000B
CMOD	PCA Mode Register	D9H	CIDL	-	-	-	CPS2	CPS1	CPS0	ECF	0xxx 0000B
CCAPM0	PCA Module 0 Mode Register	DAH	-	ECOM0	CAPP0	CAPN0	MAT0	TOG0	PWM0	ECCF0	x000 0000B
CCAPM1	PCA Module 1 Mode Register	DBH	-	ECOM1	CAPP1	CAPN1	MAT1	TOG1	PWM1	ECCF1	x000 0000B
CCAPM2	PCA Module 2 Mode Register	DCH	-	ECOM2	CAPP2	CAPN2	MAT2	TOG2	PWM2	ECCF2	x000 0000B
AUXR	Auxiliary register	8EH	T0x12	T1x12	UART_M0x6	T2R	T2_C/$\overline{T}$	T2x12	EXTRAM	S1ST2	0000 0001B
CMPCR1	Compartor control Register 1	E6H	CMPEN	CMPIF	PIE	NIE	PIS	NIS	CMPOE	CMPRES	0000 0000B
PWMIF	PWM Interrupt Flag Register	DFH	PWMIF7	PWMIF6	PWMIF5	PWMIF4	PWMIF3	PWMIF2			0000 0000B

STC MCU Limited.

1. Interrupt Enable control Registers IE, IE2 and INT_CLKO (AUXR2)

IE: Interrupt Enable Rsgister (Bit-addressable)

SFR name	Address	bit	B7	B6	B5	B4	B3	B2	B1	B0
IE	A8H	name	EA	ELVD	EADC	ES	ET1	EX1	ET0	EX0

Enable Bit = 1 enables the interrupt .
Enable Bit = 0 disables it .

EA (IE.7): disables all interrupts.
If EA = 0, no interrupt would be acknowledged.
If EA = 1, each interrupt source would be individually enabled or disabled by setting or clearing its enable bit.

ELVD (IE.6): Low volatge detection interrupt enable bit.
If ELVD = 0, Low voltage detection interrupt would be diabled.
If ELVD = 1, Low voltage detection interrupt would be enabled.

EADC (IE.5): ADC interrupt enable bit.
If EADC = 0, ADC interrupt would be diabled.
If EADC = 1, ADC interrupt would be enabled.

ES (IE.4): Serial Port 1 (UART1) interrupt enable bit.
If ES = 0, UART1 interrupt would be diabled.
If ES = 1, UART1 interrupt would be enabled.

ET1 (IE.3): Timer 1 interrupt enable bit.
If ET1 = 0, Timer 1 interrupt would be diabled.
If ET1 = 1, Timer 1 interrupt would be enabled.

EX1 (IE.2): External interrupt 1 enable bit.
If EX1 = 0, external interrupt 1 would be diabled.
If EX1 = 1, external interrupt 1 would be enabled.

ET0 (IE.1): Timer 0 interrupt enable bit.
If ET0 = 0, Timer 0 interrupt would be diabled.
If ET0 = 1, Timer 0 interrupt would be enabled.

EX0 (IE.0): External interrupt 0 enable bit.
If EX0 = 0, external interrupt 0 would be diabled.
If EX0 = 1, external interrupt 0 would be enabled.

IE2: Interrupt Enable 2 Rsgister (Non bit-addressable)

SFR name	Address	bit	B7	B6	B5	B4	B3	B2	B1	B0
IE2	AFH	name	-	ET4	ET3	ES4	ES3	ET2	ESPI	ES2

ET4 (IE.6): Timer 4 interrupt enable bit.
If ET4 = 0, Timer 4 interrupt would be diabled.
If ET4 = 1, Timer 4 interrupt would be enabled.

ET3 (IE.5): Timer 3 interrupt enable bit.
If ET3 = 0, Timer 3 interrupt would be diabled.
If ET3 = 1, Timer 3 interrupt would be enabled.

STC MCU Limited.

ES4 (IE2.4): Serial Port 4 (UART4) interrupt enable bit.
If ES4 = 0, UART4 interrupt would be diabled.
If ES4 = 1, UART4 interrupt would be enabled.

ES3 (IE2.3): Serial Port 3 (UART3) interrupt enable bit.
If ES3 = 0, UART3 interrupt would be diabled.
If ES3 = 1, UART3 interrupt would be enabled.

ET2 (IE2.2) Timer 2 interrupt enable bit.
If ET2 = 0, Timer 2 interrupt would be diabled.
If ET2 = 1, Timer 2 interrupt would be enabled.

ESPI (IE2.1): SPI interrupt enalbe bit.
If ESPI = 0, SPI interrupt would be diabled.
If ESPI = 1, SPI interrupt would be enabled.

ES2 (IE2.0): Serial Port 2 (UART2) interrupt enable bit.
If ES2 = 0, UART2 interrupt would be diabled.
If ES2 = 1, UART2 interrupt would be enabled.

STC MCU Limited.

INT_CLKO (AUXR2) : External Interrupt Enable and Clock Output register

SFR Name	SFR Address	bit	B7	B6	B5	B4	B3	B2	B1	B0
INT_CLKO AUXR2	8FH	name	-	EX4	EX3	EX2	-	T2CLKO	T1CLKO	T0CLKO

EX4 (IE.6): Enable bit of **External Interrupt 4**($\overline{\text{INT4}}$)
If EX4 = 0, External Interrupt 4 ($\overline{\text{INT4}}$) would be diabled.
If EX4 = 1, External Interrupt 4 ($\overline{\text{INT4}}$) would be enabled.

EX3 (IE.5): Enable bit of **External Interrupt 3**($\overline{\text{INT3}}$)
If EX3 = 0, External Interrupt 3 ($\overline{\text{INT3}}$) would be diabled.
If EX3 = 1, External Interrupt 3 ($\overline{\text{INT3}}$) would be enabled.

EX2 (IE.4): Enable bit of **External Interrupt 2** ($\overline{\text{INT2}}$)
If EX2 = 0, External Interrupt 2 ($\overline{\text{INT2}}$) would be diabled.
If EX2 = 1, External Interrupt 2 ($\overline{\text{INT2}}$) would be enabled.

T2CLKO, T1CLKO,T0CLKO btis are not introduced here because they are not related with interrupts.

2. Interrupt Priority control Registers IP and IP2

Except external interrupt 2($\overline{\text{INT2}}$), external interrupt 3($\overline{\text{INT3}}$), Timer 2 interrrupt, external interrupt 4($\overline{\text{INT4}}$), serial port 3(UART3) interrupt, serial port 4(UART4) interrupt, Timer 3 interrrupt and Timer 4 interrrup, each interrupt source of STC15 all can be individually programmed to one of two priority levels by setting or clearing the bit in Special Function Registers IP or IP2. A low-priority interrupt can itself be interrupted by a high-pority interrupt, but not by another low-priority interrupt. A high-priority interrupt can't be interrupted by any other interrupt source.

IP: Interrupt Priority Register (Bit-addressable)

SFR name	Address	bit	B7	B6	B5	B4	B3	B2	B1	B0
IP	B8H	name	PPCA	PLVD	PADC	PS	PT1	PX1	PT0	PX0

PPCA: PCA interrupt priority control bit.
if PPCA=0, PCA interrupt is assigned lowest priority (priority 0).
if PPCA=1, PCA interrupt is assigned highest priority (priority 1).

PLVD: Low voltage detection interrupt priority control bit.
if PLVD=0, Low voltage detection interrupt is assigned lowest priority(priority 0).
if PLVD=1, Low voltage detection interrupt is assigned highest priority(priority 1).

PADC: ADC interrupt priority control bit.
if PADC=0, ADC interrupt is assigned lowest priority (priority 0).
if PADC=1, ADC interrupt is assigned highest priority (priority 1).

PS : Serial Port 1 (UART1) interrupt priority control bit.
if PS=0, UART1 interrupt is assigned lowest priority (priority 0).
if PS=1, UART1 interrupt is assigned highest priority (priority 1).

PT1 : Timer 1 interrupt priority control bit.
if PT1=0, Timer 1 interrupt is assigned lowest priority (priority 0).
if PT1=1, Timer 1 interrupt is assigned highest priority (priority 1).

PX1 : External interrupt 1 priority control bit.
if PX1=0, External interrupt 1 is assigned lowest priority (priority 0).
if PX1=1, External interrupt 1 is assigned highest priority (priority 1).

PT0 : Timer 0 interrupt priority control bit.
if PT0=0, Timer 0 interrupt is assigned lowest priority (priority 0).
if PT0=1, Timer 0 interrupt is assigned highest priority (priority 1).

PX0 : External interrupt 0 priority control bit.
if PX0=0, External interrupt 0 is assigned lowest priority (priority 0).
if PX0=1, External interrupt 0 is assigned highest priority (priority 1).

STC MCU Limited.

IP2: Interrupt Priority Register (Non bit-addressable)

SFR name	Address	bit	B7	B6	B5	B4	B3	B2	B1	B0
IP2	B5H	name	-	-	-	-	-	-	PSPI	PS2

PSPI : SPI interrupt priority control bit.
if PSPI=0, SPI interrupt is assigned lowest priority (priority 0).
if PSPI=1, SPI interrupt is assigned highest priority (priority 1).

PS2 : Serial Port 2 (UART2) interrupt priority control bit.
if PS2=0, UART2 interrupt is assigned lowest priority (priority 0).
if PS2=1, UART2 interrupt is assigned highest priority (priority 1).

3. TCON register: Timer/Counter Control Register (Bit-Addressable)

SFR name	Address	bit	B7	B6	B5	B4	B3	B2	B1	B0
TCON	88H	name	TF1	TR1	TF0	TR0	IE1	IT1	IE0	IT0

TF1: Timer/Counter 1 Overflow Flag. Set by hardware on Timer/Counter 1 overflow. The flag can be cleared by software but is automatically cleared by hardware when processor vectors to the Timer 1 interrupt routine.
If TF1 = 0, No Timer 1 overflow detected.
If TF1 = 1, Timer 1 has overflowed.

TR1: Timer/Counter 1 Run Control bit. Set/cleared by software to turn Timer/Counter on/off.
If TR1 = 0, Timer 1 disabled.
If TR1 = 1, Timer 1 enabled.

TF0: Timer/Counter 0 Overflow Flag. Set by hardware on Timer/Counter 0 overflow. The flag can be cleared by software but is automatically cleared by hardware when processor vectors to the Timer 0 interrupt routine.
If TF0 = 0, No Timer 0 overflow detected.
If TF0 = 1, Timer 0 has overflowed.

TR0: Timer/Counter 0 Run Control bit. Set/cleared by software to turn Timer/Counter on/off.
If TR0 = 0, Timer 0 disabled.
If TR0 = 1, Timer 0 enabled.

IE1: External Interrupt 1 request flag. Set by hardware when external interrupt rising or falling edge defined by IT1 is detected. The flag can be cleared by software but is automatically cleared when the external interrupt 1 service routine has been processed.

IT1 : External Intenupt 1 Type Select bit. Set/cleared by software to specify rising / falling edges triggered external interrupt 1.
If IT1 = 0, INT1 is both rising and falling edges triggered.
If IT1 = 1, INT1 is only falling edge triggered.

IE0 : External Interrupt 0 request flag. Set by hardware when external interrupt rising or falling edge defined by IT0 is detected. The flag can be cleared by software but is automatically cleared when the external interrupt 1 service routine has been processed.

IT0 : External Intenupt 0 Type Select bit. Set/cleared by software to specify rising / falling edges triggered external interrupt 0.
If IT0 = 0, INT0 is both rising and falling edges triggered.
If IT0 = 1, INT0 is only falling edge triggered.

STC MCU Limited.

4. SCON register: Serial Port 1 (UART1) Control Register (Bit-Addressable)

SFR name	Address	bit	B7	B6	B5	B4	B3	B2	B1	B0
SCON	98H	name	SM0/FE	SM1	SM2	REN	TB8	RB8	TI	RI

TI : Transmit interrupt flag. Set by hardware when a byte of data has been transmitted by UART1 (after the 8th bit in 8-bit UART Mode, or at the beginning of the STOP bit in 9-bit UART Mode). When the UART1 interrupt is enabled, setting this bit causes the CPU to vector to the UART1 interrupt service routine. This bit must be cleared manually by software.

RI : Receive interrupt flag. Set to '1' by hardware when a byte of data has been received by UART1 (set at the STOP bit sam-pling time). When the UART1 interrupt is enabled, setting this bit to '1' causes the CPU to vector to the UART1 interrupt service routine. This bit must be cleared manually by software.

The other bits of SCON register without relation to the UART1 interrupt is not be introduced here.

STC MCU Limited.

5. S2CON register: Serial Port 2 (UART2) Control Register (No bit-Addressable)

SFR name	Address	bit	B7	B6	B5	B4	B3	B2	B1	B0
S2CON	9AH	name	S2SM0	-	S2SM2	S2REN	S2TB8	S2RB8	S2TI	S2RI

S2TI : Transmit interrupt flag. Set by hardware when a byte of data has been transmitted by UART2 (after the 8th bit in 8-bit UART Mode, or at the beginning of the STOP bit in 9-bit UART Mode). When the UART2 interrupt is enabled, setting this bit causes the CPU to vector to the UART2 interrupt service routine. This bit must be cleared manually by software.

S2RI : Receive interrupt flag. Set to '1' by hardware when a byte of data has been received by UART2 (set at the STOP bit sam-pling time). When the UART2 interrupt is enabled, setting this bit to '1' causes the CPU to vector to the UART2 interrupt service routine. This bit must be cleared manually by software.

The other bits of S2CON register without relation to the UART2 interrupt is not be introduced here.

6. S3CON register: Serial Port 3 (UART3) Control Register (No bit-Addressable)

SFR name	Address	bit	B7	B6	B5	B4	B3	B2	B1	B0
S3CON	ACH	name	S3SM0	S3ST3	S3SM2	S3REN	S3TB8	S3RB8	S3TI	S3RI

S3TI : Transmit interrupt flag. Set by hardware when a byte of data has been transmitted by UART3 (after the 8th bit in 8-bit UART Mode, or at the beginning of the STOP bit in 9-bit UART Mode). When the UART3 interrupt is enabled, setting this bit causes the CPU to vector to the UART3 interrupt service routine. This bit must be cleared manually by software.

S3RI : Receive interrupt flag. Set to '1' by hardware when a byte of data has been received by UART3 (set at the STOP bit sam-pling time). When the UART3 interrupt is enabled, setting this bit to '1' causes the CPU to vector to the UART3 interrupt service routine. This bit must be cleared manually by software.

The other bits of S3CON register without relation to the UART3 interrupt is not be introduced here.

7. S4CON register: Serial Port 4 (UART4) Control Register (No bit-Addressable)

SFR name	Address	bit	B7	B6	B5	B4	B3	B2	B1	B0
S4CON	84H	name	S4SM0	S4ST3	S4SM2	S4REN	S4TB8	S4RB8	S4TI	S4RI

S4TI : Transmit interrupt flag. Set by hardware when a byte of data has been transmitted by UART4 (after the 8th bit in 8-bit UART Mode, or at the beginning of the STOP bit in 9-bit UART Mode). When the UART4 interrupt is enabled, setting this bit causes the CPU to vector to the UART4 interrupt service routine. This bit must be cleared manually by software.

S4RI : Receive interrupt flag. Set to '1' by hardware when a byte of data has been received by UART4 (set at the STOP bit sam-pling time). When the UART4 interrupt is enabled, setting this bit to '1' causes the CPU to vector to the UART4 interrupt service routine. This bit must be cleared manually by software.

The other bits of S4CON register without relation to the UART4 interrupt is not be introduced here.

8. Register related with LVD interrupt: Power Control register PCON (Non bit-Addressable)

SFR name	Address	bit	B7	B6	B5	B4	B3	B2	B1	B0
PCON	87H	name	SMOD	SMOD0	LVDF	POF	GF1	GF0	PD	IDL

SMOD: double Baud rate control bit.
0 : Disable double Baud rate of the UART.
1 : Enable double Baud rate of the UART in mode 1,2,or 3.

SMOD0: Frame Error select.
0 : SCON.7 is SM0 function.
1 : SCON.7 is FE function. Note that FE will be set after a frame error regardless of the state of SMOD0.

LVDF : Pin Low-Voltage Flag. Once low voltage condition is detected (VCC power is lower than LVD voltage), it is set by hardware (and should be cleared by software).

POF : Power-On flag. It is set by power-off-on action and can only cleared by software.

GF1 : General-purposed flag 1

GF0 : General-purposed flag 0

PD : Power-Down bit.

IDL : Idle mode bit.

IE: Interrupt Enable Rsgister (Bit-addressable)

SFR name	Address	bit	B7	B6	B5	B4	B3	B2	B1	B0
IE	A8H	name	EA	ELVD	EADC	ES	ET1	EX1	ET0	EX0

EA : disables all interrupts.
If EA = 0,no interrupt will be acknowledged.
If EA = 1, each interrupt source is individually enabled or disabled by setting or clearing its enable bit.

ELVD: Low volatge detection interrupt enable bit.
If ELVD = 0, Low voltage detection interrupt would be diabled.
If ELVD = 1, Low voltage detection interrupt would be enabled.

STC MCU Limited

9. ADC_CONTR: AD Control register (Non bit-Addressable)

SFR name	Address	bit	B7	B6	B5	B4	B3	B2	B1	B0
ADC_CONTR	BCH	name	ADC_POWER	SPEED1	SPEED0	ADC_FLAG	ADC_START	CHS2	CHS1	CHS0

ADC_POWER : When clear, shut down the power of ADC bolck. When set, turn on the power of ADC block.

ADC_FLAG : ADC interrupt flag.It will be set by the device after the device has finished a conversion, and should be cleared by the user's software.

ADC_STRAT : ADC start bit, which enable ADC conversion.It will automatically cleared by the device after the device has finished the conversion

IE: Interrupt Enable Rsgister (Bit-addressable)

SFR name	Address	bit	B7	B6	B5	B4	B3	B2	B1	B0
IE	A8H	name	EA	ELVD	EADC	ES	ET1	EX1	ET0	EX0

EA : disables all interrupts.
If EA = 0,no interrupt will be acknowledged.
If EA = 1, each interrupt source is individually enabled or disabled by setting or clearing its enable bit.

EADC: ADC interrupt enable bit.
If EADC = 0, ADC interrupt would be diabled.
If EADC = 1, ADC interrupt would be enabled.

STC MCU Limited.

10. Register related with PCA interrupt

CCON: PCA Control Register (bit-Addressable)

SFR name	Address	bit	B7	B6	B5	B4	B3	B2	B1	B0
CCON	D8H	name	CF	CR	-	-	-	CCF2	CCF1	CCF0

CF : PCA Counter Overflow flag. Set by hardware when the counter rolls over. CF flags an interrupt if bit ECF in CMOD is set. CF may be set by either hardware or software but can only be cleared by software.

CR : PCA Counter Run control bit. Set by software to turn the PCA counter on. Must be cleared by software to turn the PCA counter off.

CCF1: PCA Module 2 interrupt flag. Set by hardware when a match or capture occurs. Must be cleared by software.

CCF1: PCA Module 1 interrupt flag. Set by hardware when a match or capture occurs. Must be cleared by software.

CCF0: PCA Module 0 interrupt flag. Set by hardware when a match or capture occurs. Must be cleared by software.

STC MCU Limited.

CMOD: PCA Mode Register (Non bit-Addressable)

SFR name	Address	bit	B7	B6	B5	B4	B3	B2	B1	B0
CMOD	D9H	name	CIDL	-	-	-	CPS2	CPS1	CPS0	ECF

CIDL : Counter Idle control bit.
CIDL=0 programs the PCA Counter to continue functioning during idle mode.
CIDL=1 programs it to be gated off during idle.

CPS2, CPS1, CPS0 : PCA Counter Pulse Select bits, as shown below.

CPS2	CPS1	CPS0	PCA Counter Pulse Select bits.
0	0	0	0, System clock, SYSclk/12
0	0	1	1, System clock, SYSclk/2
0	1	0	2, Timer 0 overflow pulse. the frequency of PWM output can be adjusted by changing Timer 0 overflow.
0	1	1	3, External clock at ECI/P1.2 pin (the maximum frequency = SYSclk/2)
1	0	0	4, System clock, SYSclk
1	0	1	5, System clock/4, SYSclk/4
1	1	0	6, System clock/6, SYSclk/6
1	1	1	7, System clock/8, SYSclk/8

ECF : PCA Enable Counter Overflow interrupt. ECF=1 enables CF bit in CCON to generate an interrupt.

CCAPMn register (Non bit-Addressable)

SFR name	Address	bit	B7	B6	B5	B4	B3	B2	B1	B0
CCAPM0	DAH	name	-	ECOM0	CAPP0	CAPN0	MAT0	TOG0	PWM0	ECCF0
CCAPM1	DBH	name	-	ECOM1	CAPP1	CAPN1	MAT1	TOG1	PWM1	ECCF1
CCAPM2	DCH	name	-	ECOM2	CAPP2	CAPN2	MAT2	TOG2	PWM2	ECCF2

ECOMn : Enable Comparator. ECOMn=1 enables the comparator function.

CAPPn : Capture Positive, CAPPn=1 enables positive edge capture.

CAPNn : Capture Negative, CAPNn=1 enables negative edge capture.

MATn : Match. When MATn=1, a match of the PCA counter with this module's compare/capture register causes the CCFn bit in CCON to be set.

TOGn : Toggle. When TOGn=1, a match of the PCA counter with this module's compare/capture register causes the CEXn pin to toggle.

PWMn : Pulse Width Modulation. PWMn=1 enables the CEXn pin to be used as a pulse width modulated output.

ECCFn : Enable CCF interrupt. Enables compare/capture flag CCFn in the CCON register to generate

11. Register related with SPI interrupt

SPSTAT: SPI Status Control Register (Non bit-Addressable)

SFR name	Address	bit	B7	B6	B5	B4	B3	B2	B1	B0
SPSTAT	CDH	name	SPIF	WCOL	-	-	-	-	-	-

SPIF : SPI transfer completion flag.When a serial transfer finishes, the SPIF bit is set and an interrupt is generated if both the ESPI(IE.6) bit and the EA(IE.7) bit are set. If SS is an input and is driven low when SPI is in master mode with SSIG = 0, SPIF will also be set to signal the "mode change".The SPIF is cleared in software by "writing 1 to this bit".

WCOL: SPI write collision flag. The WCOL bit is set if the SPI data register, SPDAT, is written during a data transfer. The WCOL flag is cleared in software by "writing 1 to this bit"

IE: Interrupt Enable Rsgister (Bit-addressable)

SFR name	Address	bit	B7	B6	B5	B4	B3	B2	B1	B0
IE	A8H	name	EA	ELVD	EADC	ES	ET1	EX1	ET0	EX0

EA : disables all interrupts.

If EA = 0,no interrupt will be acknowledged.

If EA = 1, each interrupt source is individually enabled or disabled by setting or clearing its enable bit.

IE2: Interrupt Enable 2 Rsgister (Non bit-addressable)

SFR name	Address	bit	B7	B6	B5	B4	B3	B2	B1	B0
IE2	AFH	name	-	-	-	-	-	-	ESPI	ES2

ESPI: SPI interrupt enable bit.

If ESPI = 0, SPI interrupt would be diabled.

If ESPI = 1, SPI interrupt would be enabled.

STC MCU Limited

6.6 Interrupt Priorities

Except external interrupt 2($\overline{\text{INT2}}$), external interrupt 3($\overline{\text{INT3}}$), Timer 2 interrrupt, external interrupt 4($\overline{\text{INT4}}$), serial port 3(UART3) interrupt, serial port 4(UART4) interrupt, Timer 3 interrrupt, Timer 4 interrrupt and comparator interrupt, each interrupt source of STC15 all can be individually programmed to one of two priority levels by setting or clearing the bit in Special Function Registers IP or IP2. A low-priority interrupt can itself be interrupted by a high-pority interrupt, but not by another low-priority interrupt. A high-priority interrupt can't be interrupted by any other interrupt source.

If two requests of different priority levels are received simultaneously, the request of higher priority level is serviced. If requests of the same priority level are received simultaneously, an internal polling sequence determines which request is serviced. Thus within each priority level there is a second priority structure determined by the polling sequence, as follows:

	Interrupt Sourc	**Priority Within Level**
0.	INT0	(highest)
1.	Timer 0	
2.	INT1	
3.	Timer 1	
4.	UART1	
5.	ADC interrupt	
6.	LVD	
7.	PCA	
8.	UART2	
9.	SPI	
10.	$\overline{\text{INT2}}$	
11.	$\overline{\text{INT3}}$	
12.	Timer 2	
13.		
14.		
15.		
16.	$\overline{\text{INT4}}$	
17.	UART3	
18.	UART4	
19.	Timer 3	
20.	Timer 4	
21.	Comparator	(lowest)

STC MCU Limited.

Note that the "priority within level" structure is only used to resolve *simultaneous requests of the same prionty level.*

In C language program. the interrupt polling sequence number is equal to interrupt number, for example,

```
void    Int0_Routine(void)          interrupt  0;
void    Timer0_Rountine(void)       interrupt  1;
void    Int1_Routine(void)          interrupt  2;
void    Timer1_Rountine(void)       interrupt  3;
void    UART1_Routine(void)         interrupt  4;
void    ADC_Routine(void)           interrupt  5;
void    LVD_Routine(void)           interrupt  6;
void    PCA_Routine(void)           interrupt  7;
void    UART2_Routine(void)         interrupt  8;
void    SPI_Routine(void)           interrupt  9;
void    Int2_Routine(void)          interrupt  10;
void    Int3_Routine(void)          interrupt  11;
void    Timer2_Routine(void)        interrupt  12;
void    PWM_Routine(void)           interrupt  13;
void    Int4_Routine(void)          interrupt  16;
void    S3_Routine(void)            interrupt  17;
void    S4_Routine(void)            interrupt  18;
void    Timer3_Routine(void)        interrupt  19;
void    Timer4_Routine(void)        interrupt  20;
void    Comparator_Routine(void)    interrupt  21;
```

STC MCU Limited.

6.7 Interrupt Handling

The CPU usually has serveral lines connected to it which can receive interrupts in the form of voltage changes, When an interrupt is received, the following actions are carried out by the MCU:

1. The current instruction in the mian program is allowed to complete execution.
2. The address of the next instruction is pushed to the stack.
3. Control jump to the start of a subprogram, known as an Interrupt Service Routine (ISR).
4. The ISR code is executed.
5. When the instruction RETI (Return from Interrupt) is encountered in the ISR, the return address is popped from the stack into the PC.
6. Control is returned to the original location in the main program.

An Interrupt Service Routine ISR (sometimes called interrupt handler) is similar in form to a subroutine. However the great difference between the two is that the subroutine is called by an instruction within the program, while the ISR is activated by a hardware voltage change into the CPU.

External interrupt pins and other interrupt sources are sampled at the rising edge of each instruction *OPcode fetch cycle*. The samples are polled during the next instruction *OPcode fetch cycle*. If one of the flags was in a set condition of the first cycle, the second cycle of polling cycles will find it and the interrupt system will generate an hardware LCALL to the appropriate service routine as long as it is not blocked by any of the following conditions.

STC MCU Limited.

Block conditions :

- An interrupt of equal or higher priority level is already in progress.
- The current cycle (polling cycle) is not the final cycle in the execution of the instruction in progress.
- The instruction in progress is RETI or any write to the IE, IE2, IP and IP2 registers.
- The ISP/IAP activity is in progress.

Any of these four conditions will block the generation of the hardware LCALL to the interrupt service routine. Condition 2 ensures that the instruction in progress will be completed before vectoring into any service routine. Condition 3 ensures that if the instruction in progress is RETI or any access to IE, IE2, IP and IP2, then at least one or more instruction will be executed before any interrupt is vectored to.

The polling cycle is repeated with the last clock cycle of each instruction cycle. Note that if an interrupt flag is active but not being responded to for one of the above conditions, if the flag is not still active when the blocking condition is removed, the denied interrupt will not be serviced. In other words, the fact that the interrupt flag was once active but not being responded to for one of the above conditions, if the flag is not still active when the blocking condition is removed, the denied interrupt will not be serviced. The interrupt flag was once active but not serviced is not kept in memory. Every polling cycle is new.

Note that if an interrupt of higher priority level goes active prior to the rising edge of the third machine cycle, then in accordance with the above rules it will be vectored to during fifth and sixth machine cycle, without any instruction of the lower priority routine having been executed.

Thus the processor acknowledges an interrupt request by executing a hardware-generated LCALL to the appropriate servicing routine. In some cases it also clears the flag that generated the interrupt, and in other cases it doesn't. It never clears the Serial Port flags. This has to be done in the user's software. It clears an external interrupt flag (IE0 or IE1) only if it was transition-activated. The hardware-generated LCALL pushes the contents of the Program Counter onto the stack (but it does not save the PSW) and reloads the PC with an address that depends on the source of the interrupt being vectored to, as shown be low.

Source	Vector Address
External Interrupt 0	0003H
Timer 0	000BH
External Interrupt 1	0013H
Timer 1	001BH
S1(UART1)	0023H
ADC interrupt	002BH
LVD	0033H
PCA	003BH
S2(UART2)	0043H
SPI	004BH
External Interrupt 2	0053H
External Interrupt 3	005BH
Timer 2	0063H
/	006BH
/	0073H
/	007BH
External Interrupt 4	0083H
S3(UART3)	008BH
S4(UART4)	0093H
Timer 3	009BH
Timer 4	00A3H
Comparator	00ABH

STC MCU Limited.

Execution proceeds from that location until the RETI instruction is encountered. The RETI instruction informs the processor that this interrupt routine is no longer in progress, then pops the top two bytes from the stack and reloads the Program Counter. Execution of the interrupted program continues from where it left off.

Note that a simple RET instruction would also have returned execution to the interrupted program, but it would have left the interrupt control system thinking an interrupt was still in progress.

6.8 Interrupt Nesting

The interrupt requests of a higher priority can preempt the interrupt requests and service routine of a lower priority. Only the interrupt service routine of the higher priority has been accomplished, should the service of routine of the lower priority be continue to execute. This is called interrupt nesting. The schematic diagram of interrupt nesting is shown below.

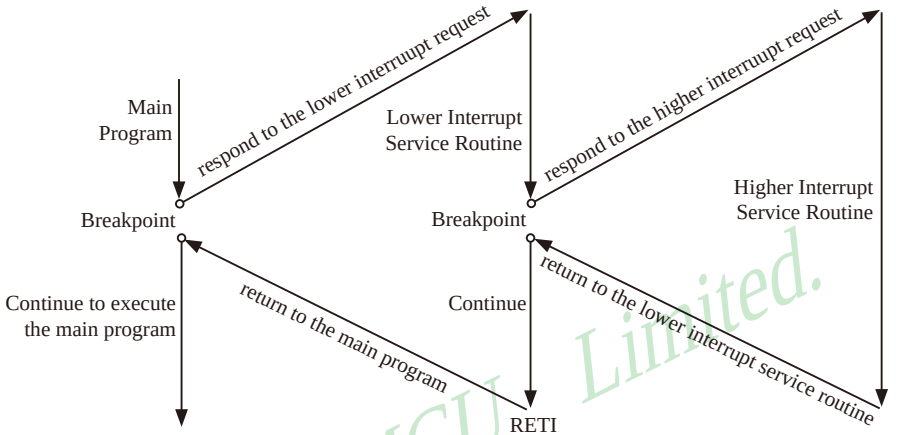

STC MCU Limited.

6.9 External Interrupts

The External Interrupts INT0 and INT1 can be generated on rising, falling or both edges, depending on bits IT0/ TCON.0 and IT1/TCON.2 in Register TCON. The flags that actually request these interrupts are bits IE0/TCON.1 and IE1/TCON.3 in register TCON, which would be automatically cleared when the external interrupts service routine is vectored to. The External Interrupts INT0 and INT1 can be generated on both rising and falling edge if the bits ITx = 0 (x = 0,1). The External Interrupts INT0 and INT1 only can be generated on falling edge if the bits ITx = 1 (x = 0,1). External interrupts also can be used to wake up MCU from Stop/Power-Down mode.

The External Interrupts $\overline{\text{INT2}}$, $\overline{\text{INT3}}$ and $\overline{\text{INT4}}$ only can be falling-activated. The request flags of external interrupt 2~4 are invisible to users. When an external interrupt is generated, the interrupt request flag would be cleared by the hardware if the service routine is vectored to or EXn = 0 (n = 2,3,4).

If the external interrupt is falling or rising edges-activated, the external source has to hold the request active until the requested interrupt is actually generated. Then it has to deactivate the request before the interrupt service routine is completed, or else another interrupt will be generated. Since the external interrupt pins are sampled once each machine cycle, an input high or low should hold for at least one system clocks to ensure sampling.

3 channels Capture/Compare uints(CCP/PCA/PWM) also can be used as external Interrupts(can be generated on rising or falling edge).

6.10 Interrupt Demo Program (C and ASM)

6.10.1 External Interrupt 0 (INT0) Demo Program

6.10.1.1 External Interupt INT0 (rising + falling edge) Demo Program (C and ASM)

1.C Program Listing

```
/*---------------------------------------------------------------------------------------------------*/
/* --- STC MCU  Limited. ---------------------------------------------------------------------------*/
/* --- Exam Program of INT0 ------------------------------------------------------------------------*/
/* --- Mobile: (86)13922805190 ----------------------------------------------------------------------*/
/* --- Fax: 86-755-82905966 ------------------------------------------------------------------------*/
/* --- Tel: 86-755-82948412 ------------------------------------------------------------------------*/
/* --- Web: www.STCMCU.com -------------------------------------------------------------------------*/
/* If you want to use the program or the program referenced in the  ----------------------------*/
/* article, please specify in which data and procedures from STC    ----------------------------*/
/*---- In Keil C development environment, select the Intel 8052 to compiling ----------------------*/
/*----  And only contain < reg51.h > as header file ------------------------------------------------*/
/*---------------------------------------------------------------------------------------------------*/

//suppose the frequency of test chip is 18.432MHz

#include "reg51.h"
#include "intrins.h"

//-----------------------------------------
bit     FLAG;                   //1: interrupt can be generated on rising edge
                                //0: interrupt can be generated on falling edge
sbit    P10     =       P1^0;

//-----------------------------------------
//External Interrupt Service Routine
void exint0() interrupt 0               //INT0, interrupt 0 (location at 0003H)
{
        P10     =       !P10;
        FLAG    =       INT0;           //save the state of INT0 pin, INT0=0(falling); INT0=1(rising)
}

//-----------------------------------------------
void main()
{
        INT0    =       1;
        IT0     =       0;              //Setting INT0 interrupt type
                                        //(1:only falling  0:both falling and rising edges)
        EX0     =       1;              //enable INT0 interrupt
        EA      =       1;

        while (1);
}
```

STC MCU Limited.

2.Assembler Listing

```
/*---------------------------------------------------------------------------------------------------*/
/* --- STC MCU  Limited. ---------------------------------------------------------------------------*/
/* --- Exam Program of INT0 ------------------------------------------------------------------------*/
/* --- Mobile: (86)13922805190 ---------------------------------------------------------------------*/
/* --- Fax: 86-755-82905966 ------------------------------------------------------------------------*/
/* --- Tel: 86-755-82948412 ------------------------------------------------------------------------*/
/* --- Web: www.STCMCU.com -------------------------------------------------------------------------*/
/* If you want to use the program or the program referenced in the  ----------------------------*/
/* article, please specify in which data and procedures from STC    ----------------------------*/
/*---- In Keil C development environment, select the Intel 8052 to compiling ----------------*/
/*----  And only contain < reg51.h > as header file ------------------------------------------*/
/*---------------------------------------------------------------------------------------------------*/

//suppose the frequency of test chip is 18.432MHz

FLAG    BIT     20H.0               //1: interrupt can be generated on rising edge
                                    //0: interrupt can be generated on falling edge
//-----------------------------------------

        ORG     0000H
        LJMP    MAIN

        ORG     0003H               //INT0, interrupt 0 (location at 0003H)
        LJMP    EXINT0
//-----------------------------------------

        ORG     0100H
MAIN:
        MOV     SP,     #3FH

        CLR     IT0                 //Setting INT0 interrupt type
                                    //(1:only falling  0:both falling and rising edges)
        SETB    EX0                 //enable INT0 interrupt
        SETB    EA
        SJMP    $

//-----------------------------------------
//External Interrupt Service Routine

EXINT0:
        CPL     P1.0
        PUSH    PSW
        MOV     C,      INT0        //read the status of INT0 pin
        MOV     FLAG,   C           //save, INT0=0(falling edge); INT0=1(rising edge)
        POP     PSW
        RETI
;-----------------------------------------
        END
```

STC MCU Limited.

6.10.1.2 External Interrupt INT0 (falling edge) Demo Program (C and ASM)

1.C Program Listing

```
/*---------------------------------------------------------------------------------------------*/
/* --- STC MCU Limited. ----------------------------------------------------------------------*/
/* --- Exam Program of INT0 ------------------------------------------------------------------*/
/* --- Mobile: (86)13922805190 ---------------------------------------------------------------*/
/* --- Fax: 86-755-82905966 ------------------------------------------------------------------*/
/* --- Tel: 86-755-82948412 ------------------------------------------------------------------*/
/* --- Web: www.STCMCU.com -------------------------------------------------------------------*/
/* If you want to use the program or the program referenced in the ----------------------------*/
/* article, please specify in which data and procedures from STC ------------------------------*/
/*---- In Keil C development environment, select the Intel 8052 to compiling ------------------*/
/*----  And only contain < reg51.h > as header file ------------------------------------------*/
/*---------------------------------------------------------------------------------------------*/

//suppose the frequency of test chip is 18.432MHz

#include "reg51.h"
#include "intrins.h"

//-----------------------------------------------

sbit    P10     =       P1^0;

//-----------------------------------------
//External interrupt0 service routine
void exint0() interrupt 0                       //INT0, interrupt 0 (location at 0003H)
{
        P10     =       !P10;
}

//-----------------------------------------------

void main()
{
        INT0    =       1;
        IT0     =       1;                      //Setting INT0 interrupt type
                                                //(1:only falling  0:both falling and rising edges)
        EX0     =       1;                      //enable INT0 interrupt
        EA      =       1;

        while (1);
}
```

STC MCU Limited.

2.Assembler Listing

```
/*---------------------------------------------------------------------------------------------------------*/
/* --- STC MCU  Limited. ---------------------------------------------------------------------------------*/
/* --- Exam Program of INT0 ------------------------------------------------------------------------------*/
/* --- Mobile: (86)13922805190 ---------------------------------------------------------------------------*/
/* --- Fax: 86-755-82905966 ------------------------------------------------------------------------------*/
/* --- Tel: 86-755-82948412 ------------------------------------------------------------------------------*/
/* --- Web: www.STCMCU.com -------------------------------------------------------------------------------*/
/* If you want to use the program or the program referenced in the  ----------------------------*/
/* article, please specify in which data and procedures from STC    ----------------------------*/
/*---- In Keil C development environment, select the Intel 8052 to compiling ------------------*/
/*----  And only contain < reg51.h > as header file ------------------------------------------------*/
/*---------------------------------------------------------------------------------------------------------*/

//suppose the frequency of test chip is 18.432MHz

        ORG     0000H
        LJMP    MAIN

        ORG     0003H                   //INT0, interrupt 0 (location at 0003H)
        LJMP    EXINT0

//-----------------------------------------

        ORG     0100H
MAIN:
        MOV     SP,     #3FH

        SETB    IT0                     //Setting INT0 interrupt type
                                        //(1:only falling  0:both falling and rising edges)
        SETB    EX0                     //enable INT0 interrupt
        SETB    EA
        SJMP    $

//-----------------------------------------
//External Interrupt Service Routine

EXINT0:
        CPL     P1.0
        RETI

;-----------------------------------------

        END
```

STC MCU Limited.

6.10.2 External Interrupt 1(INT1) Demo Program

6.10.2.1 External Interrupt INT1 (rising + falling edge) Demo Program (C and ASM)

1.C Program Listing

```
/*---------------------------------------------------------------------------------------------*/
/* --- STC MCU  Limited. ---------------------------------------------------------------------*/
/* --- Exam Program of INT1 ------------------------------------------------------------------*/
/* --- Mobile: (86)13922805190 ---------------------------------------------------------------*/
/* --- Fax: 86-755-82905966 ------------------------------------------------------------------*/
/* --- Tel: 86-755-82948412 ------------------------------------------------------------------*/
/* --- Web: www.STCMCU.com -------------------------------------------------------------------*/
/* If you want to use the program or the program referenced in the  ----------------------------*/
/* article, please specify in which data and procedures from STC    ----------------------------*/
/*---- In Keil C development environment, select the Intel 8052 to compiling ------------------*/
/*----  And only contain < reg51.h > as header file ---------------------------------------------*/
/*---------------------------------------------------------------------------------------------*/

//suppose the frequency of test chip is 18.432MHz

#include "reg51.h"
#include "intrins.h"

//-----------------------------------------------

bit     FLAG;                   //1: interrupt can be generated on rising edge
                                //0: interrupt can be generated on falling edge
sbit    P10     =       P1^0;

//-----------------------------------------
//External Interrupt Service Routine
void exint1() interrupt 2               //INT1, interrupt 0 (location at 0013H)
{
        P10     =       !P10;
        FLAG    =       INT1;           //Save the status of INT1 pin, INT1=0(falling); INT1=1(rising)
}

//-----------------------------------------------
void main()
{
        INT1    =       1;
        IT1     =       0;              //Setting INT1 interrupt type
                                        //(1:only falling  0:both falling and rising edges)
        EX1     =       1;              //enable INT1 interrupt
        EA      =       1;

        while (1);
}
```

STC MCU Limited.

2.Assembler Listing

```
/*---------------------------------------------------------------------------------------------------*/
/* --- STC MCU  Limited. ---------------------------------------------------------------------------*/
/* --- Exam Program of INT1 ------------------------------------------------------------------------*/
/* --- Mobile: (86)13922805190 ---------------------------------------------------------------------*/
/* --- Fax: 86-755-82905966 ------------------------------------------------------------------------*/
/* --- Tel: 86-755-82948412 ------------------------------------------------------------------------*/
/* --- Web: www.STCMCU.com -------------------------------------------------------------------------*/
/* If you want to use the program or the program referenced in the  ----------------------------*/
/* article, please specify in which data and procedures from STC    ----------------------------*/
/*---- In Keil C development environment, select the Intel 8052 to compiling ------------------*/
/*----  And only contain < reg51.h > as header file ---------------------------------------------*/
/*---------------------------------------------------------------------------------------------------*/

//suppose the frequency of test chip is 18.432MHz

FLAG    BIT     20H.0                   //1: interrupt can be generated on rising edge
                                        //0: interrupt can be generated on falling edge
//---------------------------------------
        ORG     0000H
        LJMP    MAIN

        ORG     0013H                   //INT1, interrupt 0 (location at 0013H)
        LJMP    EXINT1

//---------------------------------------
        ORG     0100H
MAIN:
        MOV     SP,     #3FH

        CLR     IT1                     //Setting INT1 interrupt type
                                        //(1:only falling  0:both falling and rising edges)
        SETB    EX1                     //enable INT1 interrupt
        SETB    EA
        SJMP    $

//---------------------------------------
//External Interrupt Service Routine

EXINT1:
        CPL     P1.0
        PUSH    PSW
        MOV     C,      INT1            //read the status of INT1 pin
        MOV     FLAG,   C               //save, INT1=0(falling); INT0=1(rising)
        POP     PSW
        RETI
;---------------------------------------
        END
```

STC MCU Limited.

6.10.2.2 External Interrupt INT1 (falling edge) Demo Program (C and ASM)

1.C Program Listing

```
/*---------------------------------------------------------------------------------------------------*/
/* --- STC MCU  Limited. ---------------------------------------------------------------------------*/
/* --- Exam Program of INT1 ------------------------------------------------------------------------*/
/* --- Mobile: (86)13922805190 ---------------------------------------------------------------------*/
/* --- Fax: 86-755-82905966 ------------------------------------------------------------------------*/
/* --- Tel: 86-755-82948412 ------------------------------------------------------------------------*/
/* --- Web: www.STCMCU.com -------------------------------------------------------------------------*/
/* If you want to use the program or the program referenced in the  ----------------------------*/
/* article, please specify in which data and procedures from STC    ----------------------------*/
/*---- In Keil C development environment, select the Intel 8052 to compiling ----------------*/
/*----  And only contain < reg51.h > as header file ------------------------------------------*/
/*---------------------------------------------------------------------------------------------------*/

//suppose the frequency of test chip is 18.432MHz

#include "reg51.h"
#include "intrins.h"

//-----------------------------------------------

sbit        P10         =           P1^0;

//-----------------------------------------
//External Interrupt Service Routine
void exint1() interrupt 2                   //INT1, interrupt 0 (location at 0013H)
{
            P10         =           !P10;
}

//-----------------------------------------------

void main()
{
            INT1        =           1;
            IT1         =           1;              //Setting INT1 interrupt type
                                                    //(1:only falling  0:both falling and rising edges)
            EX1         =           1;              //Enable INT1 interrupt
            EA          =           1;

            while (1);
}
```

STC MCU Limited.

2.Assembler Listing

```
/*---------------------------------------------------------------------------------------------------------*/
/* --- STC MCU  Limited. ---------------------------------------------------------------------------------*/
/* --- Exam Program of INT1 ------------------------------------------------------------------------------*/
/* --- Mobile: (86)13922805190 ---------------------------------------------------------------------------*/
/* --- Fax: 86-755-82905966 ------------------------------------------------------------------------------*/
/* --- Tel: 86-755-82948412 ------------------------------------------------------------------------------*/
/* --- Web: www.STCMCU.com -------------------------------------------------------------------------------*/
/* If you want to use the program or the program referenced in the  ----------------------------*/
/* article, please specify in which data and procedures from STC    ----------------------------*/
/*---- In Keil C development environment, select the Intel 8052 to compiling ------------------*/
/*----  And only contain < reg51.h > as header file ------------------------------------------------*/
/*---------------------------------------------------------------------------------------------------------*/

//suppose the frequency of test chip is 18.432MHz
        ORG     0000H
        LJMP    MAIN

        ORG     0013H                   //INT1, interrupt 0 (location at 0013H)
        LJMP    EXINT1

//-----------------------------------------

        ORG     0100H
MAIN:
        MOV     SP,     #3FH

        SETB    IT1                     //Setting INT1 interrupt type
                                        //(1:only falling  0:both falling and rising edges)
        SETB    EX1                     //enable INT1 interrupt
        SETB    EA
        SJMP    $

//-----------------------------------------
//External Interrupt Service Routine

EXINT1:
        CPL     P1.0
        RETI

;-----------------------------------------

        END
```

STC MCU Limited.

6.10.3 External Interrupt 2 (INT2) (falling) Demo Program (C and ASM)

1.C Program Listing

```
/*---------------------------------------------------------------------------------------------------*/
/* --- STC MCU Limited. ----------------------------------------------------------------------------*/
/* --- Exam Program of (INT2) (falling edge) -------------------------------------------------------*/
/* --- Mobile: (86)13922805190 ---------------------------------------------------------------------*/
/* --- Fax: 86-755-82905966 ------------------------------------------------------------------------*/
/* --- Tel: 86-755-82948412 ------------------------------------------------------------------------*/
/* --- Web: www.STCMCU.com -------------------------------------------------------------------------*/
/* If you want to use the program or the program referenced in the  ----------------------------*/
/* article, please specify in which data and procedures from STC    ----------------------------*/
/*---- In Keil C development environment, select the Intel 8052 to compiling ------------------*/
/*----  And only contain < reg51.h > as header file ---------------------------------------------*/
/*---------------------------------------------------------------------------------------------------*/

//suppose the frequency of test chip is 18.432MHz

#include "reg51.h"
#include "intrins.h"

//-----------------------------------------------

sfr     INT_CLKO    =   0x8f;           //External interrupt control register
sbit    P10         =   P1^0;

//-----------------------------------------------
//External Interrupt Service Routine
void exint2() interrupt 10                      //INT2, interrupt 2 (location at 0053H)
{
    P10     =   !P10;

//  INT_CLKO    &=  0xEF;
//  INT_CLKO    |=  0x10;
}

void main()
{
    INT_CLKO    |=  0x10;           //(EX2 = 1), enable INT2 interrupt
    EA      =   1;

    while (1);
}
```

STC MCU Limited.

2.Assembler Listing

```
/*---------------------------------------------------------------------------------------------------*/
/* --- STC MCU  Limited. ---------------------------------------------------------------------------*/
/* --- Exam Program of (INT2) (falling edge) -------------------------------------------------------*/
/* --- Mobile: (86)13922805190 ---------------------------------------------------------------------*/
/* --- Fax: 86-755-82905966 ------------------------------------------------------------------------*/
/* --- Tel: 86-755-82948412 ------------------------------------------------------------------------*/
/* --- Web: www.STCMCU.com -------------------------------------------------------------------------*/
/* If you want to use the program or the program referenced in the  ----------------------------*/
/* article, please specify in which data and procedures from STC    ----------------------------*/
/*---- In Keil C development environment, select the Intel 8052 to compiling ------------------*/
/*----  And only contain < reg51.h > as header file ------------------------------------------------*/
/*---------------------------------------------------------------------------------------------------*/

//suppose the frequency of test chip is 18.432MHz


INT_CLKO    DATA    08FH                        //External interrupt control register
//-----------------------------------------
            ORG     0000H
            LJMP    MAIN

            ORG     0053H                       //INT2, interrupt 2 (location at 0053H)
            LJMP    EXINT2
//-----------------------------------------
            ORG     0100H
MAIN:
            MOV     SP,         #3FH

            ORL     INT_CLKO,       #10H        //(EX2 = 1), enable INT2 interrupt

            SETB    EA

            SJMP    $
//-----------------------------------------
//External Interrupt Service Routine

EXINT2:
            CPL     P1.0

//          ANL     INT_CLKO,       #0EFH

//          ORL     INT_CLKO,       #10H

            RETI
;-----------------------------------------
            END
```

STC MCU Limited.

6.10.4 External Interrupt 3 ($\overline{\text{INT3}}$)(falling) Demo Program (C and ASM)

1.C Program Listing

```
/*---------------------------------------------------------------------------------------------------*/
/* --- STC MCU  Limited. ---------------------------------------------------------------------------*/
/* --- Exam Program of (INT3) (falling edge) -------------------------------------------------------*/
/* --- Mobile: (86)13922805190 ---------------------------------------------------------------------*/
/* --- Fax: 86-755-82905966 ------------------------------------------------------------------------*/
/* --- Tel: 86-755-82948412 ------------------------------------------------------------------------*/
/* --- Web: www.STCMCU.com -------------------------------------------------------------------------*/
/* If you want to use the program or the program referenced in the  ----------------------------*/
/* article, please specify in which data and procedures from STC    ----------------------------*/
/*---- In Keil C development environment, select the Intel 8052 to compiling ------------------*/
/*----  And only contain < reg51.h > as header file ---------------------------------------------*/
/*---------------------------------------------------------------------------------------------------*/

//suppose the frequency of test chip is 18.432MHz

#include "reg51.h"
#include "intrins.h"

//-----------------------------------------------

sfr     INT_CLKO    =    0x8f;          //External interrupt control register
sbit    P10     =    P1^0;

//-----------------------------------------------
//External Interrupt Service Routine
void exint3() interrupt 11                          //INT3, interrupt 3 (location at 005BH)
{
        P10     =    !P10;

//      INT_CLKO    &=   0xDF;

//      INT_CLKO     |=   0x20;
}

void main()
{
        INT_CLKO    |=   0x20;          //(EX3 = 1), enable INT3 interrupt
        EA      =    1;

        while (1);
}
```

STC MCU Limited.

2.Assembler Listing

```
/*---------------------------------------------------------------------------------------------------*/
/* --- STC MCU  Limited. ---------------------------------------------------------------------------*/
/* --- Exam Program of (INT3) (falling edge) -------------------------------------------------------*/
/* --- Mobile: (86)13922805190 ---------------------------------------------------------------------*/
/* --- Fax: 86-755-82905966 ------------------------------------------------------------------------*/
/* --- Tel: 86-755-82948412 ------------------------------------------------------------------------*/
/* --- Web: www.STCMCU.com -------------------------------------------------------------------------*/
/* If you want to use the program or the program referenced in the  ----------------------------*/
/* article, please specify in which data and procedures from STC    ----------------------------*/
/*---- In Keil C development environment, select the Intel 8052 to compiling ------------------*/
/*----  And only contain < reg51.h > as header file ------------------------------------------------*/
/*---------------------------------------------------------------------------------------------------*/

//suppose the frequency of test chip is 18.432MHz

INT_CLKO    DATA    08FH                    //External Interrupt control
//-----------------------------------------

            ORG     0000H
            LJMP    MAIN

            ORG     005BH                   //INT3,  interrupt 3 (location at 005BH)
            LJMP    EXINT3
//-----------------------------------------

            ORG     0100H
MAIN:
            MOV     SP,         #3FH

            ORL     INT_CLKO,       #20H    //(EX3 = 1), enable INT3 interrupt

            SETB    EA

            SJMP    $

//-----------------------------------------
//External Interrupt Service Routine

EXINT3:
            CPL     P1.0

//          ANL     INT_CLKO,       #0DFH

//          ORL     INT_CLKO,       #20H

            RETI
;-----------------------------------------

            END
```

STC MCU Limited.

6.10.5 External Interrupt 4 (INT4) (falling) Demo Program (C and ASM)

1.C Program Listing

```
/*---------------------------------------------------------------------------------------------------*/
/* --- STC MCU  Limited. ---------------------------------------------------------------------------*/
/* --- Exam Program of (INT4) (falling edge) -------------------------------------------------------*/
/* --- Mobile: (86)13922805190 ---------------------------------------------------------------------*/
/* --- Fax: 86-755-82905966 ------------------------------------------------------------------------*/
/* --- Tel: 86-755-82948412 ------------------------------------------------------------------------*/
/* --- Web: www.STCMCU.com -------------------------------------------------------------------------*/
/* If you want to use the program or the program referenced in the  ----------------------------*/
/* article, please specify in which data and procedures from STC    ----------------------------*/
/*---- In Keil C development environment, select the Intel 8052 to compiling ------------------*/
/*----  And only contain < reg51.h > as header file ---------------------------------------------*/
/*---------------------------------------------------------------------------------------------------*/

//suppose the frequency of test chip is 18.432MHz

#include "reg51.h"
#include "intrins.h"

//-----------------------------------------------

sfr     INT_CLKO    =   0x8f;           //External interrupt control register
sbit    P10     =   P1^0;

//-----------------------------------------------
//External Interrupt Service Routine
void exint4() interrupt 16                      //INT4, interrupt 4 (location at 0083H)
{
    P10     =   !P10;

//  INT_CLKO    &=  0xBF;

//  INT_CLKO    |=  0x40;
}

void main()
{
    INT_CLKO    |=  0x40;           //(EX4 = 1), enable INT4 interrupt
    EA      =   1;

    while (1);
}
```

STC MCU Limited.

2.Assembler Listing

```
/*---------------------------------------------------------------------------------------------------*/
/* --- STC MCU  Limited. ---------------------------------------------------------------------------*/
/* --- Exam Program of (INT4) (falling edge) -------------------------------------------------------*/
/* --- Mobile: (86)13922805190 ---------------------------------------------------------------------*/
/* --- Fax: 86-755-82905966 ------------------------------------------------------------------------*/
/* --- Tel: 86-755-82948412 ------------------------------------------------------------------------*/
/* --- Web: www.STCMCU.com -------------------------------------------------------------------------*/
/* If you want to use the program or the program referenced in the  ----------------------------*/
/* article, please specify in which data and procedures from STC    ----------------------------*/
/*---- In Keil C development environment, select the Intel 8052 to compiling ------------------*/
/*----  And only contain < reg51.h > as header file ---------------------------------------------*/
/*---------------------------------------------------------------------------------------------------*/

//suppose the frequency of test chip is 18.432MHz

INT_CLKO    DATA    08FH                        //External interrupt control register

//---------------------------------------
            ORG     0000H
            LJMP    MAIN

            ORG     0083H                       //INT4, interrupt 4 (location at 0083H)
            LJMP    EXINT4
//---------------------------------------
            ORG     0100H
MAIN:
            MOV     SP,         #3FH

            ORL     INT_CLKO,       #40H        //(EX4 = 1), enable INT4 interrupt

            SETB    EA

            SJMP    $
//---------------------------------------
//External Interrupt Service Routine

EXINT4:
            CPL     P1.0

//          ANL     INT_CLKO,       #0BFH

//          ORL     INT_CLKO,       #40H

            RETI
;---------------------------------------
            END
```

STC MCU Limited.

6.10.6 Demo Program using T0 to expand External Interrupt (Falling) —— T0 as Counter (C and ASM)

1.C Program Listing

```
/*---------------------------------------------------------------------------------------------------*/
/* --- STC MCU  Limited. ---------------------------------------------------------------------------*/
/* --- Exam Program using T0 to extend external interrupt (falling edge) ---------------------------*/
/* --- Mobile: (86)13922805190 ---------------------------------------------------------------------*/
/* --- Fax: 86-755-82905966 ------------------------------------------------------------------------*/
/* --- Tel: 86-755-82948412 ------------------------------------------------------------------------*/
/* --- Web: www.STCMCU.com -------------------------------------------------------------------------*/
/* If you want to use the program or the program referenced in the  ----------------------------*/
/* article, please specify in which data and procedures from STC    ----------------------------*/
/*---- In Keil C development environment, select the Intel 8052 to compiling ---------------------*/
/*----  And only contain < reg51.h > as header file ----------------------------------------------*/
/*---------------------------------------------------------------------------------------------------*/

//suppose the frequency of test chip is 18.432MHz

#include "reg51.h"
#include "intrins.h"

//-----------------------------------------------

sfr     AUXR    =   0x8e;              //Auxiliary register
sbit    P10     =   P1^0;

//-----------------------------------------------
//Timer 0 Interrupt Service Routine
void t0int() interrupt 1                //Timer 0 interrupt, location at 000BH
{
        P10     =   !P10;
}

void main()
{
        AUXR    =   0x80;               //T0 in 1T mode
        TMOD    =   0x04;               //T0 as external counter
                                        //and T0 in 16-bit auto-relaod mode
        TH0 = TL0 = 0xff;               //Set the initial value of T0
        TR0     =   1;                  //start up T0
        ET0     =   1;                  //Enable T0 interrupt

        EA      =   1;

        while (1);
}
```

STC MCU Limited.

2.Assembler Listing

```
/*---------------------------------------------------------------------------------------------------*/
/* --- STC MCU  Limited. ---------------------------------------------------------------------------*/
/* --- Exam Program using T0 to extend external interrupt (falling edge) ---------------------------*/
/* --- Mobile: (86)13922805190 ---------------------------------------------------------------------*/
/* --- Fax: 86-755-82905966 ------------------------------------------------------------------------*/
/* --- Tel: 86-755-82948412 ------------------------------------------------------------------------*/
/* --- Web: www.STCMCU.com -------------------------------------------------------------------------*/
/* If you want to use the program or the program referenced in the  ----------------------------*/
/* article, please specify in which data and procedures from STC    ----------------------------*/
/*---- In Keil C development environment, select the Intel 8052 to compiling ----------------*/
/*----  And only contain < reg51.h > as header file ------------------------------------------*/
/*---------------------------------------------------------------------------------------------------*/

//suppose the frequency of test chip is 18.432MHz

AUXR    DATA  08EH                    //Auxiliary register
//---------------------------------------

        ORG   0000H
        LJMP  MAIN

        ORG   000BH                   //Timer 0 interrupt, location at 000BH
        LJMP  T0INT
//---------------------------------------

        ORG   0100H
MAIN:
        MOV   SP,     #3FH

        MOV   AUXR,   #80H            /T0 in 1T mode
        MOV   TMOD,   #04H            //T0 as external counter
                                      //and T0 in 16-bit auto-relaod mode
        MOV   A,      #0FFH           //Set the initial value of T0
        MOV   TL0,    A
        MOV   TH0,    A
        SETB  TR0                     //start up T0
        SETB  ET0                     //Enable T0 interrupt

        SETB  EA

        SJMP  $

//---------------------------------------
//Timer 0 interrupt service routine

T0INT:
        CPL   P1.0
        RETI
;---------------------------------------
        END
```

STC MCU Limited.

6.10.7 Demo Program using T1 to expand External Interrupt (Falling) —— T1 as Counter (C and ASM)

1.C Program Listing

```
/*---------------------------------------------------------------------------------------------------*/
/* --- STC MCU  Limited. ---------------------------------------------------------------------------*/
/* --- Exam Program using T1 to extend external interrupt (falling edge) ---------------------------*/
/* --- Mobile: (86)13922805190 ---------------------------------------------------------------------*/
/* --- Fax: 86-755-82905966 ------------------------------------------------------------------------*/
/* --- Tel: 86-755-82948412 ------------------------------------------------------------------------*/
/* --- Web: www.STCMCU.com -------------------------------------------------------------------------*/
/* If you want to use the program or the program referenced in the  ----------------------------*/
/* article, please specify in which data and procedures from STC    ----------------------------*/
/*---- In Keil C development environment, select the Intel 8052 to compiling ---------------------*/
/*----  And only contain < reg51.h > as header file ----------------------------------------------*/
/*---------------------------------------------------------------------------------------------------*/

//suppose the frequency of test chip is 18.432MHz

#include "reg51.h"
#include "intrins.h"

//-----------------------------------------

sfr     AUXR    =       0x8e;           //Auxiliary register
sbit    P10     =       P1^0;

//-----------------------------------------
//Timer 1 Interrupt Service Routine
void t1int() interrupt 3                //Timer 1 interrupt, location at 001BH
{
        P10     =       !P10;
}

void main()
{
        AUXR    =       0x40;           //T1 in 1T mode
        TMOD    =       0x40;           //T1 as external counter
                                        //and T1 in 16-bit auto-relaod mode
        TH1 = TL1 =     0xff;           //Set the initial value of T1
        TR1     =       1;              //start up T1
        ET1     =       1;              //Enable T1 interrupt

        EA      =        1;

        while (1);
}
```

STC MCU Limited.

2.Assembler Listing

```
/*---------------------------------------------------------------------------------------------------*/
/* --- STC MCU  Limited. ---------------------------------------------------------------------------*/
/* --- Exam Program using T1 to extend external interrupt (falling edge) ---------------------------*/
/* --- Mobile: (86)13922805190 ---------------------------------------------------------------------*/
/* --- Fax: 86-755-82905966 ------------------------------------------------------------------------*/
/* --- Tel: 86-755-82948412 ------------------------------------------------------------------------*/
/* --- Web: www.STCMCU.com -------------------------------------------------------------------------*/
/* If you want to use the program or the program referenced in the  ----------------------------*/
/* article, please specify in which data and procedures from STC    ----------------------------*/
/*---- In Keil C development environment, select the Intel 8052 to compiling ----------------*/
/*----  And only contain < reg51.h > as header file ------------------------------------------*/
/*---------------------------------------------------------------------------------------------------*/

//suppose the frequency of test chip is 18.432MHz

AUXR    DATA   08EH                  //Auxiliary register
//---------------------------------------

        ORG    0000H
        LJMP   MAIN

        ORG    001BH                 //Timer 1 interrupt, location at 001BH
        LJMP   T1INT
//---------------------------------------

        ORG    0100H
MAIN:
        MOV    SP,     #3FH

        MOV    AUXR,   #40H          //T1 in 1T mode
        MOV    TMOD,   #40H          //T1 as external counter
                                     //and T1 in 16-bit auto-relaod mode
        MOV    A,      #0FFH         //Set the initial value of T1
        MOV    TL1,    A
        MOV    TH1,    A
        SETB   TR1                   //start up T1
        SETB   ET1                   //Enable T1 interrupt

        SETB   EA

        SJMP   $

//---------------------------------------
//Timer 1 Interrupt Service Routine

T1INT:
        CPL    P1.0
RETI
;---------------------------------------
        END
```

STC MCU Limited.

6.10.8 Demo Program using T2 to expand External Interrupt (Falling) —— T2 as Counter (C and ASM)

1.C Program Listing

```
/*---------------------------------------------------------------------------------------------------*/
/* --- STC MCU Limited. ----------------------------------------------------------------------------*/
/* --- Exam Program using T2 to extend external interrupt (falling edge) ---------------------------*/
/* --- Mobile: (86)13922805190 ---------------------------------------------------------------------*/
/* --- Fax: 86-755-82905966 ------------------------------------------------------------------------*/
/* --- Tel: 86-755-82948412 ------------------------------------------------------------------------*/
/* --- Web: www.STCMCU.com -------------------------------------------------------------------------*/
/* If you want to use the program or the program referenced in the  ----------------------------*/
/* article, please specify in which data and procedures from STC    ----------------------------*/
/*---- In Keil C development environment, select the Intel 8052 to compiling ------------------*/
/*----  And only contain < reg51.h > as header file ---------------------------------------------*/
/*---------------------------------------------------------------------------------------------------*/

//suppose the frequency of test chip is 18.432MHz

#include "reg51.h"
#include "intrins.h"

//-----------------------------------------
sfr     IE2     =   0xaf;                   //Interrupt enable register 2
sfr     AUXR    =   0x8e;                   //Auxiliary register
sfr     T2H     =   0xD6;
sfr     T2L     =   0xD7;

sbit    P10     =   P1^0;

//-----------------------------------------
//Timer 2 Interrupt Service Routine
void t2int() interrupt 12                   //Timer 2 interrupt, location at 0063H
{
        P10     =   !P10;

//      IE2     &=  ~0x04;

//      IE2     |=  0x04;
}

void main()
{
        AUXR    |=  0x04;                   //T2 in 1T mode
```

STC MCU Limited.

```
    AUXR        |=      0x08;           //T2_C/T=1, T2(P3.1) as Clock Source
    T2H  = T2L  =       0xff;           //Set the initial value of T2
    AUXR        |=      0x10;           //start up T2

    IE2     |=      0x04;               //Enable T2 interrupt

    EA      =       1;

    while (1);
}
```

2.Assembler Listing

STC MCU Limited.

```
/*---------------------------------------------------------------------------------------------------*/
/* --- STC MCU  Limited. ---------------------------------------------------------------------------*/
/* --- Exam Program using T2 to extend external interrupt (falling edge) ---------------------------*/
/* --- Mobile: (86)13922805190 ----------------------------------------------------------------------*/
/* --- Fax: 86-755-82905966 -------------------------------------------------------------------------*/
/* --- Tel: 86-755-82948412 -------------------------------------------------------------------------*/
/* --- Web: www.STCMCU.com --------------------------------------------------------------------------*/
/* If you want to use the program or the program referenced in the  -----------------------------*/
/* article, please specify in which data and procedures from STC    -----------------------------*/
/*---- In Keil C development environment, select the Intel 8052 to compiling ----------------*/
/*----  And only contain < reg51.h > as header file ------------------------------------------*/
/*---------------------------------------------------------------------------------------------------*/

//suppose the frequency of test chip is 18.432MHz

IE2     DATA    0AFH                    //Interrupt enable register 2
AUXR    DATA    08EH                    //Auxiliary register
T2H     DATA    0D6H
T2L     DATA    0D7H

//----------------------------------------

        ORG     0000H
        LJMP    MAIN

        ORG     0063H                   //Timer 2 interrupt, location at 0063H
        LJMP    T2INT
//----------------------------------------

        ORG     0100H
```

```
MAIN:
        MOV     SP,     #3FH

        ORL     AUXR,   #04H            //T2 in 1T mode
        ORL     AUXR,   #08H            //T2_C/T=1, T2(P3.1) as Clock Source

        MOV     A,      #0FFH           //Set the initial value of T2
        MOV     T2L,    A
        MOV     T2H,    A

        ORL     AUXR,   #10H            //start up T2

        ORL     IE2,    #04H            //Enable T2 interrupt

        SETB    EA

        SJMP    $
//---------------------------------------
//Timer 2 Interrupt Service Routine

T2INT:
        CPL     P1.0

//      ANL     IE2,    #0FBH

//      ORL     IE2,    #04H

        RETI

;---------------------------------------

        END
```

STC MCU Limited.

6.10.9 Demo Program using CCP/PCA to expand External Interrupt

1.C Program Listing

```
/*---------------------------------------------------------------------------------------------------*/
/* --- STC MCU Limited. ----------------------------------------------------------------------------*/
/* --- Exam Program using CCP/PCA to extend external interrupt (falling edge) ----------------------*/
/* --- Mobile: (86)13922805190 ---------------------------------------------------------------------*/
/* --- Fax: 86-755-82905966 ------------------------------------------------------------------------*/
/* --- Tel: 86-755-82948412 ------------------------------------------------------------------------*/
/* --- Web: www.STCMCU.com -------------------------------------------------------------------------*/
/* If you want to use the program or the program referenced in the -----------------------------*/
/* article, please specify in which data and procedures from STC -------------------------------*/
/*---- In Keil C development environment, select the Intel 8052 to compiling ---------------------*/
/*----  And only contain < reg51.h > as header file ----------------------------------------------*/
/*---------------------------------------------------------------------------------------------------*/

//suppose the frequency of test chip is 18.432MHz

//This demo program take CCP/PCA module 0 for example. the use of CCP/PCA module 1 and CCP/PCA module
//2 are same as CCP/PCA module 0

#include "reg51.h"
#include "intrins.h"

#define FOSC    18432000L

typedef   unsigned char   BYTE;
typedef   unsigned int    WORD;
typedef   unsigned long   DWORD;

sfr       P_SW1   =   0xA2;                   //Peripheral Function Switch register 1

#define   CCP_S0          0x10                //P_SW1.4
#define   CCP_S1          0x20                //P_SW1.5

sfr       CCON    =   0xD8;                   //PCA Control Register
sbit      CCF0    =   CCON^0;                 //the interrupt request flag of PCA module 0
sbit      CCF1    =   CCON^1;                 //the interrupt request flag of PCA module 1
sbit      CR      =   CCON^6;                 //the run bit of PCA timer
sbit      CF      =   CCON^7;                 //the overflow flag of PCA timer
sfr       CMOD    =   0xD9;                   //PCA Mode register
sfr       CL      =   0xE9;
sfr       CH      =   0xF9;
sfr       CCAPM0      =   0xDA;
sfr       CCAP0L      =   0xEA;
sfr       CCAP0H      =   0xFA;
sfr       CCAPM1      =   0xDB;
sfr       CCAP1L      =   0xEB;
sfr       CCAP1H      =   0xFB;
sfr       CCAPM2      =   0xDC;
sfr       CCAP2L      =   0xEC;
```

STC MCU Limited.

```
sfr     CCAP2H          =       0xFC;

sfr     PCAPWM0         =       0xf2;
sfr     PCAPWM1         =       0xf3;
sfr     PCA_    PWM2    =       0xf4;

sbit    PCA_LED         =       P1^0;           //PCA test LED

void PCA_isr() interrupt 7 using 1
{
        CCF0 = 0;                               //clear the interrupt request flag
        PCA_LED = !PCA_LED;
}

void main()
{
        ACC     =       P_SW1;
        ACC     &=      ~(CCP_S0 | CCP_S1);  //CCP_S0=0 CCP_S1=0
        P_SW1   =       ACC;                    //(P1.2/ECI, P1.1/CCP0, P1.0/CCP1, P3.7/CCP2)

//      ACC     =       P_SW1;
//      ACC     &=      ~(CCP_S0 | CCP_S1);     //CCP_S0=1 CCP_S1=0
//      ACC     |=      CCP_S0;          //(P3.4/ECI_2, P3.5/CCP0_2, P3.6/CCP1_2, P3.7/CCP2_2)
//      P_SW1   =       ACC;
//
//      ACC     =       P_SW1;
//      ACC     &=      ~(CCP_S0 | CCP_S1);     //CCP_S0=0 CCP_S1=1
//      ACC     |=      CCP_S1;          //(P2.4/ECI_3, P2.5/CCP0_3, P2.6/CCP1_3, P2.7/CCP2_3)
//      P_SW1   =       ACC;

        CCON    =        0;                     //Initialize the PCA control register
                                                //disable PCA timer
                                                //clear CF bit
                                                //clear the interrupt request flag
        CL      =       0;                      //reset PCA timer
        CH      =       0;
        CMOD    =       0x00;

        CCAPM0          =       0x11;           //PCA module 0 can be activated on falling edge
//      CCAPM0          =       0x21;           //PCA module 0 can be activated on rising edge
//      CCAPM0          =       0x31;           //PCA module 0 can be activated
                                                //both on falling and rising edge

        CR      =       1;                      //run PCA timer
        EA      =       1;

        while (1);
}
```

STC MCU Limited.

2.Assembler Listing

```
/*---------------------------------------------------------------------------------------------------*/
/* --- STC MCU  Limited. ---------------------------------------------------------------------------*/
/* --- Exam Program using CCP/PCA to extend external interrupt (falling edge) ----------------------*/
/* --- Mobile: (86)13922805190 ---------------------------------------------------------------------*/
/* --- Fax: 86-755-82905966 ------------------------------------------------------------------------*/
/* --- Tel: 86-755-82948412 ------------------------------------------------------------------------*/
/* --- Web: www.STCMCU.com -------------------------------------------------------------------------*/
/* If you want to use the program or the program referenced in the  ----------------------------*/
/* article, please specify in which data and procedures from STC    ----------------------------*/
/*---- In Keil C development environment, select the Intel 8052 to compiling ----------------------*/
/*----  And only contain < reg51.h > as header file ------------------------------------------------*/
/*---------------------------------------------------------------------------------------------------*/

//suppose the frequency of test chip is 18.432MHz

//This demo program take CCP/PCA module 0 for example. the use of CCP/PCA module 1 and CCP/PCA module
//2 are same as CCP/PCA module 0

P_SW1   EQU     0A2H                    //Peripheral Function Switch register 1

CCP_S0  EQU     10H                     //P_SW1.4
CCP_S1  EQU     20H                     //P_SW1.5

CCON    EQU     0D8H                    ;PCA Control Register
CCF0    BIT     CCON.0                  ;the interrupt request flag of PCA module 0
CCF1    BIT     CCON.1                  ;the interrupt request flag of PCA module 1
CR      BIT     CCON.6                  ;the run bit of PCA timer
CF      BIT     CCON.7                  ;the overflow flag of PCA timer
CMOD    EQU     0D9H                    ;PCA Mode register
CL      EQU     0E9H
CH      EQU     0F9H
CCAPM0          EQU     0DAH
CCAP0L          EQU     0EAH
CCAP0H          EQU     0FAH
CCAPM1          EQU     0DBH
CCAP1L          EQU     0EBH
CCAP1H          EQU     0FBH
CCAPM2          EQU     0DCH
CCAP2L          EQU     0ECH
CCAP2H          EQU     0FCH
PCA_PWM0        EQU     0F2H
PCA_PWM1        EQU     0F3H
PCA_PWM2        EQU     0F4H

PCA_LED BIT     P1.0                    ;PCA test LED
;--------------------------------------
        ORG     0000H
        LJMP    MAIN

        ORG     003BH
```

STC MCU Limited

```
PCA_ISR:
        PUSH    PSW
        PUSH    ACC
CKECK_CCF0:
        JNB     CCF0,   PCA_ISR_EXIT
        CLR     CCF0                    ;clear the interrupt request flag
        CPL     PCA_LED
PCA_ISR_EXIT:
        POP     ACC
        POP     PSW
        RETI
;----------------------------------------
        ORG     0100H
MAIN:
        MOV     SP,     #5FH

        MOV     A,      P_SW1
        ANL     A,      #0CFH           //CCP_S0=0 CCP_S1=0
        MOV     P_SW1,  A               //(P1.2/ECI, P1.1/CCP0, P1.0/CCP1, P3.7/CCP2)

//      MOV     A,      P_SW1
//      ANL     A,      #0CFH           //CCP_S0=1 CCP_S1=0
//      ORL     A,      #CCP_S0         //(P3.4/ECI_2, P3.5/CCP0_2, P3.6/CCP1_2, P3.7/CCP2_2)
//      MOV     P_SW1,  A
//
//      MOV     A,      P_SW1
//      ANL     A,      #0CFH           //CCP_S0=0 CCP_S1=1
//      ORL     A,      #CCP_S1         //(P2.4/ECI_3, P2.5/CCP0_3, P2.6/CCP1_3, P2.7/CCP2_3)
//      MOV     P_SW1,  A

        MOV     CCON,   #0              ;Initialize the PCA control register
                                        ;disable PCA timer
                                        ;clear CF bit
                                        ;clear the interrupt request flag
        CLR     A                       ;
        MOV     CL,     A               ;reset PCA timer
        MOV     CH,     A               ;
        MOV     CMOD,   #00H

        MOV     CCAPM0,   #11H          ;PCA module 0 capture the falling edge of CCP0(P1.3) pin
;       MOV     CCAPM0,   #21H          ;PCA module 0 capture the rising edge of CCP0(P1.3) pin
;       MOV     CCAPM0,   #31H          ;PCA module 0 capture falling as well as
                                        ;rising edge of CCP0(P1.3) pin
;------------------------------
        SETB    CR                      ;run PCA timer
        SETB    EA

        SJMP    $
;----------------------------------------
        END
```

STC MCU Limited.

Chapter 7 Timer/Counter

There are five 16-bit Timer/Counter: T0, T1, T2, T3 and T4, which all can be as Timer or Counter. For T0 and T1 which are compatible with convertional 8051, the "Timer" or "Counter" function is selected by control bits C/$\overline{T}$ in the Special Function Register TMOD. For T2, the "Timer" or "Counter" function is selected by control bits T2_C/$\overline{T}$ in the Special Function Register AUXR. For T3, the "Timer" or "Counter" function is selected by control bits T3_C/$\overline{T}$ in the Special Function Register T4T3M. For T4, the "Timer" or "Counter" function is selected by control bits T4_C/$\overline{T}$ in the Special Function Register T4T3M. Timer counts internal system clock, and Counter counts external pulses from pins T0 or T1 or T2 or T3 or T4.

For T0, T1 and T2, the timer register (TH and TL) is incremented every 12 system clocks or every system clock depending on AUXR.7(T0x12) and AUXR.6(T1x12) and AUXR.2(T2x12) bits in the "Timer" function. In the default state, it is fully the same as the conventional 8051. In the x12 mode, the count rate equals to the system clock. For T3 and T4, the timer register (TH and TL) is incremented every 12 system clocks or every system clock depending on T4T3M.1(T3x12) and T4T3M.5(T4x12) bits in the "Timer" function.

In the "Counter" function, the register (TH and TL) is incremented in response to a 1-to-0 transition at its corresponding external input pin, T0 or T1 or T2 or T3 or T4. In this function, the external input is sampled once at the positive edge of every clock cycle. When the samples show a high in one cycle and a low in the next cycle, the count is incremented. The new count value appears in the register during at the end of the cycle following the one in which the transition was detected. Since it takes 2 machine cycles (24 system clocks) to recognize a l-to-0 transition, the maximum count rate is 1/24 of the system clock. There are no restrictions on the duty cycle of the external input signal, but to ensure that a given level is sampled at least once before it changes, it should be held for at least one full machine cycle.

In addition to the "Timer" or "Counter" selection, Timer/Counter 0 has four operating modes which are selected by bit-pairs (M1, M0) in TMOD. These four modes are mode 0 (16-bit auto-reload timer/counter), mode 1 (16-bit timer/counter), mode 2 (8-bit auto-reload timer/counter) and mode 3 (16-bit auto-reload timer/counter whose interrupt can not be disabled). And for Timer/Counter 1, Modes 0, 1, and 2 are the same as Timer/Counter 0. Mode 3 is different. the mode 3 of Timer/Counter 1 is invalid. The four operating modes are described in the following text. For T2, T3 and T4, they only have one mode : 16-bit auto-reload timer/counter. Besides as Timer/Counter, T2, T3 and T4 also can be as the baud-rate generator and programmable clock output.

The timer/counter type of STC15 series MCU are shown in following table.

Timer / Counter / MCU Type	Timer/Counter 0	Timer/Counter 1	Timer/Counter 2	Timer/Counter 3	Timer/Counter 4
STC15F101W series	√		√		
STC15W10x series	√		√		
STC15W201S series	√		√		
STC15F408AD series	√		√		
STC15W401AS series	√		√		
STC15W404S series	√	√	√		
STC15W1K16S series	√	√	√		
STC15F2K60S2 series	√	√	√		
STC15W4K32S4 series	√	√	√	√	√

√ means the corresponding series MCU have the corresponding timer/counter.

7.1 Special Function Registers about Timer/Counter

Symbol	Description	Address	Bit Address and Symbol MSB LSB								Value after Power-on or Reset
TCON	Timer Control	88H	TF1	TR1	TF0	TR0	IE1	IT1	IE0	IT0	0000 0000B
TMOD	Timer Mode	89H	GATE	C/$\overline{T}$	M1	M0	GATE	C/$\overline{T}$	M1	M0	0000 0000B
TL0	Timer Low 0	8AH									0000 0000B
TL1	Timer Low 1	8BH									0000 0000B
TH0	Timer High 0	8CH									0000 0000B
TH1	Timer High 1	8DH									0000 0000B
IE	Interrupt Enable	A8H	EA	ELVD	EADC	ES	ET1	EX1	ET0	EX0	0000 0000B
IP	Interrupt Enable 2	B8H	PPCA	PLVD	PADC	PS	PT1	PX1	PT0	PX0	0000 0000B
T2H	The high 8-bit of Timer 2 register	D6H									0000 0000B
T2L	The low 8-bit of Timer 2 register	D7H									0000 0000B
AUXR	Auxiliary register	8EH	T0x12	T1x12	UART_M0x6	T2R	T2_C/$\overline{T}$	T2x12	EXTRAM	S1ST2	0000 0001B
INT_CLKO AUXR2	External Interrupt enable and Clock Output register	8FH	-	EX4	EX3	EX2	-	T2CLKO	T1CLKO	T0CLKO	x000 x000B
T4T3M	T4 and T3 Control and Mode register	D1H	T4R	T4_C/$\overline{T}$	T4x12	T4CLKO	T3R	T3_C/$\overline{T}$	T3x12	T3CLKO	0000 0000B
T4H	The high 8-bit of Timer 4 register	D2H									0000 0000B
T4L	The low 8-bit of Timer 4 register	D3H									0000 0000B
T3H	The high 8-bit of Timer 3 register	D4H									0000 0000B
T3L	The low 8-bit of Timer 3 register	D5H									0000 0000B
IE2	Interrupt Enable register	AFH	-	ET4	ET3	ES4	ES3	ET2	ESPI	ES2	x000 0000B

STC MCU Limited.

1. TCON register: Timer/Counter Control Register (Bit-Addressable)

SFR name	Address	bit	B7	B6	B5	B4	B3	B2	B1	B0
TCON	88H	name	TF1	TR1	TF0	TR0	IE1	IT1	IE0	IT0

TF1: Timer/Counter 1 Overflow Flag. Set by hardware on Timer/Counter 1 overflow. The flag can be cleared by software but is automatically cleared by hardware when processor vectors to the Timer 1 interrupt routine.
If TF1 = 0, No Timer 1 overflow detected.
If TF1 = 1, Timer 1 has overflowed.

TR1: Timer/Counter 1 Run Control bit. Set/cleared by software to turn Timer/Counter on/off.
If TR1 = 0, Timer 1 disabled.
If TR1 = 1, Timer 1 enabled.

TF0: Timer/Counter 0 Overflow Flag. Set by hardware on Timer/Counter 0 overflow. The flag can be cleared by software but is automatically cleared by hardware when processor vectors to the Timer 0 interrupt routine.
If TF0 = 0, No Timer 0 overflow detected.
If TF0 = 1, Timer 0 has overflowed.

TR0: Timer/Counter 0 Run Control bit. Set/cleared by software to turn Timer/Counter on/off.
If TR0 = 0, Timer 0 disabled.
If TR0 = 1, Timer 0 enabled.

IE1: External Interrupt 1 request flag. Set by hardware when external interrupt rising or falling edge defined by IT1 is detected. The flag can be cleared by software but is automatically cleared when the external interrupt 1 service routine has been processed.

IT1 : External Intenupt 1 Type Select bit. Set/cleared by software to specify rising / falling edges triggered external interrupt 1.
If IT1 = 0, INT1 is both rising and falling edges triggered.
If IT1 = 1, INT1 is only falling edge triggered.

IE0 : External Interrupt 0 request flag. Set by hardware when external interrupt rising or falling edge defined by IT0 is detected. The flag can be cleared by software but is automatically cleared when the external interrupt 1 service routine has been processed.

IT0 : External Intenupt 0 Type Select bit. Set/cleared by software to specify rising / falling edges triggered external interrupt 0.
If IT0 = 0, INT0 is both rising and falling edges triggered.
If IT0 = 1, INT0 is only falling edge triggered.

STC MCU Limited.

2. TMOD register: Timer/Counter Mode Register

TMOD address: 89H (Non bit-addressable)

GATR / TMOD.7 : Timer/Counter Gate Control.

If GATE / TMOD.7 = 0, Timer/Counter 1 enabled when TR1 is set irrespective INT1 of logic level;

If GATE / TMOD.7 = 1, Timer/Counter 1 enabled only when TR1 is set AND INT1 pin is high.

C/$\overline{T}$ / TMOD.6 : Timer/Counter 1 Select bit.

If C/$\overline{T}$ / TMOD.6 = 0, Timer/Counter 1 is set for Timer operation (input from internal system clock);

If C/$\overline{T}$ / TMOD.6 = 1, Timer/Counter 1 is set for Counter operation (input from external T1 pin).

M1 / TMOD.5 ~ M0 / TMOD.4 : Timer 1 Mode Select bits.

M1	M0	Operating Mode
0	0	Mode 0: 16-bit auto-reload Timer/Counter for T1
0	1	Mode 1: 16-bit Timer/Counter. TH1and TL1 are cascaded; there is no prescaler.
1	0	Mode 2: 8-bit auto-reload Timer/Counter. TH1 holds a value which is to be reloaded into TL1 each time it overflows.
1	1	Timer/Counter 1 is stopped

GATR / TMOD.3 : Timer/Counter Gate Control.

If GATE / TMOD.3 = 0, Timer/Counter 0 enabled when TR0 is set irrespective of INT0 logic level;

If GATE / TMOD.3 = 1, Timer/Counter 0 enabled only when TR0 is set AND INT0 pin is high.

C/$\overline{T}$ / TMOD.2 : Timer/Counter 0 Select bit.

If C/$\overline{T}$ / TMOD.2 = 0, Timer/Counter 0 is set for Timer operation (input from internal system clock);

If C/$\overline{T}$ / TMOD.2 = 1, Timer/Counter 0 is set for Counter operation (input from external T0 pin).

M1 / TMOD.1 ~ M0 / TMOD.0 : Timer 0 Mode Select bits.

M1	M0	Operating Mode
0	0	Mode 0: 16-bit auto-reload Timer/Counter for T0
0	1	Mode 1: 16-bit Timer/Counter. TH0 and TL0 are cascaded; there is no prescaler.
1	0	Mode 2: 8-bit auto-reload Timer/Counter. TH0 holds a value which is to be reloaded into TL0 each time it overflows.
1	1	Mode 3: 16-bit auto-reload Timer/Counter whose interrupt can not be disabled for T0.

STC MCU Limited.

3. AUXR: Auxiliary register (Non bit-addressable)

SFR name	Address	bit	B7	B6	B5	B4	B3	B2	B1	B0
AUXR	8EH	name	T0x12	T1x12	UART_M0x6	T2R	T2_C/$\overline{T}$	T2x12	EXTRAM	S1ST2

B7 - T0x12 : Timer 0 clock source bit.
- 0 : The clock source of Timer 0 is SYSclk/12. It will compatible to the traditional 8051 MCU
- 1 : The clock source of Timer 0 is SYSclk/1. It will drive the T0 faster than a traditional 8051 MCU

B6 - T1x12 : Timer 1 clock source bit.
- 0 : The clock source of Timer 1 is SYSclk/12. It will compatible to the traditional 8051 MCU
- 1 : The clock source of Timer 1 is SYSclk/1. It will drive the T0 faster than a traditional 8051 MCU

If T1 is used as the baud-rate generator of UART1, T1x12 will decide whether UART1 is 1T or 12T.

B5 - UART_M0x6 : Baud rate select bit of UART1 while it is working under Mode-0
- 0 : The baud-rate of UART in mode 0 is SYSclk/12.
- 1 : The baud-rate of UART in mode 0 is SYSclk/2.

B4 - T2R: Timer 2 Run control bit
- 0 : not run Timer 2;
- 1 : run Timer 2.

B3 - T2_C/$\overline{T}$: Counter or timer 2 selector
- 0 : as Timer (namely count on internal system clock)
- 1 : as Counter (namely count on the external pulse input from T2/P3.1)

B2 - T2x12 : Timer 2 clock source bit.
- 0 : The clock source of Timer 2 is SYSclk/12.
- 1 : The clock source of Timer 2 is SYSclk/1.

If T2 is used as the baud-rate generator of UART1 or UART2, T1x12 will decide whether UART1 or UART2 is 1T or 12T.

B1 - EXTRAM : Internal / external RAM access control bit.
- 0 : On-chip auxiliary RAM is enabled.
- 1 : On-chip auxiliary RAM is always disabled.

B0 - S1ST2 : the control bit that UART1 select Timer 2 as its baud-rate generator.
- 0 : Select Timer 1 as the baud-rate generator of UART1
- 1 : Select Timer 2 as the baud-rate generator of UART1. Timer 1 is released to use in other functions.

STC MCU Limited.

4. T0, T1 and T2 Clock Output and External Interrupt Enable register : INT_CLKO (AUXR2)

The ouput clock frequency of T0CLKO is controlled by Timer 0. The ouput clock frequency of T1CLKO is controlled by Timer 1. When they are used as programmable clcok output, Timer 0 anad Timer 1 must work in mode 0 (16-bit auto-reload timer/counter) or mode 2 (8-bit auto-reload timer/counter) and don't enable thier interrupt to avoid CPU entering interrupt repeatly unless special circumstances. The ouput clock frequency of T2CLKO is controlled by Timer 2 which only has one mode (16-bit auto-reload timer/counter). Similarly, when T2 is used as programmable clcok output, it also don't enable thier interrupt to avoid CPU entering interrupt repeatly unless special circumstances.

INT_CLKO (AUXR2) : Clock Output and External Interrupt Enable register (Non bit-Addressable)

SFR Name	SFR Address	bit	B7	B6	B5	B4	B3	B2	B1	B0
INT_CLKO AUXR2	8FH	name	-	EX4	EX3	EX2	-	T2CLKO	T1CLKO	T0CLKO

B0 - T0CLKO : Whether is P3.5/T1 configured for Timer 0(T0) programmable clock output T0CLKO or not.

1, P3.5/T1 is configured for Timer0 programmable clock output T0CLKO, the clock output frequency = T0 overflow/2

If Timer/Counter 0 in mode 0 (16 bit auto-reloadable mode),

and if $C/\overline{T}$ = 0, namely Timer/Counter 0 count of the internal system clock,

When T0 in 1T mode (AUXR.7/T0x12=1), the output frequency = (SYSclk)/(65536-[RL_TH0, RL_TL0])/2

When T0 in 12T mode (AUXR.7/T0x12=0), the output frequency = (SYSclk) /12/ (65536-[RL_TH0, RL_TL0])/2

and if $C/\overline{T}$ = 1, namely Timer/Counter 0 count on the external pulse input from P3.4/T0,

the output frequency = (T0_Pin_CLK) / (65536-[RL_TH0, RL_TL0])/2

If Timer/Counter 0 in mode 2 (8 bit auto-reloadable mode),

and if $C/\overline{T}$ = 0, namely Timer/Counter 0 count on the internal system clock,

When T0 in 1T mode(AUXR.7/T0x12=1), the output frequency = (SYSclk) / (256-TH0) / 2

When T0 in 12T mode(AUXR.7/T0x12=0), the output frequency = (SYSclk) / 12 / (256-TH0) / 2

and if $C/\overline{T}$ = 1, namely Timer/Counter 0 count on the external pulse input from P3.4/T0,

the output frequency = (T0_Pin_CLK) / (256-TH0) / 2

0, P3.5/T1 is not configure for Timer 0 programmable clock output T0CLKO

B1 - T1CLKO : Whether is P3.4/T0 configured for Timer 1(T1) programmable clock output T1CLKO or not.

1, P3.4/T0 is configured for Timer1 programmable clock output T1CLKO, the clock output frequency = T1 overflow/2

If Timer/Counter 1 in mode 1 (16 bit auto-reloadable mode),

and if $C/\overline{T}$ = 0, namely Timer/Counter 1 count on the internal system clock,

When T1 in 1T mode (AUXR.6/T1x12=1), the output frequency = (SYSclk)/(65536-[RL_TH1, RL_TL1])/2

When T1 in 12T mode (AUXR.6/T1x12=0), the output frequency = (SYSclk) /12/ (65536-[RL_TH1, RL_TL1])/2

and if $C/\overline{T}$ = 1, namely Timer/Counter 1 count on the external pulse input from P3.5/T1,

the output frequency = (T1_Pin_CLK) / (65536-[RL_TH1, RL_TL1])/2

If Timer/Counter 1 in mode 2 (8 bit auto-reloadable mode),

and if $C/\overline{T}$ = 0, namely Timer/Counter 1 count on the internal system clock,

When T1 in 1T mode(AUXR.6/T1x12=1), the output frequency = (SYSclk) / (256-TH1) / 2

When T1 in 12T mode(AUXR.6/T1x12=0), the output frequency = (SYSclk) / 12 / (256-TH1) / 2

and if $C/\overline{T}$ = 1, namely Timer/Counter 1 count on the external pulse input from P3.5/T1,

the output frequency = (T1_Pin_CLK) / (256-TH1) / 2

0, P3.4/T0 is not configure for Timer 1 programmable clock output T1CLKO

STC MCU Limited.

B2 - T2CLKO : Whether is P3.0 configured for Timer 2(T2) programmable clock output T2CLKO or not.

1, P3.0 is configured for Timer2 programmable clock output T2CLKO, the clock output frequency = T2 overflow/2

If T2_ C/$\overline{T}$ = 0, namely Timer/Counter 2 count on the internal system clock,

When T2 in 1T mode (AUXR.2/T2x12=1), the output frequency = (SYSclk)/(65536-[RL_TH2, RL_TL2])/2

When T2 in 12T mode (AUXR.2/T2x12=0), the output frequency = (SYSclk) /12/ (65536-[RL_TH2, RL_TL2])/2

If T2_C/$\overline{T}$ = 1, namely Timer/Counter 2 count on the external pulse input from P3.1/T2,

the output frequency = (T2_Pin_CLK) / (65536-[RL_TH2, RL_TL2])/2

0, P3.0 is not configure for Timer 2 programmable clock output T2CLKO

B4 - EX2 : Enable bit of External Interrupt 2($\overline{INT2}$)

If EX2 = 0, External Interrupt 2 ($\overline{INT2}$) would be diabled.

If EX2 = 1, External Interrupt 2 ($\overline{INT2}$) would be enabled.

B5 - EX3 : Enable bit of External Interrupt 3($\overline{INT3}$)

If EX3 = 0, External Interrupt 3 ($\overline{INT3}$) would be diabled.

If EX3 = 1, External Interrupt 3 ($\overline{INT3}$) would be enabled.

B6 - EX4 : Enable bit of External Interrupt 4($\overline{INT4}$)

If EX4 = 0, External Interrupt 4 ($\overline{INT4}$) would be diabled.

If EX4 = 1, External Interrupt 4 ($\overline{INT4}$) would be enabled.

External Interrupt $\overline{INT2}$, $\overline{INT3}$ and $\overline{INT4}$ all only can generate interrupt on falling edge.

STC MCU Limited.

5. Register related to T0 and T1 interrupt: IE and IP

IE: Interrupt Enable Rsgister (Bit-addressable)

SFR name	Address	bit	B7	B6	B5	B4	B3	B2	B1	B0
IE	A8H	name	EA	ELVD	EADC	ES	ET1	EX1	ET0	EX0

EA : disables all interrupts.
If EA = 0,no interrupt will be acknowledged.
If EA = 1, each interrupt source is individually enabled or disabled by setting or clearing its enable bit.

ET1: Timer 1 interrupt enable bit.
If ET1 = 0, Timer 1 interrupt would be diabled.
If ET1 = 1, Timer 1 interrupt would be enabled.

ET0: Timer 0 interrupt enable bit.
If ET0 = 0, Timer 0 interrupt would be diabled.
If ET0 = 1, Timer 0 interrupt would be enabled.

IP: Interrupt Priority Register (Bit-addressable)

SFR name	Address	bit	B7	B6	B5	B4	B3	B2	B1	B0
IP	B8H	name	PPCA	PLVD	PADC	PS	PT1	PX1	PT0	PX0

PT1 : Timer 1 interrupt priority control bit.
if PT1=0, Timer 1 interrupt is assigned lowest priority (priority 0).
if PT1=1, Timer 1 interrupt is assigned highest priority (priority 1).

PT0 : Timer 0 interrupt priority control bit.
if PT0=0, Timer 0 interrupt is assigned lowest priority (priority 0).
if PT0=1, Timer 0 interrupt is assigned highest priority (priority 1).

STC MCU Limited.

6. T4T3M : Timer 4 and Timer 3 Mode register (Non bit-addressable)

SFR name	Address	bit	B7	B6	B5	B4	B3	B2	B1	B0
T4T3M	D1H	name	T4R	T4_C/$\overline{T}$	T4x12	T4CLKO	T3R	T3_C/$\overline{T}$	T3x12	T3CLKO

B7 - T4R： Timer 4 Run control bit
0 ： not run Timer 4;
1 ： run Timer 4.

B6 - T4_C/$\overline{T}$: Counter or timer 4 selector
0 ： as Timer (namely count on internal system clock)
1 ： as Counter (namely count on the external pulse input from T4/P0.7)

B5 - T4x12 : Timer 4 clock source bit.
0 ： The clock source of Timer 4 is SYSclk/12.
1 ： The clock source of Timer 4 is SYSclk/1.

B4 - T4CLKO : Whether is P0.6 configured for Timer 4(T4) programmable clock output T4CLKO or not.

1, P0.6 is configured for Timer 4 programmable clock output T4CLKO, the clock output frequency = T4 overflow/2
If T4_ C/$\overline{T}$ = 0, namely Timer/Counter 4 count on the internal system clock,
When T4 in 1T mode (T4T3.5/T4x12=1), the output frequency = (SYSclk)/(65536-[RL_TH4, RL_TL4])/2
When T4 in 12T mode (T4T3.5/T4x12=0), the output frequency = (SYSclk) /12/ (65536-[RL_TH4, RL_TL4])/2
If T4_C/$\overline{T}$ = 1, namely Timer/Counter 4 count on the external pulse input from P0.7/T4,
the output frequency = (T4_Pin_CLK) / (65536-[RL_TH4, RL_TL4])/2

0, P0.6 is not configure for Timer 4 programmable clock output T4CLKO

B3 - T3R： Timer 3 Run control bit
0 ： not run Timer 3;
1 ： run Timer 3.

B2 - T3_C/$\overline{T}$: Counter or timer 3 selector
0 ： as Timer (namely count on internal system clock)
1 ： as Counter (namely count on the external pulse input from T3/P0.5)

B1 - T3x12 : Timer 3 clock source bit.
0 ： The clock source of Timer 3 is SYSclk/12.
1 ： The clock source of Timer 3 is SYSclk/1.

B0 - T3CLKO : Whether is P0.4 configured for Timer 3(T3) programmable clock output T3CLKO or not.

1, P0.4 is configured for Timer 3 programmable clock output T3CLKO, the clock output frequency = T3 overflow / 2
If T3_ C/$\overline{T}$ = 0, namely Timer/Counter 3 count on the internal system clock,
When T3 in 1T mode (T4T3.1/T3x12=1), the output frequency = (SYSclk)/(65536-[RL_TH3, RL_TL3])/2
When T3 in 12T mode (T4T3.1/T3x12=0), the output frequency = (SYSclk) /12/ (65536-[RL_TH3, RL_TL3])/2
If T3_C/$\overline{T}$ = 1, namely Timer/Counter 3 count on the external pulse input from P0.5/T3,
the output frequency = (T3_Pin_CLK) / (65536-[RL_TH3, RL_TL3])/2

0, P0.4 is not configure for Timer 3 programmable clock output T3CLKO

STC MCU Limited.

7. T2, T3 and T4 Interrupt Enable Register : IE2

IE2: Interrupt Enable 2 Rsgister (Non bit-addressable)

SFR name	Address	bit	B7	B6	B5	B4	B3	B2	B1	B0
IE2	AFH	name	-	ET4	ET3	ES4	ES3	ET2	ESPI	ES2

ET4 : Timer 4 interrupt enable bit.
If ET4 = 0, Timer 4 interrupt would be diabled.
If ET4 = 1, Timer 4 interrupt would be enabled.

ET3 : Timer 3 interrupt enable bit.
If ET3 = 0, Timer 3 interrupt would be diabled.
If ET3 = 1, Timer 3 interrupt would be enabled.

ES4 : Serial Port 4 (UART4) interrupt enable bit.
If ES4 = 0, UART4 interrupt would be diabled.
If ES4 = 1, UART4 interrupt would be enabled.

ES3 : Serial Port 3 (UART3) interrupt enable bit.
If ES3 = 0, UART3 interrupt would be diabled.
If ES3 = 1, UART3 interrupt would be enabled.

ET2 : Timer 2 interrupt enable bit.
If ET2 = 0, Timer 2 interrupt would be diabled.
If ET2 = 1, Timer 2 interrupt would be enabled.

ESPI: SPI interrupt enalbe bit.
If ESPI = 0, SPI interrupt would be diabled.
If ESPI = 1, SPI interrupt would be enabled.

ES2 : Serial Port 2 (UART2) interrupt enable bit.
If ES2 = 0, UART2 interrupt would be diabled.
If ES2 = 1, UART2 interrupt would be enabled.

STC MCU Limited.

7.2 Timer/Counter 0 Modes

Timer/Counter 0 can be configured for four modes by setting M1(TMOD.1) and M0(TMOD.0) in sepcial function register TMOD.

7.2.1 Mode 0 (16-Bit Auto-Relaod Timer/Counter) and Demo Program

In this mode, the timer/counter 0 is configured as a 16-bit auto-reload timer/counter, which is shown below.

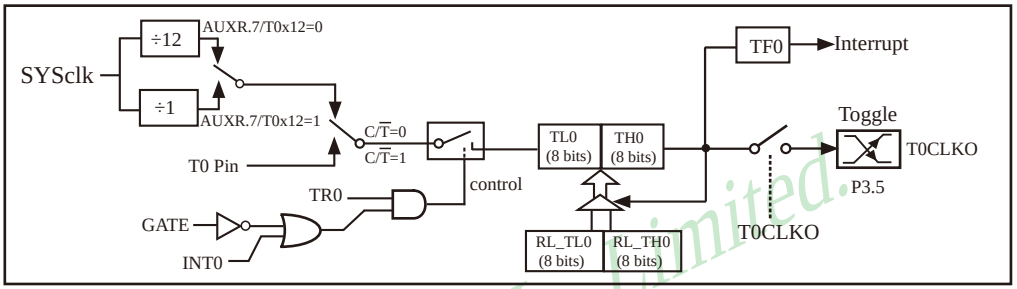

Timer/Counter 0 Mode 0: 16-Bit Auto-Relaod Timer/Counter

The counted input is enabled to the timer when TR0 = 1 and either GATE = 0 or INT0 = 1.(Setting GATE = 1 allows the Timer to be controlled by external input INT0, to facilitate pulse width measurements.) TR0 is a control bit in the Special Function Register TCON. GATE is in TMOD. There are two different GATE bits. one for Timer 1 (TMOD.7) and one for Timer 0 (TMOD.3).

If $C/\overline{T}$ / TMOD.2 = 0, Timer/Counter 0 would be set for Timer operation (input from internal system clock). However, if $C/\overline{T}$ / TMOD.2 = 1, Timer/Counter 0 would be set for Counter operation (input from external T0/P3.4 pin).

In the “Timer” function, the timer register [TL0, TH0] is incremented every 12 system clocks or every system clock depending on AUXR.7(T0x12) bit. If T0x12 = 0, the register [TL0, TH0] will be incremented every 12 system clocks.If T0x12 = 1, the register [TL0, TH0] will be incremented every system clock.

There are two hidden registers RL_TH0 and RL_TL0 for Timer/Counter 0. the address of RL_TH0 is the same as TH0's. And, RL_TL0 and TL0 share in the same address. When TR0 = 0 disable Timer/Counter 0, the content written into register [TL0, TH0] will be written into [RL_TL0, RL_TH0] too. When TR0 = 1 enable Timer/Counter 0, the content written into register [TL0, TH0] actually don not be writen into [TL0, TH0], but into [RL_TL0, RL_TH0]. When users read the content of [TL0, TH0], it is the content of [TL0, TH0] to read instead of [RL_TL0, RL_TH0].

When Timer/Counter 0 work in mode 0(TMOD[1:0]/[M1,M0]=00B), overflow from [TL0, TH0] will not only set TF0, but also reload [TL0, TH0] with the content of [RL_TL0, RL_TH0], which is preset by software. The reload leaves [RL_TL0, RL_TH0] unchanged.

STC MCU Limited.

When T0CLKO/INT_CLKO.0=1, P3.5/T1 is configured for Timer0 programmable clock output T0CLKO.

The clock output frequency = T0 overflow/2

If Timer/Counter 0 in mode 0 (16 bit auto-reloadable mode),

and if $C/\overline{T}$ = 0, namely Timer/Counter 0 count on the internal system clock,

When T0 in 1T mode (AUXR.7/T0x12=1), the output frequency = (SYSclk)/(65536-[RL_TH0, RL_TL0])/2

When T0 in 12T mode (AUXR.7/T0x12=0), the output frequency = (SYSclk) /12/ (65536-[RL_TH0, RL_TL0])/2

and if $C/\overline{T}$ = 1, namely Timer/Counter 0 count on the external pulse input from P3.4/T0,

the output frequency = (T0_Pin_CLK) / (65536-[RL_TH0, RL_TL0])/2

RL_TH0 is the reloaded register of **TH0, RL_TL0** is the reload register of TL0.

7.2.1.1 Demo Program of 16-bit Auto-Reload Timer/Counter 0 (C and ASM)

1.C Program Listing

```
/*-------------------------------------------------------------------------------------------------*/
/* --- STC MCU  Limited. ---------------------------------------------------------------------------*/
/* --- Exam Program of 16-bit auto-reload timer/counter 0 ------------------------------------------*/
/* --- Mobile: (86)13922805190 ---------------------------------------------------------------------*/
/* --- Fax: 86-755-82905966 ------------------------------------------------------------------------*/
/* --- Tel: 86-755-82948412 ------------------------------------------------------------------------*/
/* --- Web: www.STCMCU.com -------------------------------------------------------------------------*/
/* If you want to use the program or the program referenced in the  ----------------------------*/
/* article, please specify in which data and procedures from STC    ----------------------------*/
/*---- In Keil C development environment, select the Intel 8052 to compiling ----------------*/
/*----  And only contain < reg51.h > as header file ------------------------------------------*/
/*-------------------------------------------------------------------------------------------------*/

//suppose the frequency of test chip is 18.432MHz

#include "reg51.h"

typedef unsigned char   BYTE;
typedef unsigned int    WORD;

//-----------------------------------------

#define  FOSC    18432000L

#define  T1MS    (65536-FOSC/1000)          //1T mode, 18.432KHz
//#define T1MS    (65536-FOSC/12/1000)       //12T mode, 18.432KHz

sfr      AUXR    =       0x8e;              //Auxiliary register
sbit     P10     =       P1^0;

//-----------------------------------------
```

STC MCU Limited.

```
/* Timer0 interrupt routine */
void tm0_isr() interrupt 1 using 1
{
        P10     =       ! P10;
}

//-----------------------------------------------

/* main program */
void main()
{
        AUXR    |=      0x80;           //T0 in 1T mode
//      AUXR    &=      0x7f;           //T0 in 12T mode

        TMOD    =       0x00;           //set T0 as 16-bit auto-reload timer/counter
        TL0     =       T1MS;           //initialize the timing value
        TH0     =       T1MS >> 8;
        TR0     =       1;              //run T0
        ET0     =       1;              //Enable T0 interrupt
        EA      =       1;

        while (1);
}
```

STC MCU Limited.

2. Assembler Listing

```
/*-------------------------------------------------------------------------------------------------*/
/* --- STC MCU  Limited. ---------------------------------------------------------------------*/
/* --- Exam Program of 16-bit auto-reload timer/counter 0 ------------------------------------*/
/* --- Mobile: (86)13922805190 ---------------------------------------------------------------*/
/* --- Fax: 86-755-82905966 ------------------------------------------------------------------*/
/* --- Tel: 86-755-82948412 ------------------------------------------------------------------*/
/* --- Web: www.STCMCU.com -------------------------------------------------------------------*/
/* If you want to use the program or the program referenced in the  ----------------------------*/
/* article, please specify in which data and procedures from STC    ----------------------------*/
/*---- In Keil C development environment, select the Intel 8052 to compiling ------------------*/
/*----  And only contain < reg51.h > as header file ---------------------------------------------*/
/*-------------------------------------------------------------------------------------------------*/

//suppose the frequency of test chip is 18.432MHz


AUXR    DATA    08EH                    //Auxiliary register

;-----------------------------------------------

T1MS    EQU     0B800H          //1T mode, the timing value of 1ms is (65536-18432000/1000)
//T1MS  EQU     0FA00H          //12Tmode, the timing value of 1ms is (65536-18432000/1000/12)
```

```
;-----------------------------------------------

        ORG     0000H
        LJMP    MAIN

        ORG     000BH                   //interrupt entrance
        LJMP    T0INT

;-----------------------------------------------

        ORG     0100H
MAIN:
        MOV     SP,     #3FH

        ORL     AUXR,   #80H            //T0 in 1T mode
//      ANL     AUXR,   #7FH            //T0 in 12T mode

        MOV     TMOD,   #00H            //set T0 as 16-bit auto-reload timer/counter

        MOV     TL0,    #LOW T1MS       //initialize the timing value
        MOV     TH0,    #HIGH T1MS
        SETB    TR0
        SETB    ET0                     //Enable T0 interrupt

        SETB    EA

        SJMP    $

//----------------------------------------
//Timer0 interrupt routine

T0INT:
        CPL     P1.0
        RETI

;----------------------------------------

        END
```

STC MCU Limited.

7.2.1.2 Demo Program of T0 Programmable Clock Output (C and ASM)

—— T0 as 16-bit Auto-Reload Timer/Counter

The following is the example program that Timer 0 output programmable clock by dividing the frequency of internal system clock or the clock input from external pin T0/P3.4 (C and assembly):

1. C Program Listing

```
/*---------------------------------------------------------------------------------------------------*/
/* --- STC MCU  Limited. ---------------------------------------------------------------------------*/
/* --- Exam Program of Timer 0 porgrammable clock output -------------------------------------------*/
/* --- Mobile: (86)13922805190 ---------------------------------------------------------------------*/
/* --- Fax: 86-755-82905966 ------------------------------------------------------------------------*/
/* --- Tel: 86-755-82948412 ------------------------------------------------------------------------*/
/* --- Web: www.STCMCU.com -------------------------------------------------------------------------*/
/* If you want to use the program or the program referenced in the  ----------------------------*/
/* article, please specify in which data and procedures from STC    ----------------------------*/
/*---- In Keil C development environment, select the Intel 8052 to compiling ----------------*/
/*----  And only contain < reg51.h > as header file ------------------------------------------*/
/*---------------------------------------------------------------------------------------------------*/

//suppose the frequency of test chip is 18.432MHz

#include "reg51.h"

typedef unsigned char BYTE;
typedef unsigned int WORD;

#define FOSC 18432000L

//-----------------------------------------------
sfr         AUXR            =       0x8e;
sfr         INT_CLKO        =       0x8f;

sbit        T0CLKO          =       P3^5;

#define     F38_4KHz        (65536-FOSC/2/38400)                    //1T Mode
//#define   F38_4KHz        (65536-FOSC/2/12/38400)                 //12T Mode
//-----------------------------------------------
void main()
{
            AUXR    |=      0x80;                   //Timer 0 in 1T mode
//          AUXR    &=      ~0x80;                  //Timer 0 in 12T mode

            TMOD    =       0x00;                   //set Timer0 in mode 0(16 bit auto-reloadable mode)
```

STC MCU Limited.

```
        TMOD    &=      ~0x04;                  //C/T0=0, count on internal system clock
//      TMOD    |=      0x04;                   //C/T0=1, count on external pulse input from T0 pin

        TL0     =       F38_4KHz;               //Initial timing value
        TH0     =       F38_4KHz >> 8;
        TR0     =       1;
        INT_CLKO        =       0x01;

        while (1);
}
```

2. Assembler Listing

```
/*-------------------------------------------------------------------------------------------------*/
/* --- STC MCU  Limited. ---------------------------------------------------------------------*/
/* --- Exam Program of Timer 0 porgrammable clock output -------------------------------------*/
/* --- Mobile: (86)13922805190 ---------------------------------------------------------------*/
/* --- Fax: 86-755-82905966 ------------------------------------------------------------------*/
/* --- Tel: 86-755-82948412 ------------------------------------------------------------------*/
/* --- Web: www.STCMCU.com -------------------------------------------------------------------*/
/* If you want to use the program or the program referenced in the  ----------------------------*/
/* article, please specify in which data and procedures from STC    ----------------------------*/
/*---- In Keil C development environment, select the Intel 8052 to compiling ------------------*/
/*----  And only contain < reg51.h > as header file ---------------------------------------------*/
/*-------------------------------------------------------------------------------------------------*/

//suppose the frequency of test chip is 18.432MHz

AUXR            DATA    08EH
INT_CLKO        DATA    08FH

T0CLKO          BIT     P3.5

F38_4KHz        EQU     0FF10H          //38.4KHz(1T mode, 65536-18432000/2/38400)
//F38_4KHz      EQU     0FFECH          //38.4KHz(12T mode,(65536-18432000/2/12/38400)
//-----------------------------------------------

        ORG     0000H
        LJMP    MAIN

//-----------------------------------------
```

STC MCU Limited.

```
        ORG     0100H
MAIN:
        MOV     SP,     #3FH

        ORL     AUXR,   #80H                    //Timer 0 in 1T mode
//      ANL     AUXR,   #7FH                    //Timer 0 in 12T mode

        MOV     TMOD,   #00H                    //set Timer0 in mode 0(16 bit auto-reloadable mode)

        ANL     TMOD,   #0FBH                   //C/T0=0, count on internal system clock
//      ORL     TMOD,   #04H                    //C/T0=1, count on external pulse input from T0 pin

        MOV     TL0,    #LOW F38_4KHz           //Initial timing value
        MOV     TH0,    #HIGH F38_4KHz
        SETB    TR0
        MOV     INT_CLKO,       #01H

        SJMP    $

;-------------------------------------------------

        END
```

STC MCU Limited.

7.2.1.3 Demo Program using 16-bit auto-reload Timer 0 to Simulate 10 or 16 bits PWM

1. C Program Listing

```
/*---------------------------------------------------------------------------------------------------------*/
/* --- STC MCU  Limited. ---------------------------------------------------------------------------------*/
/* --- Exam Program using 16-bit auto-reload timer/counter to simulate 10 or 16 bits PWM -*/
/* --- Mobile: (86)13922805190 ---------------------------------------------------------------------------*/
/* --- Fax: 86-755-82905966 ------------------------------------------------------------------------------*/
/* --- Tel: 86-755-82948412 ------------------------------------------------------------------------------*/
/* --- Web: www.STCMCU.com -------------------------------------------------------------------------------*/
/* If you want to use the program or the program referenced in the  ----------------------------*/
/* article, please specify in which data and procedures from STC    ----------------------------*/
/*---- In Keil C development environment, select the Intel 8052 to compiling ------------------*/
/*----  And only contain < reg51.h > as header file ------------------------------------------------*/
/*---------------------------------------------------------------------------------------------------------*/

//suppose the frequency of test chip is 18.432MHz

#include "reg51.h"

//#define  PWM6BIT        64                      //6-bit PWM periodicity
#define   PWM8BIT        256                     //8-bit PWM periodicity
//#define  PWM10BIT       1024                    //10-bit PWM periodicity
//#define  PWM16BIT       65536                   //16-bit PWM periodicity

#define   HIGHDUTY       64                      // high duty (duty ratio 64/256=25%)
#define   LOWDUTY        (PWM8BIT-HIGHDUTY)      //low duty

sfr       AUXR           =       0x8e;           //Auxiliary register
sfr       INT_CLKO       =       0x8f;           //Clock Output register
sbit      T0CLKO         =       P3^5;           //T0 Clock Output

bit       flag;

// Timer 0 interrupt service routine
void tm0() interrupt 1
{
        flag = !flag;
        if (flag)
        {
                TL0 = (65536-HIGHDUTY);
                TH0 = (65536-HIGHDUTY) >> 8;
        }
        else
        {
                TL0 = (65536-LOWDUTY);
                TH0 = (65536-LOWDUTY) >> 8;
        }
}
```

STC MCU Limited.

```
void main()
{
    AUXR    =   0x80;                   //T0 in 1T mode
    INT_CLKO    =   0x01;               //enable the function of Timer 0 Clock Output
    TMOD    &=  0xf0;                   //T0 in mode 0(16-bit auto-reload timer/counter)
    TL0     =   (65536-LOWDUTY);        //initialize the reload value
    TH0     =   (65536-LOWDUTY) >> 8;
    T0CLKO  =   1;                      //initialize the pin of clock output (soft PWM port)
    flag    =   0;
    TR0     =   1;                      //run Timer 0
    ET0     =   1;                      //enable Timer 0 interrupt
    EA      =   1;
    while (1);
}
```

STC MCU Limited.

2. Assembler Listing

```
/*---------------------------------------------------------------------------------------------------*/
/* --- STC MCU  Limited. ---------------------------------------------------------------------------*/
/* --- Exam Program using 16-bit auto-reload timer/counter to simulate 10 or 16 bits PWM -*/
/* --- Mobile: (86)13922805190 ---------------------------------------------------------------------*/
/* --- Fax: 86-755-82905966 ------------------------------------------------------------------------*/
/* --- Tel: 86-755-82948412 ------------------------------------------------------------------------*/
/* --- Web: www.STCMCU.com -------------------------------------------------------------------------*/
/* If you want to use the program or the program referenced in the  ----------------------------*/
/* article, please specify in which data and procedures from STC    ----------------------------*/
/*---- In Keil C development environment, select the Intel 8052 to compiling ------------------*/
/*----  And only contain < reg51.h > as header file ---------------------------------------------*/
/*---------------------------------------------------------------------------------------------------*/

//suppose the frequency of test chip is 18.432MHz

;PWM6BIT        EQU     64                      ;6-bit PWM periodicity
PWM8BIT         EQU     256                     ;8-bit PWM periodicity
;PWM10BIT       EQU     1024                    ;10-bit PWM periodicity
;PWM16BIT       EQU     65536                   ;16-bit PWM periodicity

HIGHDUTY        EQU     64                      ;high duty (duty ratio 64/256=25%)
LOWDUTY         EQU     (PWM8BIT-HIGHDUTY)      ;low duty

AUXR            DATA    08EH                    ;Auxiliary register
INT_CLKO        DATA    08FH                    ;Clock Output register
T0CLKO          BIT     P3.5                    ;T0 Clock Output

FLAG            BIT     20H.0

;-----------------------------------------------
```

```
        ORG     0000H
        LJMP    MAIN

        ORG     000BH
        LJMP    TM0_ISR

;-----------------------------------------------

MAIN:
        MOV     AUXR,   #80H                    ;T0 in 1T mode
        MOV     INT_CLKO,       #01H            ;enable the function of Timer 0 clock output
        ANL     TMOD,   #0F0H                   ;T0 in mode 0(16-bit auto-reload timer/counter)
        MOV     TL0,    #LOW (65536-LOWDUTY)                    ;initialize the reload value
        MOV     TH0,    #HIGH (65536-LOWDUTY)
        SETB    T0CLKO                          ;initialize the pin of clock output (soft PWM port)
        CLR     FLAG
        SETB    TR0                             ;run Timer 0
        SETB    ET0                             ;enable Timer 0 interrupt
        SETB    EA

        SJMP    $

;-----------------------------------------------
;Timer 0 interrupt service routine
TM0_ISR:
        CPL     FLAG
        JNB     FLAG,   READYLOW
READYHIGH:
        MOV     TL0,    #LOW (65536-HIGHDUTY)
        MOV     TH0,    #HIGH (65536-HIGHDUTY)
        JMP     TM0ISR_EXIT
READYLOW:
        MOV     TL0,    #LOW (65536-LOWDUTY)
        MOV     TH0,    #HIGH (65536-LOWDUTY)
TM0ISR_EXIT:
        RETI

;-----------------------------------------------

        END
```

STC MCU Limited.

7.2.1.4 Demo Program using T0 to expand External Interrupt (Falling edge)

—— T0 as 16-bit Auto-Relaod Counter (C and ASM)

1.C Program Listing

```
/*-------------------------------------------------------------------------------------------------*/
/* --- STC MCU  Limited. ---------------------------------------------------------------------------*/
/* --- Exam Program using T0 to extend external interrupt (falling edge) ---------------------*/
/* --- Mobile: (86)13922805190 ---------------------------------------------------------------------*/
/* --- Fax: 86-755-82905966 ------------------------------------------------------------------------*/
/* --- Tel: 86-755-82948412 ------------------------------------------------------------------------*/
/* --- Web: www.STCMCU.com -------------------------------------------------------------------------*/
/* If you want to use the program or the program referenced in the  ----------------------------*/
/* article, please specify in which data and procedures from STC    ----------------------------*/
/*---- In Keil C development environment, select the Intel 8052 to compiling ----------------*/
/*----  And only contain < reg51.h > as header file ------------------------------------------*/
/*-------------------------------------------------------------------------------------------------*/

//suppose the frequency of test chip is 18.432MHz

#include "reg51.h"
#include "intrins.h"

//-----------------------------------------------

sfr     AUXR    =   0x8e;              //Auxiliary register
sbit    P10     =   P1^0;

//-----------------------------------------------
//Timer 0 Interrupt Service Routine
void t0int() interrupt 1                //Timer 0 interrupt, location at 000BH
{
        P10     =       !P10;
}

void main()
{
        AUXR    =       0x80;           //T0 in 1T mode
        TMOD    =       0x04;           //T0 as external counter
                                        //and T0 in 16-bit auto-relaod mode
        TH0 = TL0 =     0xff;           //Set the initial value of T0
        TR0     =       1;              //start up T0
        ET0     =       1;              //Enable T0 interrupt

        EA      =       1;

        while (1);
}
```

STC MCU Limited.

2.Assembler Listing

```
/*---------------------------------------------------------------------------------------------------*/
/* --- STC MCU  Limited. ---------------------------------------------------------------------------*/
/* --- Exam Program using T0 to extend external interrupt (falling edge) ---------------------------*/
/* --- Mobile: (86)13922805190 ---------------------------------------------------------------------*/
/* --- Fax: 86-755-82905966 ------------------------------------------------------------------------*/
/* --- Tel: 86-755-82948412 ------------------------------------------------------------------------*/
/* --- Web: www.STCMCU.com -------------------------------------------------------------------------*/
/* If you want to use the program or the program referenced in the  ----------------------------*/
/* article, please specify in which data and procedures from STC    ----------------------------*/
/*---- In Keil C development environment, select the Intel 8052 to compiling ----------------*/
/*----  And only contain < reg51.h > as header file ------------------------------------------*/
/*---------------------------------------------------------------------------------------------------*/

//suppose the frequency of test chip is 18.432MHz

AUXR    DATA    08EH                    //Auxiliary register
//---------------------------------------

        ORG     0000H
        LJMP    MAIN

        ORG     000BH                   //Timer 0 interrupt, location at 000BH
        LJMP    T0INT
//---------------------------------------

        ORG     0100H
MAIN:
        MOV     SP,     #3FH

        MOV     AUXR,   #80H            /T0 in 1T mode
        MOV     TMOD,   #04H            //T0 as external counter
                                        //and T0 in 16-bit auto-relaod mode
        MOV     A,      #0FFH           //Set the initial value of T0
        MOV     TL0,    A
        MOV     TH0,    A
        SETB    TR0                     //start up T0
        SETB    ET0                     //Enable T0 interrupt

        SETB    EA

        SJMP    $

//---------------------------------------
//Timer 0 interrupt service routine

T0INT:
        CPL     P1.0
        RETI
;---------------------------------------
        END
```

STC MCU Limited.

7.2.2 Mode 1 (16-bit Timer/Counter) and Demo Program (C and ASM)

In this mode, the timer/counter 0 is configured as a 16-bit timer/counter, which is shown below.

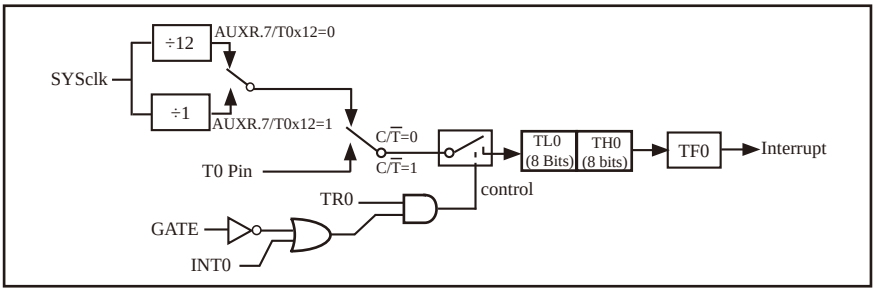

Timer/Counter 0 Mode 1 : 16-Bit Timer/Counter

In this mode, the timer register is configured as a 16-bit register. The 16-Bit register consists of all 8 bits of TH0 and the lower 8 bits of TL0. Setting the run flag (TR0) does not clear the registers. As the count rolls over from all 1s to all 0s, it sets the timer interrupt flag TF0.

The counted input is enabled to the timer when TR0 = 1 and either GATE = 0 or INT0 = 1.(Setting GATE = 1 allows the Timer to be controlled by external input INT0, to facilitate pulse width measurements.) TR0 is a control bit in the Special Function Register TCON. GATE is in TMOD. There are two different GATE bits. one for Timer 1 (TMOD.7) and one for Timer 0 (TMOD.3).

If C/$\overline{T}$ / TMOD.2 = 0, Timer/Counter 0 would be set for Timer operation (input from internal system clock). However, if C/$\overline{T}$ / TMOD.2 = 1, Timer/Counter 0 would be set for Counter operation (input from external T0/P3.4 pin).

In the “Timer” function, the timer register [TL0, TH0] is incremented every 12 system clocks or every system clock depending on AUXR.7(T0x12) bit. If T0x12 = 0, the register [TL0, TH0] will be incremented every 12 system clocks.If T0x12 = 1, the register [TL0, TH0] will be incremented every system clock.

There are two simple programs that demonstrates Timer 0 as 16-bit Timer/Counter, one written in C language while other in Assembly language.

1. C Program:

```
/*---------------------------------------------------------------------------------------------------*/
/* --- STC MCU International Limited ---------------------------------------------------------------*/
/* --- STC 1T Series 16-bit Timer Demo -------------------------------------------------------------*/
/* --- Mobile: (86)13922805190 ----------------------------------------------------------------------*/
/* --- Fax: 86-755-82905966 -------------------------------------------------------------------------*/
/* --- Tel: 86-755-82948412 -------------------------------------------------------------------------*/
/* --- Web: www.STCMCU.com --------------------------------------------------------------------------*/
/* If you want to use the program or the program referenced in the ------------------------------*/
/* article, please specify in which data and procedures from STC --------------------------------*/
/*---- In Keil C development environment, select the Intel 8052 to compiling ---------------------*/
/*----  And only contain < reg51.h > as header file ------------------------------------------------*/
/*---------------------------------------------------------------------------------------------------*/
```

STC MCU Limited

```
#include "reg51.h"

typedef unsigned char BYTE;
typedef unsigned int WORD;
//-----------------------------------------------
/* define constants */
#define FOSC 18432000L
#define MODE1T              //Timer clock mode, comment this line is 12T mode, uncomment is 1T mode

#ifdef MODE1T
#define T1MS (65536-FOSC/1000)      //1ms timer calculation method in 1T mode
#else
#define T1MS (65536-FOSC/12/1000)   //1ms timer calculation method in 12T mode
#endif

/* define SFR */
sfr     AUXR        =       0x8e;                   //Auxiliary register
sbit    TEST_LED    =       P0^0;                   //work LED, flash once per second

/* define variables */
WORD count;                                         //1000 times counter
//-----------------------------------------------
/* Timer0 interrupt routine */
void tm0_isr() interrupt 1 using 1
{
        TL0 = T1MS;                                 //reload timer0 low byte
        TH0 = T1MS >> 8;                            //reload timer0 high byte
        if (count-- == 0)                           //1ms * 1000 -> 1s
        {
                count = 1000;                       //reset counter
                TEST_LED = ! TEST_LED;              //work LED flash
        }
}
//-----------------------------------------------
/* main program */
void main()
{
#ifdef MODE1T
        AUXR = 0x80;                                //timer0 work in 1T mode
#endif
        TMOD = 0x01;                                //set timer0 as mode1 (16-bit)
        TL0 = T1MS;                                 //initial timer0 low byte
        TH0 = T1MS >> 8;                            //initial timer0 high byte
        TR0 = 1;                                    //timer0 start running
        ET0 = 1;                                    //enable timer0 interrupt
        EA = 1;                                     //open global interrupt switch
        count = 0;                                  //initial counter

        while (1);                                  //loop
}
```

STC MCU Limited.

2. Assembly Program:

```
;/*---------------------------------------------------------------------------------------------*/
;/* --- STC MCU International Limited ---------------------------------------------------------*/
;/* --- STC 1T Series 16-bit Timer Demo -------------------------------------------------------*/
;/* --- Mobile: (86)13922805190 ---------------------------------------------------------------*/
;/* --- Fax: 86-755-82905966 ------------------------------------------------------------------*/
;/* --- Tel: 86-755-82948412 ------------------------------------------------------------------*/
;/* --- Web: www.STCMCU.com -------------------------------------------------------------------*/
;/* If you want to use the program or the program referenced in the  ----------------------------*/
;/* article, please specify in which data and procedures from STC    ----------------------------*/
;/*---- In Keil C development environment, select the Intel 8052 to compiling ------------------*/
;/*----  And only contain < reg51.h > as header file ---------------------------------------------*/
;/*---------------------------------------------------------------------------------------------*/

;/* define constants */
#define MODE1T                  ;Timer clock mode, comment this line is 12T mode, uncomment is 1T mode

#ifdef MODE1T
T1MS    EQU 0B800H              ;1ms timer calculation method in 1T mode is (65536-18432000/1000)
#else
T1MS    EQU 0FA00H              ;1ms timer calculation method in 12T mode is (65536-18432000/12/1000)
#endif

;/* define SFR */
        AUXR        DATA    8EH             ;Auxiliary register
        TEST_LED    BIT     P1.0            ;work LED, flash once per second

;/* define variables */
        COUNT       DATA    20H             ;1000 times counter (2 bytes)

;-----------------------------------------------
        ORG     0000H
        LJMP    MAIN
        ORG     000BH
        LJMP    TM0_ISR

;-----------------------------------------------
;/* main program */
MAIN:
#ifdef MODE1T
        MOV     AUXR,   #80H            ;timer0 work in 1T mode
#endif
        MOV     TMOD,   #01H            ;set timer0 as mode1 (16-bit)
        MOV     TL0,    #LOW T1MS       ;initial timer0 low byte
        MOV     TH0,    #HIGH T1MS      ;initial timer0 high byte
        SETB    TR0                     ;timer0 start running
        SETB    ET0                     ;enable timer0 interrupt
        SETB    EA                      ;open global interrupt switch
        CLR     A
```

STC MCU Limited.

```
        MOV     COUNT,    A
        MOV     COUNT+1,  A                   ;initial counter
        SJMP    $

;-----------------------------------------------
;/* Timer0 interrupt routine */
TM0_ISR:
        PUSH    ACC
        PUSH    PSW
        MOV     TL0,      #LOW T1MS           ;reload timer0 low byte
        MOV     TH0,      #HIGH T1MS          ;reload timer0 high byte
        MOV     A,        COUNT
        ORL     A,        COUNT+1             ;check whether count(2byte) is equal to 0
        JNZ     SKIP
        MOV     COUNT,  #LOW 1000             ;1ms * 1000 -> 1s
        MOV     COUNT+1,#HIGH 1000
        CPL     TEST_LED                      ;work LED flash
SKIP:
        CLR     C
        MOV     A,        COUNT               ;count--
        SUBB    A,        #1
        MOV     COUNT,  A
        MOV     A,        COUNT+1
        SUBB    A,        #0
        MOV     COUNT+1,A
        POP     PSW
        POP     ACC
        RETI

;-----------------------------------------------

        END
```

STC MCU Limited.

7.2.3 Mode 2 (8-bit Auto-Reload Timer/Counter) and Demo Program

Mode 2 configures the timer register as an 8-bit Timer/Counter(TL0) with automatic reload. Overflow from TL0 not only set TF0, but also reload TL0 with the content of TH0, which is preset by software. The reload leaves TH0 unchanged.

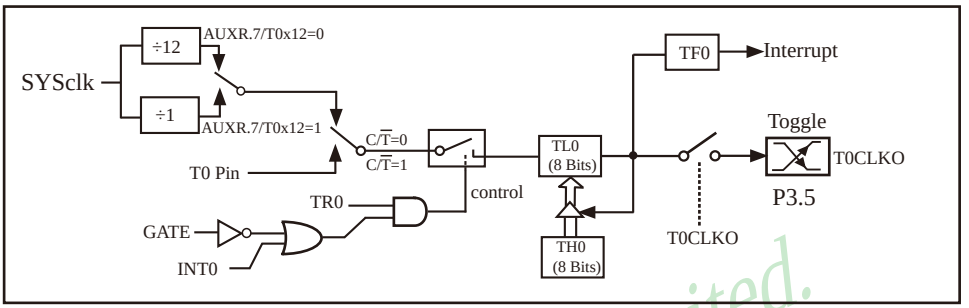

Timer/Counter 0 Mode 2: 8-Bit Auto-Reload

When T0CLKO/INT_CLKO.0=1, P3.5/T1 is configured for Timer 0 programmable clock output T0CLKO.

The clock output frequency = T0 overflow/2

If Timer/Counter 0 in mode 2 (8 bit auto-reloadable mode),

and if C/$\overline{T}$ = 0, namely Timer/Counter 0 count on the internal system clock,

When T0 in 1T mode(AUXR.7/T0x12=1), the output frequency = (SYSclk) / (256-TH0) / 2

When T0 in 12T mode(AUXR.7/T0x12=0), the output frequency = (SYSclk) / 12 / (256-TH0) / 2

and if C/$\overline{T}$ = 1, namely Timer/Counter 0 count on the external pulse input from P3.4/T0,

the output frequency = (T0_Pin_CLK) / (256-TH0) / 2

STC MCU Limited.

;T0 Interrupt (falling edge) Demo programs, where T0 operated in Mode 2 (8-bit auto-relaod mode)
; The Timer Interrupt can not wake up MCU from Power-Down mode in the following programs

1. C program

```
/*---------------------------------------------------------------------------------------------------*/
/* --- STC MCU International Limited ---------------------------------------------------------------*/
/* --- STC 1T Series MCU T0 (Falling edge) Demo ----------------------------------------------------*/
/* --- Mobile: (86)13922805190 ---------------------------------------------------------------------*/
/* --- Fax: 86-755-82905966 ------------------------------------------------------------------------*/
/* --- Tel: 86-755-82948412 ------------------------------------------------------------------------*/
/* --- Web: www.STCMCU.com -------------------------------------------------------------------------*/
/* If you want to use the program or the program referenced in the  ----------------------------*/
/* article, please specify in which data and procedures from STC    ----------------------------*/
/*---- In Keil C development environment, select the Intel 8052 to compiling ---------------------*/
/*----  And only contain < reg51.h > as header file ------------------------------------------------*/
/*---------------------------------------------------------------------------------------------------*/

#include "reg51.h"

sfr         AUXR    =       0x8e;                   //Auxiliary register

//T0 interrupt service routine
void t0int( ) interrupt 1                           //T0 interrupt (location at 000BH)
{
}

void main()
{
        AUXR    =       0x80;                       //timer0 work in 1T mode
        TMOD    =       0x06;                       //set timer0 as counter mode2 (8-bit auto-reload)
        TL0  =  TH0  =  0xff;                       //fill with 0xff to count one time
        TR0     =       1;                          //timer0 start run
        ET0     =       1;                          //enable T0 interrupt
        EA      =       1;                          //open global interrupt switch

        while (1);
}
```

STC MCU Limited.

2. Assembly program

```
/*---------------------------------------------------------------------------------------------------*/
/* --- STC MCU International Limited ---------------------------------------------------------------*/
/* --- STC 1T Series MCU T0 (Falling edge) Demo -----------------------------------------------------*/
/* --- Mobile: (86)13922805190 ----------------------------------------------------------------------*/
/* --- Fax: 86-755-82905966 -------------------------------------------------------------------------*/
/* --- Tel: 86-755-82948412 -------------------------------------------------------------------------*/
/* --- Web: www.STCMCU.com --------------------------------------------------------------------------*/
/* If you want to use the program or the program referenced in the  -----------------------------*/
/* article, please specify in which data and procedures from STC    -----------------------------*/
/*---- In Keil C development environment, select the Intel 8052 to compiling ---------------------*/
/*----  And only contain < reg51.h > as header file ----------------------------------------------*/
/*---------------------------------------------------------------------------------------------------*/

AUXR    DATA    08EH                    ;Auxiliary register

;-----------------------------------------
;interrupt vector table

        ORG     0000H
        LJMP    MAIN

        ORG     000BH                   ;T0 interrupt (location at 000BH)
        LJMP    T0INT

;-----------------------------------------

        ORG     0100H
MAIN:
        MOV     SP,     #7FH            ;initial SP
        MOV     AUXR,   #80H            ;timer0 work in 1T mode
        MOV     TMOD,   #06H            ;set timer0 as counter mode2 (8-bit auto-reload)
        MOV     A,      #0FFH
        MOV     TL0,    A               ;fill with 0xff to count one time
        MOV     TH0,    A
        SETB    TR0                     ;timer0 start run
        SETB    ET0                     ;enable T0 interrupt
        SETB    EA                      ;open global interrupt switch
        SJMP    $

;-----------------------------------------
;T0 interrupt service routine

T0INT:
        RETI

;-----------------------------------------

        END
```

STC MCU Limited.

7.2.4 Mode 3 (16-bit Auto-Relaod Timer/Couter whose Interrupt can not be disabled)

Timer/Counter 1 in Mode 3 simply holds its count, the effect is the same as setting TR1 = 0.

For Timer/Counter 0, mode 3 is the same as Mode 0, except that the timer interrupt in mode 3 can not be disabled by EA or ET0 bits. The principle diagram of mode 3 is shown below.

When T0 in mode 3, only can ET0/IE.1=1 enable its interrupt irrespective of EA/IE.7. Once the T0 interrupt is enabled by ET0/IE.1, it will not be disabled by any bit including ET0 and EA bits and will be in the highest priority, which will not be interrupted by any interrupt.

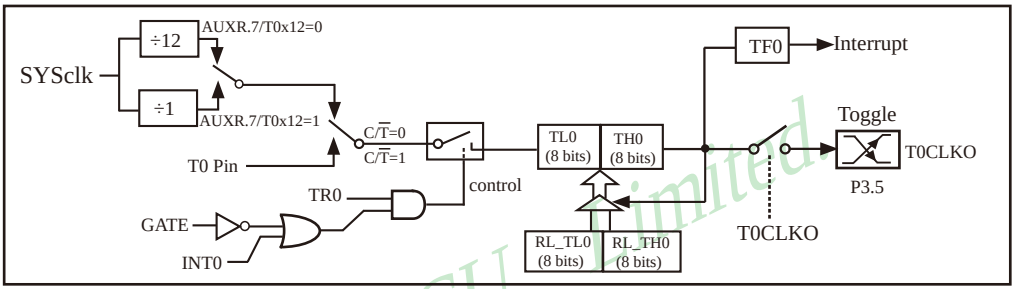

Timer/Counter 0 Mode 3: 16-bit auto-reload Timer/Counter whose interrupt can not be disabled

If Timer/Counter 0 works in mode 3, how is the T0 interrupt enabled.

Setting using C Language:

```
TMOD    =    0x11;        //set Timer/Counter 0 in mode 3
TR0     =    1;           //run Timer/Counter 0
//EA    =    1;           //Comment EA=1,
                          //the interrupt of T0 in mode 3 is irrespective of EA

ET0     =    1;           //Enable T0 interrupt
```

Setting using assembly:

```
MOV     TMOD,  #00H       //set Timer/Counter 0 in mode 3
SETB    TR0               //run Timer/Counter 0
//SETB  EA                //Comment EA=1,
                          //the interrupt of T0 in mode 3 is irrespective of EA

SETB    ET0               //Enable T0 interrupt
```

STC MCU Limited

7.3 Timer/Counter 1 Modes

Timer/Counter 1 can be configured for three modes by setting M1(TMOD.5) and M0(TMOD.4) in sepcial function register TMOD.

7.3.1 Mode 0 (16-Bit Auto-Relaod Timer/Counter) and Demo Program

In this mode, the timer/counter 1 is configured as a 16-bit auto-reload timer/counter, which is shown below.

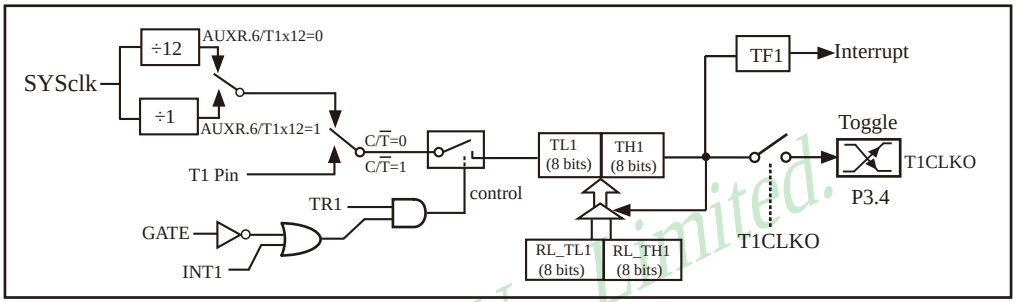

Timer/Counter 1 Mode 0: 16-Bit Auto-Relaod Timer/Counter

The counted input is enabled to the timer when TR1 = 1 and either GATE = 0 or INT1 = 1.(Setting GATE = 1 allows the Timer to be controlled by external input INT1, to facilitate pulse width measurements.) TR1 is a control bit in the Special Function Register TCON. GATE is in TMOD. There are two different GATE bits. one for Timer 1 (TMOD.7) and one for Timer 0 (TMOD.3).

If $C/\overline{T}$ / TMOD.6 = 0, Timer/Counter 1 would be set for Timer operation (input from internal system clock). However, if $C/\overline{T}$ / TMOD.6 = 1, Timer/Counter 1 would be set for Counter operation (input from external T1/P3.5 pin).

In the “Timer” function, the timer register [TL1, TH1] is incremented every 12 system clocks or every system clock depending on AUXR.6(T1x12) bit. If T1x12 = 0, the register [TL1, TH1] will be incremented every 12 system clocks.If T1x12 = 1, the register [TL1, TH1] will be incremented every system clock.

There are two hidden registers RL_TH1 and RL_TL1 for Timer/Counter 1. the address of RL_TH1 is the same as TH1's. And, RL_TL1 and TL1 share in the same address. When TR1 = 0 disable Timer/Counter 1, the content written into register [TL1, TH1] will be written into [RL_TL1, RL_TH1] too. When TR1 = 1 enable Timer/Counter 1, the content written into register [TL1, TH1] actually don not be writen into [TL1, TH1], but into [RL_TL1, RL_TH1]. When users read the content of [TL1, TH1], it is the content of [TL1, TH1] to read instead of [RL_TL1, RL_TH1].

When Timer/Counter 1 work in mode 0(TMOD[5:4]/[M1,M0]=00B), overflow from [TL1, TH1] will not only set TF1, but also reload [TL1, TH1] with the content of [RL_TL1, RL_TH1], which is preset by software. The reload leaves [RL_TL1, RL_TH1] unchanged.

STC MCU Limited.

When T1CLKO/INT_CLKO.1=1, P3.4/T0 is configured for Timer 1 programmable clock output T1CLKO.

The clock output frequency = T1 overflow/2

If Timer/Counter 1 in mode 2 (8 bit auto-reloadable mode),

and if $C/\overline{T}$ = 0, namely Timer/Counter 1 count on the internal system clock,

When T1 in 1T mode(AUXR.6/T1x12=1), the output frequency = (SYSclk) / (256-TH1) / 2

When T1 in 12T mode(AUXR.6/T1x12=0), the output frequency = (SYSclk) / 12 / (256-TH1) / 2

and if $C/\overline{T}$ = 1, namely Timer/Counter 1 count on the external pulse input from P3.5/T1,

the output frequency = (T1_Pin_CLK) / (256-TH1) / 2

RL_TH1 is the reloaded register of **TH1, RL_TL1** is the reload register of TL1.

7.3.1.1 Demo Program of 16-bit Auto-Reload Timer/Counter 1 (C and ASM)

1.C Program Listing

```
/*-------------------------------------------------------------------------------------------------*/
/* --- STC MCU  Limited. ---------------------------------------------------------------------*/
/* --- Exam Program of 16-bit auto-reload timer/counter 1 ------------------------------------*/
/* --- Mobile: (86)13922805190 ---------------------------------------------------------------*/
/* --- Fax: 86-755-82905966 ------------------------------------------------------------------*/
/* --- Tel: 86-755-82948412 ------------------------------------------------------------------*/
/* --- Web: www.STCMCU.com -------------------------------------------------------------------*/
/* If you want to use the program or the program referenced in the  ----------------------------*/
/* article, please specify in which data and procedures from STC    ----------------------------*/
/*---- In Keil C development environment, select the Intel 8052 to compiling ------------------*/
/*----  And only contain < reg51.h > as header file ---------------------------------------------*/
/*-------------------------------------------------------------------------------------------------*/

//suppose the frequency of test chip is 18.432MHz

#include "reg51.h"

typedef unsigned char BYTE;
typedef unsigned int WORD;

//-----------------------------------------

#define   FOSC    18432000L

#define   T1MS    (65536-FOSC/1000)             //1T mode, 18.432KHz
//#define T1MS    (65536-FOSC/12/1000)          //12T mode, 18.432KHz

sfr       AUXR    =       0x8e;                 //Auxiliary register
sbit      P10     =       P1^0;

//-----------------------------------------
```

```
/* Timer1 interrupt routine */
void tm1_isr() interrupt 3 using 1
{
        P10     =       ! P10;
}

//-----------------------------------------------

/* main program */
void main()
{
        AUXR    |=      0x40;                   //T1  in 1T mode
//      AUXR    &=      0xdf;                   //T1  in 12T mode

        TMOD    =       0x00;                   //set T1 as 16-bit auto-reload timer/counter
        TL1     =       T1MS;                   //initialize the timing value
        TH1     =       T1MS    >> 8;
        TR1     =       1;                      //run T1
        ET1     =       1;                      //Enable T1 interrupt
        EA      =        1;

        while (1);
}
```

STC MCU Limited.

2. Assembler Listing

```
/*-------------------------------------------------------------------------------------------------------*/
/* --- STC MCU  Limited. ---------------------------------------------------------------------------*/
/* --- Exam Program of 16-bit auto-reload timer/counter 1 ------------------------------------------*/
/* --- Mobile: (86)13922805190 ---------------------------------------------------------------------*/
/* --- Fax: 86-755-82905966 ------------------------------------------------------------------------*/
/* --- Tel: 86-755-82948412 ------------------------------------------------------------------------*/
/* --- Web: www.STCMCU.com -------------------------------------------------------------------------*/
/* If you want to use the program or the program referenced in the  ----------------------------*/
/* article, please specify in which data and procedures from STC    ----------------------------*/
/*---- In Keil C development environment, select the Intel 8052 to compiling ------------------*/
/*----  And only contain < reg51.h > as header file ------------------------------------------------*/
/*-------------------------------------------------------------------------------------------------------*/

//suppose the frequency of test chip is 18.432MHz


AUXR    DATA    08EH            //Auxiliary register

;-----------------------------------------------
T1MS    EQU     0B800H          //1T mode, the timing value of 1ms is (65536-18432000/1000)
//T1MS  EQU     0FA00H          //12Tmode, the timing value of 1ms is (65536-18432000/1000/12)
```

```
;-------------------------------------------------

        ORG     0000H
        LJMP    MAIN

        ORG     001BH
        LJMP    T1INT

;-------------------------------------------------

        ORG     0100H
MAIN:
        MOV     SP,     #3FH

        ORL     AUXR,   #40H            //T1  in 1T mode
//      ANL     AUXR,   #0DFH           //T1  in 12T mode

        MOV     TMOD,   #00H            //set T1 as 16-bit auto-reload timer/counter

        MOV     TL1,    #LOW  T1MS      //initialize the timing value
        MOV     TH1,    #HIGH T1MS
        SETB    TR1
        SETB    ET1                     //run T1

        SETB    EA

        SJMP    $

//----------------------------------------
//Timer1 interrupt routine

T1INT:
        CPL     P1.0
        RETI

;----------------------------------------

        END
```

STC MCU Limited.

7.3.1.2 Demo Program of T1 Programmable Clock Output (C and ASM)

—— T1 as 16-bit Auto-Reload Timer/Counter

The following is the example program that Timer 1 output programmable clock by dividing the frequency of internal system clock or the clock input from external pin T1/P3.5 (C and assembly):

1. C Program Listing

```
/*-------------------------------------------------------------------------------------------------*/
/* --- STC MCU  Limited. ---------------------------------------------------------------------------*/
/* --- Exam Program of Timer 1 porgrammable clock output -------------------------------------------*/
/* --- Mobile: (86)13922805190 ---------------------------------------------------------------------*/
/* --- Fax: 86-755-82905966 ------------------------------------------------------------------------*/
/* --- Tel: 86-755-82948412 ------------------------------------------------------------------------*/
/* --- Web: www.STCMCU.com -------------------------------------------------------------------------*/
/* If you want to use the program or the program referenced in the  ----------------------------*/
/* article, please specify in which data and procedures from STC    ----------------------------*/
/*---- In Keil C development environment, select the Intel 8052 to compiling ----------------*/
/*----  And only contain < reg51.h > as header file ------------------------------------------*/
/*-------------------------------------------------------------------------------------------------*/

//suppose the frequency of test chip is 18.432MHz

#include "reg51.h"

typedef   unsigned char    BYTE;
typedef   unsigned int     WORD;

#define   FOSC    18432000L

//-----------------------------------------------
sfr   AUXR        =        0x8e;
sfr   INT_CLKO    =        0x8f;

sbit  T1CLKO      =        P3^4;

#define   F38_4KHz        (65536-FOSC/2/38400)              //1T Mode
//#define F38_4KHz        (65536-FOSC/2/12/38400)           //12T Mode

//-----------------------------------------------
void main()
{
          AUXR   |=       0x40;                   //Timer 1 in 1T mode
//        AUXR   &=       ~0x40;                  //Timer 1 in 12T mode
```

STC MCU Limited.

```
        TMOD    =       0x00;                   //set Timer 1 in mode 0(16 bit auto-reloadable mode)

        TMOD    &=      ~0x40;                  //C/T1=0, count on internal system clock
//      TMOD    |=      0x40;                   //C/T1=1, count on external pulse input from T1 pin

        TL1     =       F38_4KHz;               //Initial timing value
        TH1     =       F38_4KHz >> 8;
        TR1     =       1;
        INT_CLKO        =       0x02;

        while (1);
}
```

2. Assembler Listing

```
/*---------------------------------------------------------------------------------------------*/
/* --- STC MCU  Limited. -------------------------------------------------------------------*/
/* --- Exam Program of Timer 1 porgrammable clock output -----------------------------------*/
/* --- Mobile: (86)13922805190 -------------------------------------------------------------*/
/* --- Fax: 86-755-82905966 ----------------------------------------------------------------*/
/* --- Tel: 86-755-82948412 ----------------------------------------------------------------*/
/* --- Web: www.STCMCU.com -----------------------------------------------------------------*/
/* If you want to use the program or the program referenced in the  ----------------------*/
/* article, please specify in which data and procedures from STC    ----------------------*/
/*---- In Keil C development environment, select the Intel 8052 to compiling ----------*/
/*----  And only contain < reg51.h > as header file ------------------------------------------*/
/*---------------------------------------------------------------------------------------------*/

//suppose the frequency of test chip is 18.432MHz

AUXR            DATA    08EH
INT_CLKO        DATA    08FH

T1CLKO          BIT     P3.4
F38_4KHz        EQU     0FF10H          //38.4KHz(1T mode, 65536-18432000/2/38400)
//F38_4KHz      EQU     0FFECH          //38.4KHz(12T mode, (65536-18432000/2/12/38400)

        ORG     0000H
        LJMP    MAIN

//-----------------------------------------------

        ORG     0100H
```

STC MCU Limited.

```
MAIN:
        MOV     SP,         #3FH

        ORL     AUXR,   #40H                    //Timer 1 in 1T mode
//      ANL     AUXR,   #0BFH                   //Timer 1 in 12T mode

        MOV     TMOD,   #00H                    //set Timer 1 in mode 0(16 bit auto-reloadable mode)

        ANL     TMOD,   #0BFH                   //C/T1=0,  count on internal system clock
//      ORL     TMOD,   #40H                    //C/T1=1, count on external pulse input from T1 pin

        MOV     TL1,        #LOW F38_4KHz       //Initial timing value
        MOV     TH1,        #HIGH F38_4KHz
        SETB    TR1
        MOV     INT_CLKO,       #02H

        SJMP    $

;-------------------------------------------------

        END
```

STC MCU Limited.

7.3.1.3 Demo Program using 16-bit auto-reload Timer 1 as UART1 baud-rate Generator

1. C Program Listing

```
/*---------------------------------------------------------------------------------------------------*/
/* --- STC MCU  Limited. ---------------------------------------------------------------------------*/
/* --- Exam Program using 16-bit auto-reload timer/counter 1 as UART1 baud-rate generator */
/* --- Mobile: (86)13922805190 ---------------------------------------------------------------------*/
/* --- Fax: 86-755-82905966 ------------------------------------------------------------------------*/
/* --- Tel: 86-755-82948412 ------------------------------------------------------------------------*/
/* --- Web: www.STCMCU.com -------------------------------------------------------------------------*/
/* If you want to use the program or the program referenced in the  ----------------------------*/
/* article, please specify in which data and procedures from STC    ----------------------------*/
/*---- In Keil C development environment, select the Intel 8052 to compiling ------------------*/
/*----  And only contain < reg51.h > as header file ---------------------------------------------*/
/*---------------------------------------------------------------------------------------------------*/

//suppose the frequency of test chip is 18.432MHz

#include "reg51.h"
#include "intrins.h"

typedef unsigned char    BYTE;
typedef unsigned int     WORD;

#define  FOSC  18432000L                    //system frequency
#define  BAUD  115200                       //baud-rate

#define  NONE_PARITY       0                //none parity
#define  ODD_PARITY        1                //odd parity
#define  EVEN_PARITY       2                //even parity
#define  MARK_PARITY       3                //mark parity
#define  SPACE_PARITY      4                //space parity

#define  PARITYBIT EVEN_PARITY              //define the parity bit

sfr      AUXR   =    0x8e;                 //Auxiliary register

sbit     P22    =    P2^2;

bit      busy;

void SendData(BYTE dat);
void SendString(char *s);
```

STC MCU Limited.

```
void main()
{
#if (PARITYBIT == NONE_PARITY)
    SCON    =    0x50;                    //8-bit variable baud-rate
#elif (PARITYBIT == ODD_PARITY) || (PARITYBIT == EVEN_PARITY) || (PARITYBIT == MARK_PARITY)
    SCON    =    0xda;                    //9-bit variable baud-rate
                                          //the parity bit is initialized for 1
#elif (PARITYBIT == SPACE_PARITY)
    SCON    =    0xd2;                    //9-bit variable baud-rate
                                          //the parity bit is initialized for 0
#endif

    AUXR    =    0x40;                         //T1 in 1T mode
    TMOD    =    0x00;                    //T1 in mode 0 (16-bit auto-reload timer/counter)
    TL1     =    (65536 - (FOSC/32/BAUD));     //set the preload value
    TH1     =    (65536 - (FOSC/32/BAUD))>>8;
    TR1     =    1;                            //run T1
    ES      =    1;                            //enable UART1 interrupt
    EA      =    1;

    SendString("STC15W4K32S4\r\nUart Test !\r\n");
    while(1);
}


/*----------------------------
UART Interrupt Service Routine
----------------------------*/
void Uart() interrupt 4 using 1
{
    if (RI)
    {
        RI = 0;                           //clear RI
        P0 = SBUF;                        //serial data is shown in P0
        P22 = RB8;                        //P2.2 display parity bit
    }
    if (TI)
    {
        TI = 0;                           //clear TI
        busy = 0;                         //clear busy flag
    }
}
```

STC MCU Limited

```
/*---------------------------
Send UART data
---------------------------*/
void SendData(BYTE dat)
{
        while (busy);                                   //wait to finish sending the previous data
        ACC = dat;                                      // access to the parity bit ---- P (PSW.0)
        if (P)
        {
        #if (PARITYBIT == ODD_PARITY)
                TB8 = 0;                                //the parity bit is set for 0
        #elif (PARITYBIT == EVEN_PARITY)
                TB8 = 1;                                //the parity bit is set for 1
        #endif
        }
        else
        {
        #if (PARITYBIT == ODD_PARITY)
                TB8 = 1;                                //the parity bit is set for 1
        #elif (PARITYBIT == EVEN_PARITY)
                TB8 = 0;                        //the parity bit is set for 0
        #endif
        }
        busy = 1;
        SBUF = ACC;                                     //write the data into SBUF of UART
}

/*---------------------------
Send string
---------------------------*/
void SendString(char *s)
{
        while (*s)
        {
                SendData(*s++);                 //send the current char
        }
}
```

STC MCU Limited.

2. Assembler Listing

```
/*---------------------------------------------------------------------------------------------------*/
/* --- STC MCU  Limited. ---------------------------------------------------------------------------*/
/* --- Exam Program using 16-bit auto-reload timer/counter 1 as UART1 baud-rate generator */
/* --- Mobile: (86)13922805190 ---------------------------------------------------------------------*/
/* --- Fax: 86-755-82905966 ------------------------------------------------------------------------*/
/* --- Tel: 86-755-82948412 ------------------------------------------------------------------------*/
/* --- Web: www.STCMCU.com -------------------------------------------------------------------------*/
/* If you want to use the program or the program referenced in the  ----------------------------*/
/* article, please specify in which data and procedures from STC    ----------------------------*/
/*---- In Keil C development environment, select the Intel 8052 to compiling ----------------*/
/*----  And only contain < reg51.h > as header file ------------------------------------------*/
/*---------------------------------------------------------------------------------------------------*/

#define   NONE_PARITY   0                 //none parity
#define   ODD_PARITY    1                 //odd parity
#define   EVEN_PARITY   2                 //even parity
#define   MARK_PARITY   3                 //mark parity
#define   SPACE_PARITY  4                 //space parity

#define   PARITYBIT EVEN_PARITY           //define the parity bit

//---------------------------------------

AUXR    EQU     08EH                      //Auxiliary register

BUSY    BIT     20H.0

//---------------------------------------


        ORG     0000H
        LJMP    MAIN

        ORG     0023H
        LJMP    UART_ISR
//---------------------------------------
        ORG     0100H
MAIN:
        CLR     BUSY
        CLR     EA
        MOV     SP,     #3FH

#if (PARITYBIT == NONE_PARITY)
        MOV     SCON,   #50H            //8-bit variable baud-rate
#elif (PARITYBIT == ODD_PARITY) || (PARITYBIT == EVEN_PARITY) || (PARITYBIT == MARK_PARITY)
        MOV     SCON,   #0DAH           //9-bit variable baud-rate, the parity bit is initialized for 1
#elif (PARITYBIT == SPACE_PARITY)
        MOV     SCON,   #0D2H           //9-bit variable baud-rate, the parity bit is initialized for 0
#endif
```

STC MCU Limited.

```
//---------------------------------
        MOV     AUXR,   #40H            //T1 in 1T mode
        MOV     TMOD,   #00H            //T1 in mode 0 (16-bit auto-reload timer/counter)
        MOV     TL1,    #0FBH           //set the preload value (65536-18432000/32/115200)
        MOV     TH1,    #0FFH
        SETB    TR1                     //run T1
        SETB    ES                      //enable UART1 interrupt
        SETB    EA

        MOV     DPTR,   #TESTSTR
        LCALL   SENDSTRING

        SJMP    $
;-----------------------------------------
TESTSTR:
        DB  "STC15W4K32S4 Uart1 Test !",0DH,0AH,0

;/*--------------------------
;UART Interrupt Service Routine
;--------------------------*/
UART_ISR:
        PUSH    ACC
        PUSH    PSW
        JNB     RI,     CHECKTI
        CLR     RI                      //clear RI
        MOV     P0,     SBUF            //serial data is shown in P0
        MOV     C,      RB8
        MOV     P2.2,   C               //P2.2 display parity bit


CHECKTI:
        JNB     TI,     ISR_EXIT
        CLR     TI                      //clear TI
        CLR     BUSY                    //clear busy flag
ISR_EXIT:
        POP     PSW
        POP     ACC
        RETI

;/*--------------------------
;Send UART data
;--------------------------*/
SENDDATA:
        JB      BUSY,   $               //wait to finish sending the previous data
        MOV     ACC,    A               //access to the parity bit ---- P (PSW.0)
        JNB     P,      EVEN1INACC
```

STC MCU Limited.

```
ODD1INACC:
#if (PARITYBIT == ODD_PARITY)
        CLR     TB8                             //the parity bit is set for 0
#elif (PARITYBIT == EVEN_PARITY)
        SETB    TB8                             //the parity bit is set for 1
#endif
        SJMP    PARITYBITOK
EVEN1INACC:
#if (PARITYBIT == ODD_PARITY)
        SETB    TB8                             //the parity bit is set for 1
#elif (PARITYBIT == EVEN_PARITY)
        CLR     TB8                             //the parity bit is set for 0
#endif
PARITYBITOK:
        SETB    BUSY
        MOV     SBUF,   A                       //write the data into SBUF of UART
        RET

;/*----------------------------
;Send string
//----------------------------*/
SENDSTRING:
        CLR     A
        MOVC    A,      @A+DPTR
        JZ      STRINGEND
        INC     DPTR
        LCALL   SENDDATA
        SJMP    SENDSTRING
STRINGEND:
        RET
//-----------------------------------------
        END
```

STC MCU Limited.

7.3.1.4 Demo Program using T1 to expand External Interrupt (Falling edge)
—— T1 as 16-bit Auto-Relaod Counter (C and ASM)

1.C Program Listing

```
/*---------------------------------------------------------------------------------------------------*/
/* --- STC MCU  Limited. ---------------------------------------------------------------------------*/
/* --- Exam Program using T1 to extend external interrupt (falling edge) ---------------------------*/
/* --- Mobile: (86)13922805190 ---------------------------------------------------------------------*/
/* --- Fax: 86-755-82905966 ------------------------------------------------------------------------*/
/* --- Tel: 86-755-82948412 ------------------------------------------------------------------------*/
/* --- Web: www.STCMCU.com -------------------------------------------------------------------------*/
/* If you want to use the program or the program referenced in the  ----------------------------*/
/* article, please specify in which data and procedures from STC    ----------------------------*/
/*---- In Keil C development environment, select the Intel 8052 to compiling ---------------------*/
/*----  And only contain < reg51.h > as header file ----------------------------------------------*/
/*---------------------------------------------------------------------------------------------------*/

//suppose the frequency of test chip is 18.432MHz

#include "reg51.h"
#include "intrins.h"

//-----------------------------------------

sfr     AUXR    =   0x8e;              //Auxiliary register
sbit    P10     =   P1^0;

//-----------------------------------------
//Timer 1 Interrupt Service Routine
void t1int() interrupt 3                //Timer 1 interrupt, location at 001BH
{
    P10     =   !P10;
}

void main()
{
    AUXR    =   0x40;                   //T1 in 1T mode
    TMOD    =   0x40;                   //T1 as external counter
                                        //and T1 in 16-bit auto-relaod mode
    TH1 = TL1 = 0xff;                   //Set the initial value of T1
    TR1     =   1;                      //start up T1
    ET1     =   1;                      //Enable T1 interrupt

    EA      =   1;

    while (1);
}
```

STC MCU Limited.

2.Assembler Listing

```
/*---------------------------------------------------------------------------------------------------*/
/* --- STC MCU  Limited. ---------------------------------------------------------------------------*/
/* --- Exam Program using T1 to extend external interrupt (falling edge) ---------------------------*/
/* --- Mobile: (86)13922805190 ---------------------------------------------------------------------*/
/* --- Fax: 86-755-82905966 ------------------------------------------------------------------------*/
/* --- Tel: 86-755-82948412 ------------------------------------------------------------------------*/
/* --- Web: www.STCMCU.com -------------------------------------------------------------------------*/
/* If you want to use the program or the program referenced in the  ----------------------------*/
/* article, please specify in which data and procedures from STC    ----------------------------*/
/*---- In Keil C development environment, select the Intel 8052 to compiling ----------------*/
/*----  And only contain < reg51.h > as header file ------------------------------------------*/
/*---------------------------------------------------------------------------------------------------*/

//suppose the frequency of test chip is 18.432MHz

AUXR    DATA   08EH                  //Auxiliary register
//---------------------------------------

        ORG    0000H
        LJMP   MAIN

        ORG    001BH                 //Timer 1 interrupt, location at 001BH
        LJMP   T1INT
//---------------------------------------

        ORG    0100H
MAIN:
        MOV    SP,     #3FH

        MOV    AUXR,   #40H          //T1 in 1T mode
        MOV    TMOD,   #40H          //T1 as external counter
                                     //and T1 in 16-bit auto-relaod mode
        MOV    A,      #0FFH         //Set the initial value of T1
        MOV    TL1,    A
        MOV    TH1,    A
        SETB   TR1                   //start up T1
        SETB   ET1                   //Enable T1 interrupt

        SETB   EA

        SJMP   $

//---------------------------------------
//Timer 1 Interrupt Service Routine

T1INT:
        CPL    P1.0
RETI
;---------------------------------------
        END
```

STC MCU Limited.

7.3.2 Mode 1 (16-bit Timer/Counter) and Demo Programs (C and ASM)

In this mode, the timer/counter 1 is configured as a 16-bit timer/counter, which is shown below.

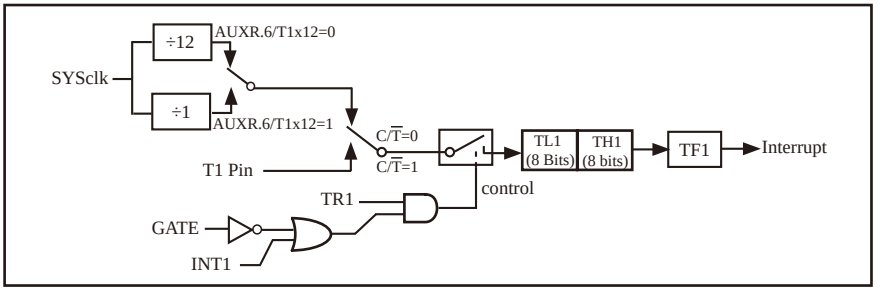

Timer/Counter 1 Mode 1 : 16-Bit Timer/Counter

In this mode, the timer register is configured as a 16-bit register. The 16-Bit register consists of all 8 bits of TH1 and the lower 8 bits of TL1. Setting the run flag (TR1) does not clear the registers. As the count rolls over from all 1s to all 0s, it sets the timer interrupt flag TF1.

The counted input is enabled to the timer when TR1 = 1 and either GATE = 0 or INT1 = 1.(Setting GATE = 1 allows the Timer to be controlled by external input INT1, to facilitate pulse width measurements.) TR1 is a control bit in the Special Function Register TCON. GATE is in TMOD. There are two different GATE bits. one for Timer 1 (TMOD.7) and one for Timer 0 (TMOD.3).

If $C/\overline{T}$ / TMOD.6 = 0, Timer/Counter 1 would be set for Timer operation (input from internal system clock). However, if $C/\overline{T}$ / TMOD.6 = 1, Timer/Counter 1 would be set for Counter operation (input from external T1/P3.5 pin).

In the “Timer” function, the timer register [TL1, TH1] is incremented every 12 system clocks or every system clock depending on AUXR.6(T1x12) bit. If T1x12 = 0, the register [TL1, TH1] will be incremented every 12 system clocks.If T1x12 = 1, the register [TL1, TH1] will be incremented every system clock.

There are another two simple programs that demonstrates Timer 1 as 16-bit Timer/Counter, one written in C language while other in Assembly language.

1. C Program

```
/*---------------------------------------------------------------------------------------------------*/
/* --- STC MCU International Limited ---------------------------------------------------------------*/
/* --- STC 1T Series 16-bit Timer Demo -------------------------------------------------------------*/
/* --- Mobile: (86)13922805190 ----------------------------------------------------------------------*/
/* --- Fax: 86-755-82905966 -------------------------------------------------------------------------*/
/* --- Tel: 86-755-82948412 -------------------------------------------------------------------------*/
/* --- Web: www.STCMCU.com --------------------------------------------------------------------------*/
/* If you want to use the program or the program referenced in the  -----------------------------*/
/* article, please specify in which data and procedures from STC    -----------------------------*/
/*---- In Keil C development environment, select the Intel 8052 to compiling ---------------------*/
/*----  And only contain < reg51.h > as header file ----------------------------------------------*/
/*---------------------------------------------------------------------------------------------------*/
```

STC MCU Limited.

```
#include "reg51.h"

typedef unsigned char BYTE;
typedef unsigned int WORD;
//-----------------------------------------------
/* define constants */
#define FOSC 18432000L
#define MODE1T              //Timer clock mode, comment this line is 12T mode, uncomment is 1T mode

#ifdef MODE1T
#define T1MS (65536-FOSC/1000)          //1ms timer calculation method in 1T mode
#else
#define T1MS (65536-FOSC/12/1000)       //1ms timer calculation method in 12T mode
#endif

/* define SFR */
sfr     AUXR        =  0x8e;            //Auxiliary register
sbit    TEST_LED  =  P0^0;              //work LED, flash once per second

/* define variables */
WORD count;                             //1000 times counter
//-----------------------------------------------
/* Timer0 interrupt routine */
void tm1_isr() interrupt 3 using 1
{
        TL1 = T1MS;                     //reload timer1 low byte
        TH1 = T1MS >> 8;                //reload timer1 high byte
        if (count-- == 0)               //1ms * 1000 -> 1s
        {
                count = 1000;                   //reset counter
                TEST_LED = ! TEST_LED;          //work LED flash
        }
}
//-----------------------------------------------
/* main program */
void main()
{
#ifdef MODE1T
        AUXR = 0x40;                            //timer1 work in 1T mode
#endif
        TMOD = 0x10;                            //set timer1 as mode1 (16-bit)
        TL1 = T1MS;                             //initial timer1 low byte
        TH1 = T1MS >> 8;                        //initial timer1 high byte
        TR1 = 1;                                //timer1 start running
        ET1 = 1;                                //enable timer1 interrupt
        EA = 1;                                 //open global interrupt switch
        count = 0;                              //initial counter

        while (1);                              //loop
}
```

STC MCU Limited.

2. Assembly Program

```
/*---------------------------------------------------------------------------------------------------*/
/* --- STC MCU International Limited ---------------------------------------------------------------*/
/* --- STC 1T Series 16-bit Timer Demo -------------------------------------------------------------*/
/* --- Mobile: (86)13922805190 ---------------------------------------------------------------------*/
/* --- Fax: 86-755-82905966 ------------------------------------------------------------------------*/
/* --- Tel: 86-755-82948412 ------------------------------------------------------------------------*/
/* --- Web: www.STCMCU.com -------------------------------------------------------------------------*/
/* If you want to use the program or the program referenced in the  ----------------------------*/
/* article, please specify in which data and procedures from STC    ----------------------------*/
/*---- In Keil C development environment, select the Intel 8052 to compiling ----------------*/
/*----  And only contain < reg51.h > as header file ---------------------------------------------*/
/*---------------------------------------------------------------------------------------------------*/

;/* define constants */
#define   MODE1T                ;Timer clock mode, comment this line is 12T mode, uncomment is 1T mode

#ifdef MODE1T
T1MS    EQU     0B800H          ;1ms timer calculation method in 1T mode is (65536-18432000/1000)
#else
T1MS    EQU     0FA00H          ;1ms timer calculation method in 12T mode is (65536-18432000/12/1000)
#endif

;/* define SFR */
AUXR        DATA        8EH                 ;Auxiliary register
TEST_LED    BIT         P1.0                ;work LED, flash once per second

;/* define variables */
COUNT       DATA        20H                 ;1000 times counter (2 bytes)

;----------------------------------------------

            ORG     0000H
            LJMP    MAIN
            ORG     001BH
            LJMP    TM1_ISR

;----------------------------------------------

;/* main program */
MAIN:
#ifdef MODE1T
            MOV     AUXR,   #40H            ;timer1 work in 1T mode
#endif
            MOV     TMOD,   #10H            ;set timer1 as mode1 (16-bit)
            MOV     TL1,    #LOW T1MS       ;initial timer1 low byte
            MOV     TH1,    #HIGH T1MS      ;initial timer1 high byte
            SETB    TR1                     ;timer1 start running
            SETB    ET1                     ;enable timer1 interrupt
            SETB    EA                      ;open global interrupt switch
            CLR     A
```

STC MCU Limited.

```
        MOV     COUNT, A
        MOV     COUNT+1,A                       ;initial counter
        SJMP    $
;-----------------------------------------------

;/* Timer1 interrupt routine */
TM1_ISR:
        PUSH    ACC
        PUSH    PSW
        MOV     TL1,    #LOW T1MS               ;reload timer1 low byte
        MOV     TH1,    #HIGH T1MS              ;reload timer1 high byte
        MOV     A,      COUNT
        ORL     A,      COUNT+1                 ;check whether count(2byte) is equal to 0
        JNZ     SKIP
        MOV     COUNT, #LOW 1000                ;1ms * 1000 -> 1s
        MOV     COUNT+1,#HIGH 1000
        CPL     TEST_LED                        ;work LED flash
SKIP:
        CLR     C
        MOV     A,      COUNT                   ;count--
        SUBB    A,      #1
        MOV     COUNT, A
        MOV     A,      COUNT+1
        SUBB    A,      #0
        MOV     COUNT+1,A
        POP     PSW
        POP     ACC
        RETI

;-----------------------------------------------

        END
```

STC MCU Limited.

7.3.3 Mode 2 (8-bit Auto-Reload Timer/Counter) and Demo Program

Mode 2 configures the timer register as an 8-bit t Timer/Counter (TL1) with automatic reload. Overflow from TL1 not only set TF1, but also reload TL1 with the content of TH1, which is preset by software. The reload leaves TH1 unchanged.

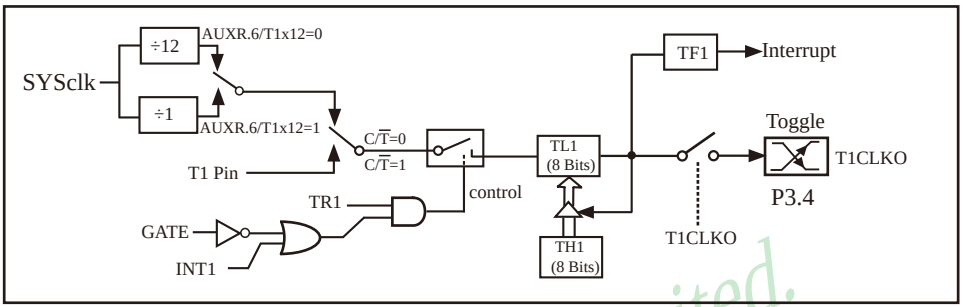

Timer/Counter 1 Mode 2: 8-Bit Auto-Reload

When T1CLKO/INT_CLKO.1=1, P3.4/T0 is configured for Timer 1 programmable clock output T1CLKO.

The clock output frequency = T1 overflow/2

If Timer/Counter 1 in mode 2 (8 bit auto-reloadable mode),

and if C/$\overline{T}$ = 0, namely Timer/Counter 1 count on the internal system clock,

When T1 in 1T mode(AUXR.6/T1x12=1), the output frequency = (SYSclk) / (256-TH1) / 2

When T1 in 12T mode(AUXR.6/T1x12=0), the output frequency = (SYSclk) / 12 / (256-TH1) / 2

and if C/$\overline{T}$ = 1, namely Timer/Counter 1 count on the external pulse input from P3.5/T1,

the output frequency = (T1_Pin_CLK) / (256-TH1) / 2

RL_TH1 is the reloaded register of **TH1**, **RL_TL1** is the reload register of TL1.

STC MCU Limited.

7.3.3.1 Demo Program using 8-bit auto-reload Timer 1 as UART1 baud-rate Generator

1. C Program Listing

```
/*---------------------------------------------------------------------------------------------------------*/
/* --- STC MCU  Limited. ---------------------------------------------------------------------------------*/
/* --- Exam Program using 8-bit auto-reload timer/counter 1 as UART1 baud-rate generator -*/
/* --- Mobile: (86)13922805190 ---------------------------------------------------------------------------*/
/* --- Fax: 86-755-82905966 ------------------------------------------------------------------------------*/
/* --- Tel: 86-755-82948412 ------------------------------------------------------------------------------*/
/* --- Web: www.STCMCU.com -------------------------------------------------------------------------------*/
/* If you want to use the program or the program referenced in the  ----------------------------*/
/* article, please specify in which data and procedures from STC    ----------------------------*/
/*---- In Keil C development environment, select the Intel 8052 to compiling ------------------*/
/*----  And only contain < reg51.h > as header file ------------------------------------------------*/
/*---------------------------------------------------------------------------------------------------------*/

//suppose the frequency of test chip is 18.432MHz

#include "reg51.h"

#include "intrins.h"

typedef unsigned char   BYTE;
typedef unsigned int    WORD;

#define   FOSC    18432000L                 //system frequency
#define   BAUD    115200                    //baud-rate

#define   NONE_PARITY       0               //none parity
#define   ODD_PARITY        1               //odd parity
#define   EVEN_PARITY       2               //even parity
#define   MARK_PARITY       3               //mark parity
#define   SPACE_PARITY      4               //space parity

#define PARITYBIT EVEN_PARITY               //define the parity bit

sfr     AUXR    =       0x8e;               //Auxiliary register
sbit    P22     =       P2^2;
bit     busy;

void SendData(BYTE dat);
void SendString(char *s);

void main()
{
#if (PARITYBIT == NONE_PARITY)
    SCON = 0x50;                            //8-bit variable baud-rate
#elif (PARITYBIT == ODD_PARITY) || (PARITYBIT == EVEN_PARITY) || (PARITYBIT == MARK_PARITY)
    SCON = 0xda;                            //9-bit variable baud-rate, the parity bit is initialized for 1
```

STC MCU Limited.

```
#elif (PARITYBIT == SPACE_PARITY)
        SCON    =       0xd2;           //9-bit variable baud-rate, the parity bit is initialized for 0
#endif

        AUXR    =       0x40;           //T1 in 1T mode
        TMOD    =       0x20;           //T1 in mode2 (8-bit auto-reload timer/counter)
        TL1     =       (256 - (FOSC/32/BAUD));   //set the preload value
        TH1     =       (256 - (FOSC/32/BAUD));
        TR1     =       1;              //run T1
        ES      =       1;              //enable UART1 interrupt
        EA      =       1;

        SendString("STC15W4K32S4\r\nUart Test !\r\n");
        while(1);
}

/*----------------------------
UART Interrupt Service Routine
----------------------------*/
void Uart() interrupt 4 using 1
{
        if (RI)
        {
                RI      =       0;      //clear RI
                P0      =       SBUF;   //serial data is shown in P0
                P22     =       RB8;    //P2.2 display parity bit
        }
         if (TI)
        {
                TI      =       0;      //clear TI
                busy    =       0;      //clear busy flag
        }
}

/*----------------------------
Send UART data
----------------------------*/
void SendData(BYTE dat)
{
        while (busy);                   //wait to finish sending the previous data
        ACC = dat;                      //access to the parity bit ---- P (PSW.0)
        if (P)
        {
        #if (PARITYBIT == ODD_PARITY)
                TB8 = 0;                //the parity bit is set for 0
        #elif (PARITYBIT == EVEN_PARITY)
                TB8 = 1;                //the parity bit is set for 1
        #endif
        }
```

STC MCU Limited.

```
        else
        {
        #if (PARITYBIT == ODD_PARITY)
                TB8 = 1;                        //the parity bit is set for 1
        #elif (PARITYBIT == EVEN_PARITY)
                TB8 = 0;                        //the parity bit is set for 0
        #endif
        }
        busy = 1;
        SBUF = ACC;                             //write the data into SBUF of UART
}

/*----------------------------
Send string
----------------------------*/
void SendString(char *s)
{
        while (*s)
        {
                SendData(*s++);
        }
}
```

STC MCU Limited.

2. Assembler Listing

```
/*---------------------------------------------------------------------------------------------*/
/* --- STC MCU  Limited. ---------------------------------------------------------------------*/
/* --- Exam Program using 8-bit auto-reload timer/counter 1 as UART1 baud-rate generator -*/
/* --- Mobile: (86)13922805190 ---------------------------------------------------------------*/
/* --- Fax: 86-755-82905966 ------------------------------------------------------------------*/
/* --- Tel: 86-755-82948412 ------------------------------------------------------------------*/
/* --- Web: www.STCMCU.com -------------------------------------------------------------------*/
/* If you want to use the program or the program referenced in the  ----------------------------*/
/* article, please specify in which data and procedures from STC    ----------------------------*/
/*---- In Keil C development environment, select the Intel 8052 to compiling ----------------*/
/*----  And only contain < reg51.h > as header file ------------------------------------------*/
/*---------------------------------------------------------------------------------------------*/

//suppose the frequency of test chip is 18.432MHz

#define   NONE_PARITY   0                 //none parity
#define   ODD_PARITY    1                 //odd parity
#define   EVEN_PARITY   2                 //even parity
#define   MARK_PARITY   3                 //mark parity
#define   SPACE_PARITY  4                 //space parity

#define   PARITYBIT  EVEN_PARITY          //define the parity bit

//---------------------------------------
```

```
AUXR    EQU     08EH                    //Auxiliary register

BUSY    BIT     20H.0

//-----------------------------------------
        ORG     0000H
        LJMP    MAIN

        ORG     0023H
        LJMP    UART_ISR
//-----------------------------------------
        ORG     0100H
MAIN:
        CLR     BUSY
        CLR     EA
        MOV     SP,     #3FH

#if (PARITYBIT == NONE_PARITY)
        MOV     SCON,   #50H            //8-bit variable baud-rate
#elif (PARITYBIT == ODD_PARITY) || (PARITYBIT == EVEN_PARITY) || (PARITYBIT == MARK_PARITY)
        MOV     SCON,   #0DAH           //9-bit variable baud-rate, the parity bit is initialized for 1
#elif (PARITYBIT == SPACE_PARITY)
        MOV     SCON,   #0D2H           //9-bit variable baud-rate, the parity bit is initialized for 0
#endif

//---------------------------------
        MOV     AUXR,   #40H            //T1 in 1T mode
        MOV     TMOD,   #20H            //T1 in mode2 (8-bit auto-reload timer/counter)
        MOV     TL1,    #0FBH           //set the preload value (256-18432000/32/115200)
        MOV     TH1,    #0FBH
        SETB    TR1                     //run T1
        SETB    ES                      //enable UART1 interrupt
        SETB    EA

        MOV     DPTR,   #TESTSTR
        LCALL   SENDSTRING

        SJMP    $
;-----------------------------------------
TESTSTR:
        DB  "STC15W4K32S4 Uart1 Test !",0DH,0AH,0

;/*---------------------------
;UART Interrupt Service Routine
;---------------------------*/
UART_ISR:
        PUSH    ACC
        PUSH    PSW
        JNB     RI,     CHECKTI
        CLR     RI                      //clear RI
        MOV     P0,     SBUF            //serial data is shown in P0
        MOV     C,      RB8
```

STC MCU Limited.

```
        MOV     P2.2,   C                       //P2.2 display parity bit
CHECKTI:
        JNB     TI,     ISR_EXIT
        CLR     TI                              //clear TI
        CLR     BUSY                            //clear busy flag
ISR_EXIT:
        POP     PSW
        POP     ACC
        RETI

;/*----------------------------
;Send UART data
;----------------------------*/
SENDDATA:
        JB      BUSY,   $                       //wait to finish sending the previous data
        MOV     ACC,    A                       //access to the parity bit ---- P (PSW.0)
        JNB     P,      EVEN1INACC
ODD1INACC:
#if (PARITYBIT == ODD_PARITY)
        CLR     TB8                             //the parity bit is set for 0
#elif (PARITYBIT == EVEN_PARITY)
        SETB    TB8                             //the parity bit is set for 1
#endif
        SJMP    PARITYBITOK
EVEN1INACC:
#if (PARITYBIT == ODD_PARITY)
        SETB    TB8                             //the parity bit is set for 1
#elif (PARITYBIT == EVEN_PARITY)
        CLR     TB8                             //the parity bit is set for 0
#endif
PARITYBITOK:
        SETB    BUSY
        MOV     SBUF,   A                       //write the data into SBUF of UART
        RET

;/*----------------------------
;Send string
//----------------------------*/
SENDSTRING:
        CLR     A
        MOVC    A,      @A+DPTR
        JZ      STRINGEND
        INC     DPTR
        LCALL   SENDDATA
        SJMP    SENDSTRING
STRINGEND:
        RET
//-----------------------------------------
        END
```

STC MCU Limited.

7.3.3.2 Demo Program using T1 to expand External Interrupt (Falling edge) —— T1 as 8-bit Auto-Relaod Counter (C and ASM)

;T1 Interrupt (falling edge) Demo programs, where T1 operated in Mode 2 (8-bit auto-relaod mode)
; The Timer Interrupt can not wake up MCU from Power-Down mode in the following programs

1.C Program Listing

```
/*---------------------------------------------------------------------------------------------------*/
/* --- STC MCU  Limited. ---------------------------------------------------------------------------*/
/* --- Exam Program using T1 to extend external interrupt (falling edge) ---------------------------*/
/* --- Mobile: (86)13922805190 ---------------------------------------------------------------------*/
/* --- Fax: 86-755-82905966 ------------------------------------------------------------------------*/
/* --- Tel: 86-755-82948412 ------------------------------------------------------------------------*/
/* --- Web: www.STCMCU.com -------------------------------------------------------------------------*/
/* If you want to use the program or the program referenced in the  ----------------------------*/
/* article, please specify in which data and procedures from STC    ----------------------------*/
/*---- In Keil C development environment, select the Intel 8052 to compiling ----------------*/
/*----  And only contain < reg51.h > as header file ------------------------------------------*/
/*---------------------------------------------------------------------------------------------------*/

//suppose the frequency of test chip is 18.432MHz

#include "reg51.h"

sfr AUXR = 0x8e;                        //Auxiliary register

//T1 interrupt service routine
void t1int( ) interrupt 3               //T1 interrupt (location at 001BH)
{
}

void main()
{
        AUXR = 0x40;                    //timer1 work in 1T mode
        TMOD = 0x60;                    //set timer1 as counter mode2 (8-bit auto-reload)
        TL1 = TH1 = 0xff;               //fill with 0xff to count one time
        TR1 = 1;                        //timer1 start run
        ET1 = 1;                        //enable T1 interrupt
        EA = 1;                         //open global interrupt switch

        while (1);
}
```

STC MCU Limited.

2. Assembler Listing

```
/*---------------------------------------------------------------------------------------------------------*/
/* --- STC MCU  Limited. ---------------------------------------------------------------------------------*/
/* --- Exam Program using T1 to extend external interrupt (falling edge) ---------------------------------*/
/* --- Mobile: (86)13922805190 ---------------------------------------------------------------------------*/
/* --- Fax: 86-755-82905966 ------------------------------------------------------------------------------*/
/* --- Tel: 86-755-82948412 ------------------------------------------------------------------------------*/
/* --- Web: www.STCMCU.com -------------------------------------------------------------------------------*/
/* If you want to use the program or the program referenced in the  ----------------------------*/
/* article, please specify in which data and procedures from STC    ----------------------------*/
/*---- In Keil C development environment, select the Intel 8052 to compiling ------------------*/
/*----  And only contain < reg51.h > as header file ------------------------------------------------*/
/*---------------------------------------------------------------------------------------------------------*/

//suppose the frequency of test chip is 18.432MHz

AUXR    DATA    08EH                    ;Auxiliary register

;-----------------------------------------
;interrupt vector table

        ORG     0000H
        LJMP    MAIN

        ORG     001BH                   ;T1 interrupt (location at 001BH)
        LJMP    T1INT

;-----------------------------------------
        ORG     0100H
MAIN:
        MOV     SP,     #7FH            ;initial SP
        MOV     AUXR,   #40H            ;timer1 work in 1T mode
        MOV     TMOD,   #60H            ;set timer1 as counter mode2 (8-bit auto-reload)
        MOV     A,      #0FFH
        MOV     TL1,    A               ;fill with 0xff to count one time
        MOV     TH1,    A
        SETB    TR1                     ;timer1 start run
        SETB    ET1                     ;enable T1 interrupt
        SETB    EA                      ;open global interrupt switch
        SJMP    $

;-----------------------------------------
;T1 interrupt service routine

T1INT:
        RETI

;-----------------------------------------

        END
```

STC MCU Limited.

7.4 Timer/Counter 2

Timer/Counter 2 only have one mode : 16-bit auto-reload timer/counter. Besides as Timer/Counter, T2 also can be as the baud-rate generator and programmable clock output.

7.4.1 Special Function Registers about Timer/Counter 2

Symbol	Description	Address	Bit Address and Symbol MSB LSB								Value after Power-on or Reset
T2H	The high 8-bit of Timer 2 register	D6H									0000 0000B
T2L	The low 8-bit of Timer 2 register	D7H									0000 0000B
AUXR	Auxiliary register	8EH	T0x12	T1x12	UART_M0x6	T2R	T2_C/$\overline{T}$	T2x12	EXTRAM	S1ST2	0000 0001B
INT_CLKO AUXR2	External Interrupt enable and Clock Output register	8FH	-	EX4	EX3	EX2	-	T2CLKO	T1CLKO	T0CLKO	x000 x000B
IE2	Interrupt Enable register	AFH	-	ET4	ET3	ES4	ES3	ET2	ESPI	ES2	x000 0000B

1. AUXR: Auxiliary register (Non bit-addressable)

SFR name	Address	bit	B7	B6	B5	B4	B3	B2	B1	B0
AUXR	8EH	name	T0x12	T1x12	UART_M0x6	T2R	T2_C/$\overline{T}$	T2x12	EXTRAM	S1ST2

B4 - T2R：Timer 2 Run control bit
- 0 ： not run Timer 2;
- 1 ： run Timer 2.

B3 - T2_C/$\overline{T}$: Counter or timer 2 selector
- 0 ： as Timer (namely count on internal system clock)
- 1 ： as Counter (namely count on the external pulse input from T2/P3.1)

B2 - T2x12 : Timer 2 clock source bit.
- 0 ： The clock source of Timer 2 is SYSclk/12.
- 1 ： The clock source of Timer 2 is SYSclk/1.

If T2 is used as the baud-rate generator of UART1 or UART2, T1x12 will decide whether UART1 or UART2 is 1T or 12T.

B0 - S1ST2 : the control bit that UART1 select Timer 2 as its baud-rate generator.
- 0 ： Select Timer 1 as the baud-rate generator of UART1
- 1 ： Select Timer 2 as the baud-rate generator of UART1. Timer 1 is released to use in other functions.

B7 - T0x12 : Timer 0 clock source bit.
- 0 ： The clock source of Timer 0 is SYSclk/12. It will compatible to the traditional 8051 MCU
- 1 ： The clock source of Timer 0 is SYSclk/1. It will drive the T0 faster than a traditional 8051 MCU

STC MCU Limited.

B6 - T1x12 : Timer 1 clock source bit.

0 : The clock source of Timer 1 is SYSclk/12. It will compatible to the traditional 8051 MCU

1 : The clock source of Timer 1 is SYSclk/1. It will drive the T0 faster than a traditional 8051 MCU

If T1 is used as the baud-rate generator of UART1, T1x12 will decide whether UART1 is 1T or 12T.

B5 - UART_M0x6 : Baud rate select bit of UART1 while it is working under Mode-0

0 : The baud-rate of UART in mode 0 is SYSclk/12.

1 : The baud-rate of UART in mode 0 is SYSclk/2.

B1 - EXTRAM : Internal / external RAM access control bit.

0 : On-chip auxiliary RAM is enabled.

1 : On-chip auxiliary RAM is always disabled.

STC MCU Limited.

2. T2 Clock Output control bit : T2CLKO

The ouput clock frequency of T2CLKO is controlled by Timer 2 which only has one mode (16-bit auto-reload timer/counter). Similarly, when T2 is used as programmable clcok output, it also don't enable thier interrupt to avoid CPU entering interrupt repeatly unless special circumstances.

INT_CLKO (AUXR2) : Clock Output and External Interrupt Enable register (Non bit-Addressable)

SFR Name	SFR Address	bit	B7	B6	B5	B4	B3	B2	B1	B0
INT_CLKO AUXR2	8FH	name	-	EX4	EX3	EX2	-	T2CLKO	T1CLKO	T0CLKO

B2 - T2CLKO : Whether is P3.0 configured for Timer 2(T2) programmable clock output T2CLKO or not.

1, P3.0 is configured for Timer2 programmable clock output T2CLKO, the clock output frequency = T2 overflow/2

If T2_ $C/\overline{T}$ = 0, namely Timer/Counter 2 count on the internal system clock,

When T2 in 1T mode (AUXR.2/T2x12=1), the output frequency = (SYSclk)/(65536-[RL_TH2, RL_TL2])/2

When T2 in 12T mode (AUXR.2/T2x12=0), the output frequency = (SYSclk) /12/ (65536-[RL_TH2, RL_TL2])/2

If T2_$C/\overline{T}$ = 1, namely Timer/Counter 2 count on the external pulse input from P3.1/T2,

the output frequency = (T2_Pin_CLK) / (65536-[RL_TH2, RL_TL2])/2

0, P3.0 is not configure for Timer 2 programmable clock output T2CLKO

B0 - T0CLKO : Whether is P3.5/T1 configured for Timer 0(T0) programmable clock output T0CLKO or not.

1, P3.5/T1 is configured for Timer0 programmable clock output T0CLKO, the clock output frequency = T0 overflow/2

If Timer/Counter 0 in mode 0 (16 bit auto-reloadable mode),

and if C/$\overline{T}$ = 0, namely Timer/Counter 0 count on the internal system clock,

When T0 in 1T mode (AUXR.7/T0x12=1), the output frequency = (SYSclk)/(65536-[RL_TH0, RL_TL0])/2

When T0 in 12T mode (AUXR.7/T0x12=0), the output frequency = (SYSclk) /12/ (65536-[RL_TH0, RL_TL0])/2

and if C/$\overline{T}$ = 1, namely Timer/Counter 0 count on the external pulse input from P3.4/T0,

the output frequency = (T0_Pin_CLK) / (65536-[RL_TH0, RL_TL0])/2

If Timer/Counter 0 in mode 2 (8 bit auto-reloadable mode),

and if C/$\overline{T}$ = 0, namely Timer/Counter 0 count on the internal system clock,

When T0 in 1T mode(AUXR.7/T0x12=1), the output frequency = (SYSclk) / (256-TH0) / 2

When T0 in 12T mode(AUXR.7/T0x12=0), the output frequency = (SYSclk) / 12 / (256-TH0) / 2

and if C/$\overline{T}$ = 1, namely Timer/Counter 0 count on the external pulse input from P3.4/T0,

the output frequency = (T0_Pin_CLK) / (256-TH0) / 2

0, P3.5/T1 is not configure for Timer 0 programmable clock output T0CLKO

B1 - T1CLKO : Whether is P3.4/T0 configured for Timer 1(T1) programmable clock output T1CLKO or not.

1, P3.4/T0 is configured for Timer1 programmable clock output T1CLKO, the clock output frequency = T1 overflow/2

If Timer/Counter 1 in mode 1 (16 bit auto-reloadable mode),

and if C/$\overline{T}$ = 0, namely Timer/Counter 1 count on the internal system clock,

When T1 in 1T mode (AUXR.6/T1x12=1), the output frequency = (SYSclk)/(65536-[RL_TH1, RL_TL1])/2

When T1 in 12T mode (AUXR.6/T1x12=0), the output frequency = (SYSclk) /12/ (65536-[RL_TH1, RL_TL1])/2

and if C/$\overline{T}$ = 1, namely Timer/Counter 1 count on the external pulse input from P3.5/T1,

the output frequency = (T1_Pin_CLK) / (65536-[RL_TH1, RL_TL1])/2

If Timer/Counter 1 in mode 2 (8 bit auto-reloadable mode),

and if C/$\overline{T}$ = 0, namely Timer/Counter 1 count on the internal system clock,

When T1 in 1T mode(AUXR.6/T1x12=1), the output frequency = (SYSclk) / (256-TH1) / 2

When T1 in 12T mode(AUXR.6/T1x12=0), the output frequency = (SYSclk) / 12 / (256-TH1) / 2

and if C/$\overline{T}$ = 1, namely Timer/Counter 1 count on the external pulse input from P3.5/T1,

the output frequency = (T1_Pin_CLK) / (256-TH1) / 2

0, P3.4/T0 is not configure for Timer 1 programmable clock output T1CLKO

B4 - EX2 : Enable bit of External Interrupt 2($\overline{INT2}$)

If EX2 = 0, External Interrupt 2 ($\overline{INT2}$) would be diabled.

If EX2 = 1, External Interrupt 2 ($\overline{INT2}$) would be enabled.

B5 - EX3 : Enable bit of External Interrupt 3($\overline{INT3}$)

If EX3 = 0, External Interrupt 3 ($\overline{INT3}$) would be diabled.

If EX3 = 1, External Interrupt 3 ($\overline{INT3}$) would be enabled.

B6 - EX4 : Enable bit of External Interrupt 4($\overline{INT4}$)

If EX4 = 0, External Interrupt 4 ($\overline{INT4}$) would be diabled.

If EX4 = 1, External Interrupt 4 ($\overline{INT4}$) would be enabled.

External Interrupt $\overline{INT2}$, $\overline{INT3}$ and $\overline{INT4}$ all only can generate interrupt on falling edge.

STC MCU Limited.

3. T2 Interrupt Enable bit : ET2

IE2: Interrupt Enable 2 Rsgister (Non bit-addressable)

SFR name	Address	bit	B7	B6	B5	B4	B3	B2	B1	B0
IE2	AFH	name	-	ET4	ET3	ES4	ES3	ET2	ESPI	ES2

ET4 : Timer 4 interrupt enable bit.
If ET4 = 0, Timer 4 interrupt would be diabled.
If ET4 = 1, Timer 4 interrupt would be enabled.

ET3 : Timer 3 interrupt enable bit.
If ET3 = 0, Timer 3 interrupt would be diabled.
If ET3 = 1, Timer 3 interrupt would be enabled.

ES4 : Serial Port 4 (UART4) interrupt enable bit.
If ES4 = 0, UART4 interrupt would be diabled.
If ES4 = 1, UART4 interrupt would be enabled.

ES3 : Serial Port 3 (UART3) interrupt enable bit.
If ES3 = 0, UART3 interrupt would be diabled.
If ES3 = 1, UART3 interrupt would be enabled.

ET2 : Timer 2 interrupt enable bit.
If ET2 = 0, Timer 2 interrupt would be diabled.
If ET2 = 1, Timer 2 interrupt would be enabled.

ESPI: SPI interrupt enalbe bit.
If ESPI = 0, SPI interrupt would be diabled.
If ESPI = 1, SPI interrupt would be enabled.

ES2 : Serial Port 2 (UART2) interrupt enable bit.
If ES2 = 0, UART2 interrupt would be diabled.
If ES2 = 1, UART2 interrupt would be enabled.

STC MCU Limited.

7.4.2 Timer/Counter 2 as 16-Bit Auto-Reload Timer/Counter

The schematic of Timer/Counter 2 is shown below :

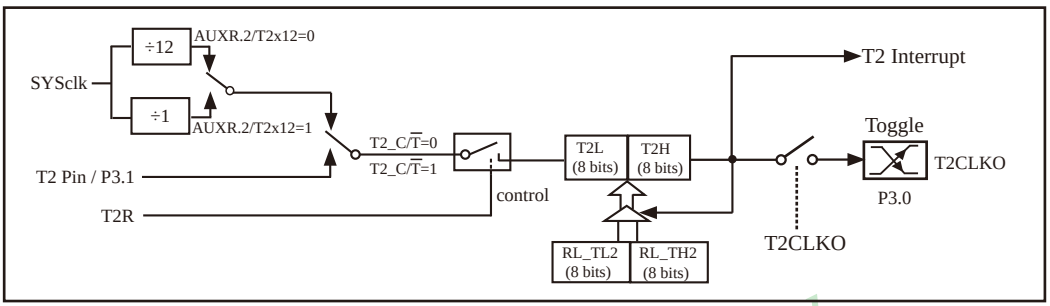

Timer/Counter 2 mode : 16-bit auto-reload timer/counter

The counted input is enabled to the timer when T2R = 1. T2R/AUXR.4 is a control bit in the Special Function Register AUXR.

If T2_C/$\overline{T}$ / AUXR.3 = 0, Timer/Counter 2 would be set for Timer operation (input from internal system clock). Howerver, if T2_C/$\overline{T}$ / AUXR.3 = 1, Timer/Counter 2 would be set for Counter operation (input from external T2/P3.1 pin).

In the “Timer” function, the timer register [T2L, T2H] is incremented every 12 system clocks or every system clock depending on AUXR.2(T2x12) bit. If T2x12 = 0, the register [T2L, T2H] will be incremented every 12 system clocks.If T2x12 = 1, the register [T2L, T2H] will be incremented every system clock.

There are two hidden registers RL_TH2 and RL_TL2 for Timer/Counter 2. the address of RL_TH2 is the same as T2H's. And, RL_TL2 and T2L share in the same address. When T2R = 0 disable Timer/Counter 2, the content written into register [T2L, T2H] will be written into [RL_TL2, RL_TH2] too. When T2R = 1 enable Timer/Counter 2, the content written into register [T2L, T2H] actually don not be writen into [T2L, T2H], but into [RL_TL2, RL_TH2]. When users read the content of [T2L, T2H], it is the content of [T2L, T2H] to read instead of [RL_TL2, RL_TH2].

The overflow from [T2L, T2H] will not only set the T2 interrupt request flag (which is invisible for users), but also reload [T2L, T2H] with the content of [RL_TL2, RL_TH2], which is preset by software. The reload leaves [RL_TL2, RL_TH2] unchanged.

STC MCU Limited.

7.4.2.1 Demo Program of 16-bit Auto-Reload Timer/Counter 2 (C and ASM)

1.C Program Listing

```
/*---------------------------------------------------------------------------------------------------*/
/* --- STC MCU  Limited. ---------------------------------------------------------------------------*/
/* --- Exam Program of 16-bit auto-reload timer/counter 2 ------------------------------------------*/
/* --- Mobile: (86)13922805190 ---------------------------------------------------------------------*/
/* --- Fax: 86-755-82905966 ------------------------------------------------------------------------*/
/* --- Tel: 86-755-82948412 ------------------------------------------------------------------------*/
/* --- Web: www.STCMCU.com -------------------------------------------------------------------------*/
/* If you want to use the program or the program referenced in the  ----------------------------*/
/* article, please specify in which data and procedures from STC    ----------------------------*/
/*---- In Keil C development environment, select the Intel 8052 to compiling ------------------*/
/*----  And only contain < reg51.h > as header file ---------------------------------------------*/
/*---------------------------------------------------------------------------------------------------*/

//suppose the frequency of test chip is 18.432MHz

#include "reg51.h"

typedef unsigned char BYTE;
typedef unsigned int WORD;

//-----------------------------------------------

/* define constants */
#define    FOSC 18432000L

#define    T38_4KHz          (256-18432000/12/38400/2)          //38.4KHz

/* define SFR */

sfr        IE2       =       0xAF;                              //(IE2.2)timer2 interrupt control bit
sfr        AUXR      =       0x8E;
sfr        T2H       =       0xD6;
sfr        T2H       =       0xD7;

sbit       TEST_PIN          =          P0^0;                   //test pin

//-----------------------------------------------

/* Timer2 interrupt routine */
void t2_isr() interrupt 12 using 1
{
           TEST_PIN =        !TEST_PIN;
}

//-----------------------------------------------
```

STC MCU Limited.

```
/* main program */
void main()
{
        T2L     =       T38_4KHz;                       //set timer2 reload value
        T2H     =       T38_4KH   >> 8;
        AUXR    |=      0x10;                           //timer2 start run
        IE2     |=      0x04;                           //enable timer2 interrupt
        EA      =       1;                              //open global interrupt switch

        while (1);                                      //loop
}
```

STC MCU Limited.

2. Assembler Listing

```
/*-------------------------------------------------------------------------------------------------*/
/* --- STC MCU  Limited. ---------------------------------------------------------------------------*/
/* --- Exam Program of 16-bit auto-reload timer/counter 2 ------------------------------------------*/
/* --- Mobile: (86)13922805190 ---------------------------------------------------------------------*/
/* --- Fax: 86-755-82905966 ------------------------------------------------------------------------*/
/* --- Tel: 86-755-82948412 ------------------------------------------------------------------------*/
/* --- Web: www.STCMCU.com -------------------------------------------------------------------------*/
/* If you want to use the program or the program referenced in the  ----------------------------*/
/* article, please specify in which data and procedures from STC    ----------------------------*/
/*---- In Keil C development environment, select the Intel 8052 to compiling ------------------*/
/*----  And only contain < reg51.h > as header file ---------------------------------------------*/
/*-------------------------------------------------------------------------------------------------*/

//suppose the frequency of test chip is 18.432MHz

IE2     DATA    0AFH                    //(IE2.2)timer2 interrupt control bit
AUXR    DATA    08EH                    //Auxiliary register
T2H     DATA    0D6H
T2L     DATA    0D7H

F38_4KHz        EQU     0FF10H          //38.4KHz(1T mode, 65536-18432000/2/38400)

//-----------------------------------------

        ORG     0000H
        LJMP    MAIN

        ORG     0063H
        LJMP    T2INT

//-----------------------------------------
```

```
        ORG     0100H
MAIN:
        MOV     SP,     #3FH

        ORL     AUXR,   #04H                    //T2 in 1T mode

        MOV     T2L,    #LOW F38_4KHz           //set timer2 reload value
        MOV     T2H,    #HIGH F38_4KHz

        ORL     AUXR,   #10H                    //T2 start to run

        ORL     IE2,    #04H                    //enable T2 interrupt

        SETB    EA

        SJMP    $

//-----------------------------------------
//Timer2 interrupt routine

T2INT:
        CPL   P1.0

//      ANL   IE2,      #0FBH

//      ORL   IE2,      #04H

        RETI

;-----------------------------------------

        END
```

STC MCU Limited.

7.4.2.2 Demo Program using T2 to expand External Interrupt (Falling edge)

—— T2 as 16-bit Auto-Relaod Counter (C and ASM)

1.C Program Listing

```
/*-------------------------------------------------------------------------------------------------*/
/* --- STC MCU  Limited. ---------------------------------------------------------------------------*/
/* --- Exam Program using T2 to extend external interrupt (falling edge) ---------------------*/
/* --- Mobile: (86)13922805190 ---------------------------------------------------------------------*/
/* --- Fax: 86-755-82905966 ------------------------------------------------------------------------*/
/* --- Tel: 86-755-82948412 ------------------------------------------------------------------------*/
/* --- Web: www.STCMCU.com -------------------------------------------------------------------------*/
/* If you want to use the program or the program referenced in the  ----------------------------*/
/* article, please specify in which data and procedures from STC    ----------------------------*/
/*---- In Keil C development environment, select the Intel 8052 to compiling ------------------*/
/*----  And only contain < reg51.h > as header file ---------------------------------------------*/
/*-------------------------------------------------------------------------------------------------*/

//suppose the frequency of test chip is 18.432MHz

#include "reg51.h"
#include "intrins.h"

//-----------------------------------------------
sfr     IE2     =     0xaf;                  //Interrupt enable register 2
sfr     AUXR    =     0x8e;                  //Auxiliary register
sfr     T2H     =     0xD6;
sfr     T2L     =     0xD7;

sbit    P10     =     P1^0;

//-----------------------------------------------
//Timer 2 Interrupt Service Routine
void t2int() interrupt 12                    //Timer 2 interrupt, location at 0063H
{
        P10     =     !P10;

//      IE2     &=    ~0x04;

//      IE2     |=    0x04;
}

void main()
{
        AUXR    |=    0x04;                  //T2 in 1T mode
```

STC MCU Limited.

```
    AUXR        |=      0x08;           //T2_C/T=1, T2(P3.1) as Clock Source
    T2H  = T2L  =       0xff;           //Set the initial value of T2
    AUXR        |=      0x10;           //start up T2

    IE2     |=      0x04;               //Enable T2 interrupt

    EA      =       1;

    while (1);
}
```

2.Assembler Listing

STC MCU Limited.

```
/*---------------------------------------------------------------------------------------------------*/
/* --- STC MCU  Limited. ---------------------------------------------------------------------------*/
/* --- Exam Program using T2 to extend external interrupt (falling edge) ---------------------------*/
/* --- Mobile: (86)13922805190 ----------------------------------------------------------------------*/
/* --- Fax: 86-755-82905966 -------------------------------------------------------------------------*/
/* --- Tel: 86-755-82948412 -------------------------------------------------------------------------*/
/* --- Web: www.STCMCU.com --------------------------------------------------------------------------*/
/* If you want to use the program or the program referenced in the  -----------------------------*/
/* article, please specify in which data and procedures from STC    -----------------------------*/
/*---- In Keil C development environment, select the Intel 8052 to compiling ----------------*/
/*----  And only contain < reg51.h > as header file ------------------------------------------*/
/*---------------------------------------------------------------------------------------------------*/

//suppose the frequency of test chip is 18.432MHz

IE2     DATA    0AFH                    //Interrupt enable register 2
AUXR    DATA    08EH                    //Auxiliary register
T2H     DATA    0D6H
T2L     DATA    0D7H

//----------------------------------------

        ORG     0000H
        LJMP    MAIN

        ORG     0063H                   //Timer 2 interrupt, location at 0063H
        LJMP    T2INT
//----------------------------------------

        ORG     0100H
```

```
MAIN:
        MOV     SP,     #3FH

        ORL     AUXR,   #04H            //T2 in 1T mode
        ORL     AUXR,   #08H            //T2_C/T=1, T2(P3.1) as Clock Source

        MOV     A,      #0FFH           //Set the initial value of T2
        MOV     T2L,    A
        MOV     T2H,    A

        ORL     AUXR,   #10H            //start up T2

        ORL     IE2,    #04H            //Enable T2 interrupt

        SETB    EA

        SJMP    $
//----------------------------------------
//Timer 2 Interrupt Service Routine

T2INT:
        CPL     P1.0

//      ANL     IE2,    #0FBH

//      ORL     IE2,    #04H

        RETI

;----------------------------------------

        END
```

STC MCU Limited.

7.4.3 Timer/Counter 2 Programmable Clock Output and Demo Program

The schematic of Timer/Counter 2 is shown below :

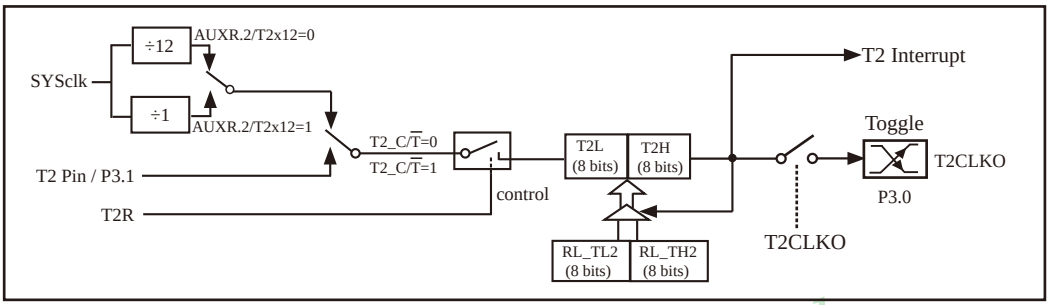

Timer/Counter 2 mode : 16-bit auto-reload timer/counter

Besides as Timer/Counter, T2 also can be as the programmable clock output. The ouput clock frequency of T2CLKO is controlled by Timer 2. When it is used as programmable clcok output, Timer 2 interrupt don't be enabled to avoid CPU entering interrupt repeatly unless special circumstances.

The clock output of T2CLKO/P3.0 is controlled by the bit T2CLKO of register INT_CLKO (AUXR2).

AUXR2.2 - T2CLKO : 1, enable clock output
0, disable clock output

INT_CLKO (AUXR2) (Address:8FH)

When T2CLKO/INT_CLKO.2=1, P3.0 is configured for Timer 2 programmable clock output T2CLKO.

The clock output frequency = T2 overflow/2

If T2_ $C/\overline{T}$ = 0, namely Timer/Counter 2 count on the internal system clock,

When T2 in 1T mode (AUXR.2/T2x12=1), the output frequency = (SYSclk)/(65536-[RL_TH2, RL_TL2])/2

When T2 in 12T mode (AUXR.2/T2x12=0), the output frequency = (SYSclk) /12/ (65536-[RL_TH2, RL_TL2])/2

If T2_ $C/\overline{T}$ = 1, namely Timer/Counter 2 count on the external pulse input from P3.1/T2,

the output frequency = (T2_Pin_CLK) / (65536-[RL_TH2, RL_TL2])/2

RL_TH2 is the reloaded register of **T2H, RL_TL2** is the reload register of T2L.

STC MCU Limited.

The following is the example program that Timer 2 output programmable clock by dividing the frequency of internal system clock or the clock input from external pin T2/P3.1 (C and assembly):

1. C Program Listing

```
/*---------------------------------------------------------------------------------------------------*/
/* --- STC MCU  Limited. ---------------------------------------------------------------------------*/
/* --- Exam Program of Timer 2 porgrammable clock output -------------------------------------------*/
/* --- Mobile: (86)13922805190 ---------------------------------------------------------------------*/
/* --- Fax: 86-755-82905966 ------------------------------------------------------------------------*/
/* --- Tel: 86-755-82948412 ------------------------------------------------------------------------*/
/* --- Web: www.STCMCU.com -------------------------------------------------------------------------*/
/* If you want to use the program or the program referenced in the  ----------------------------*/
/* article, please specify in which data and procedures from STC    ----------------------------*/
/*---- In Keil C development environment, select the Intel 8052 to compiling ------------------*/
/*----  And only contain < reg51.h > as header file ---------------------------------------------*/
/*---------------------------------------------------------------------------------------------------*/

//suppose the frequency of test chip is 18.432MHz

#include "reg51.h"

typedef unsigned char       BYTE;
typedef unsigned int        WORD;

#define FOSC 18432000L

//-----------------------------------------------

sfr         AUXR            = 0x8e;
sfr         INT_CLKO        = 0x8f;
sfr         T2H             = 0xD6;
sfr         T2L             = 0xD7;

sbit        T2CLKO          = P3^0;

#define     F38_4KHz        (65536-FOSC/2/38400)            //1T mode
//#define   F38_4KHz        (65536-FOSC/2/12/38400)         //12T mode

//-----------------------------------------------

void main()
{
            AUXR    |=      0x04;                           //Timer 2 in 1T mode
//          AUXR    &=      ~0x04;                          //Timer 2 in 12T mode
```

STC MCU Limited.

```
        AUXR    &=      ~0x08;          //T2_C/T=0, count on internal system clock
//      AUXR    |=      0x08;           //T2_C/T=1,  count on external pulse input from T2(P3.1) pin
        T2L     =       F38_4KHz;                       //Initial timing value
        T2H     =       F38_4KHz >> 8;

        AUXR    |=      0x10;
        INT_CLKO        =       0x04;

        while (1);
}
```

STC MCU Limited.

2. Assembler Listing

```
/*---------------------------------------------------------------------------------------------------*/
/* --- STC MCU  Limited. ---------------------------------------------------------------------------*/
/* --- Exam Program of Timer 2 porgrammable clock output -------------------------------------------*/
/* --- Mobile: (86)13922805190 ---------------------------------------------------------------------*/
/* --- Fax: 86-755-82905966 ------------------------------------------------------------------------*/
/* --- Tel: 86-755-82948412 ------------------------------------------------------------------------*/
/* --- Web: www.STCMCU.com -------------------------------------------------------------------------*/
/* If you want to use the program or the program referenced in the  ----------------------------*/
/* article, please specify in which data and procedures from STC    ----------------------------*/
/*---- In Keil C development environment, select the Intel 8052 to compiling ------------------*/
/*----  And only contain < reg51.h > as header file ---------------------------------------------*/
/*---------------------------------------------------------------------------------------------------*/

//suppose the frequency of test chip is 18.432MHz


AUXR            DATA    08EH
INT_CLKO        DATA    08FH
T2H             DATA    0D6H
T2L             DATA    0D7H

T2CLKO          BIT     P3.0

F38_4KHz        EQU     0FF10H          //38.4KHz(1T mode, 65536-18432000/2/38400)
//F38_4KHz      EQU     0FFECH          //38.4KHz(12T mode, (65536-18432000/2/12/38400)

//-----------------------------------------
```

```
        ORG     0000H
        LJMP    MAIN

//---------------------------------------

        ORG     0100H
MAIN:
        MOV     SP,     #3FH

        ORL     AUXR,   #04H                    //Timer 2 in 1T mode
//      ANL     AUXR,   #0FBH                   //Timer 2 in 12T mode

        ANL     AUXR,   #0F7H           //T2_C/T=0, count on internal system clock
//      ORL     AUXR,   #08H            //T2_C/T=1, count on external pulse input from T2(P3.1) pin

        MOV     T2L,    #LOW F38_4KHz           //Initial timing value
        MOV     T2H,    #HIGH F38_4KHz
        ORL     AUXR,   #10H
        MOV     INT_CLKO,   #04H

        SJMP    $

;---------------------------------------

        END
```

STC MCU Limited

7.4.4 Timer/Counter 2 as Baud-Rate Generator of Serial Port (UART)

Besides as Timer/Counter and programmable clock output, T2 also can be as the UART baud-rate generator. UART1 prefer to select Timer 2 as its baud-rate generator. UART2 only can choose Timer 2 as its its baud-rate generator. UART3 and UART4 defaut to selecting Timer 2 as their baud-rate generator.

When UART1 works in mode 1 (8-bit UART with variable baud-rate) and mode 3 (9-bit UART variable with baud-rate), its baud rate can be generated by T2. The Calculating Formula of buad-rate when UART1 select T2 as its baud-rate generator is shown below :

Baud-Rate of UART1 = (T2 overflow)/4. Note: the bau-rate is independent of SMOD bit.

If T2 works in 1T mode (AUXR.2/T2x12=1), the T2 overflow = SYSclk / (65536 - [RL_TH2, RL_TL2]) ;

So, Baud-Rate of UART1 = SYSclk / (65536 - [[RL_TH2, RL_TL2]) / 4

If T2 works in 12T mode (AUXR.2/T2x12=0), the T2 overflow = SYSclk / 12 / (65536 - [RL_TH2, RL_TL2]) ;

So, Baud-Rate of UART1 = SYSclk / 12 / (65536 - [[RL_TH2, RL_TL2]) / 4

UART2 only has two modes : mode 0 (8-bit UART variable with baud-rate) and mode 1 (9-bit UART variable with baud-rate). UART2 only can select Timer 2 as its baud-rate generator. The Calculating Formula of UART2 buad-rate is shown below :

Baud-Rate of UART2 = (T2 overflow)/4.

If T2 works in 1T mode (AUXR.2/T2x12=1), the T2 overflow = SYSclk / (65536 - [RL_TH2, RL_TL2]) ;

So, Baud-Rate of UART2 = SYSclk / (65536 - [[RL_TH2, RL_TL2]) / 4

If T2 works in 12T mode (AUXR.2/T2x12=0), the T2 overflow = SYSclk / 12 / (65536 - [RL_TH2, RL_TL2]) ;

So, Baud-Rate of UART2 = SYSclk / 12 / (65536 - [[RL_TH2, RL_TL2]) / 4

UART3 only has two modes : mode 0 (8-bit UART variable with baud-rate) and mode 1 (9-bit UART variable with baud-rate). UART3 either can select Timer 2 or Timer 3 as its baud-rate generator. It defaut to choosing Timer 2 as its baud-rate generator. The Calculating Formula of the buad-rate that UART3 select Timer 2 as its baud-rate generator is shown below :

Baud-Rate of UART3 = (T2 overflow)/4.

If T2 works in 1T mode (AUXR.2/T2x12=1), the T2 overflow = SYSclk / (65536 - [RL_TH2, RL_TL2]) ;

So, Baud-Rate of UART3 = SYSclk / (65536 - [[RL_TH2, RL_TL2]) / 4

If T2 works in 12T mode (AUXR.2/T2x12=0), the T2 overflow = SYSclk / 12 / (65536 - [RL_TH2, RL_TL2]) ;

So, Baud-Rate of UART3 = SYSclk / 12 / (65536 - [[RL_TH2, RL_TL2]) / 4

UART4 only has two modes : mode 0 (8-bit UART variable with baud-rate) and mode 1 (9-bit UART variable with baud-rate). UART4 either can select Timer 2 or Timer 4 as its baud-rate generator. It defaut to choosing Timer 2 as its baud-rate generator. The Calculating Formula of the buad-rate that UART4 select Timer 2 as its baud-rate generator is shown below :

Baud-Rate of UART4 = (T2 overflow)/4.

If T2 works in 1T mode (AUXR.2/T2x12=1), the T2 overflow = SYSclk / (65536 - [RL_TH2, RL_TL2]) ;

So, Baud-Rate of UART4 = SYSclk / (65536 - [[RL_TH2, RL_TL2]) / 4

If T2 works in 12T mode (AUXR.2/T2x12=0), the T2 overflow = SYSclk / 12 / (65536 - [RL_TH2, RL_TL2]) ;

So, Baud-Rate of UART4 = SYSclk / 12 / (65536 - [[RL_TH2, RL_TL2]) / 4

RL_TH2 is the reloaded register of **T2H, and RL_TL2** is the reload register of T2L in above formula.

STC MCU Limited.

7.4.4.1 Demo Program using Timer/Counter 2 as UART1 Baud-Rate Generator

1. C Program Listing

```
/*---------------------------------------------------------------------------------------------------*/
/* --- STC MCU  Limited. ---------------------------------------------------------------------------*/
/* --- Exam Program using Timer 2  as UART1 baud-rate generator ------------------------------------*/
/* --- Mobile: (86)13922805190 ---------------------------------------------------------------------*/
/* --- Fax: 86-755-82905966 ------------------------------------------------------------------------*/
/* --- Tel: 86-755-82948412 ------------------------------------------------------------------------*/
/* --- Web: www.STCMCU.com -------------------------------------------------------------------------*/
/* If you want to use the program or the program referenced in the  ----------------------------*/
/* article, please specify in which data and procedures from STC    ----------------------------*/
/*---- In Keil C development environment, select the Intel 8052 to compiling ----------------*/
/*----  And only contain < reg51.h > as header file ------------------------------------------*/
/*---------------------------------------------------------------------------------------------------*/

//suppose the frequency of test chip is 18.432MHz

#include "reg51.h"
#include "intrins.h"

typedef unsigned char   BYTE;
typedef unsigned int    WORD;

#define  FOSC    18432000L                      //System frequency
#define  BAUD    115200                         //UART1 baud-rate

#define  NONE_PARITY        0                   //none parity
#define  ODD_PARITY         1                   //odd parity
#define  EVEN_PARITY        2                   //even parity
#define  MARK_PARITY        3                   //mark parity
#define  SPACE_PARITY       4                   //space parity

#define PARITYBIT EVEN_PARITY                  //define the parity bit

sfr     AUXR    =       0x8e;                  //Auxiliary register
sfr     T2H     =       0xd6;
sfr     T2L     =       0xd7;

sbit    P22     =       P2^2;

bit busy;

void SendData(BYTE dat);
void SendString(char *s);
void main()
{
#if (PARITYBIT == NONE_PARITY)
```

STC MCU Limited.

```
        SCON    =       0x50;                           //8-bit variable baud-rate
#elif (PARITYBIT == ODD_PARITY) || (PARITYBIT == EVEN_PARITY) || (PARITYBIT == MARK_PARITY)
        SCON    =       0xda;                           //9-bit variable baud-rate,
                                                        //the parity bit is initialized for 1
#elif (PARITYBIT == SPACE_PARITY)
        SCON    =       0xd2;                           //9-bit variable baud-rate,
                                                        //the parity bit is initialized for 0
#endif

        T2L     =       (65536 - (FOSC/4/BAUD));        //Set the preload value
        T2H     =       (65536 - (FOSC/4/BAUD))>>8;
        AUXR    =       0x14;                           //T2 in 1T mode,  and run T2
        AUXR    |=      0x01;                           //select T2 as UART1 baud-rate generator
        ES      =       1;                              //enable UART1 interrupt
        EA      =       1;

        SendString("STC15W4K32S4\r\nUart Test !\r\n");
        while(1);
}

/*----------------------------
UART Interrupt Service Routine
----------------------------*/
void Uart() interrupt 4 using 1
{
        if (RI)
        {
                RI = 0;                                 //clear RI
                P0 = SBUF;                              //serial data is shown in P0
                P22 = RB8;                              //P2.2 display the parity bit
        }
        if (TI)
        {
                TI = 0;                                 //clear TI
                busy = 0;                               //clear busy flag
        }
}

/*----------------------------
Send UART data
----------------------------*/
void SendData(BYTE dat)
{
        while (busy);                                   //wait to finish sending the previous data
        ACC = dat;                                      //access to the parity bit ---- P (PSW.0)
        if (P)
        {
        #if (PARITYBIT == ODD_PARITY)
```

STC MCU Limited.

```
                TB8 = 0;                        //the parity bit is set for 0
        #elif (PARITYBIT == EVEN_PARITY)
                TB8 = 1;                        //the parity bit is set for 1
        #endif
        }
        else
        {
        #if (PARITYBIT == ODD_PARITY)
                TB8 = 1;                        //the parity bit is set for 1
        #elif (PARITYBIT == EVEN_PARITY)
                TB8 = 0;                        //the parity bit is set for 0
        #endif
         }
        busy = 1;
        SBUF = ACC;
}

/*---------------------------
Send string
---------------------------*/
void SendString(char *s)
{
        while (*s)
        {
                SendData(*s++);
        }
}
```

STC MCU Limited.

2. Assembler Listing

```
/*---------------------------------------------------------------------------------------------------*/
/* --- STC MCU  Limited. ---------------------------------------------------------------------------*/
/* --- Exam Program using Timer 2  as UART1 baud-rate generator ------------------------------------*/
/* --- Mobile: (86)13922805190 ---------------------------------------------------------------------*/
/* --- Fax: 86-755-82905966 ------------------------------------------------------------------------*/
/* --- Tel: 86-755-82948412 ------------------------------------------------------------------------*/
/* --- Web: www.STCMCU.com -------------------------------------------------------------------------*/
/* If you want to use the program or the program referenced in the  ----------------------------*/
/* article, please specify in which data and procedures from STC    ----------------------------*/
/*---- In Keil C development environment, select the Intel 8052 to compiling ------------------*/
/*----  And only contain < reg51.h > as header file ------------------------------------------------*/
/*---------------------------------------------------------------------------------------------------*/

//suppose the frequency of test chip is 18.432MHz

#define   NONE_PARITY   0                   //none parity
#define   ODD_PARITY    1                   //odd parity
#define   EVEN_PARITY   2                   //even parity
#define   MARK_PARITY   3                   //mark parity
#define   SPACE_PARITY  4                   //space parity

#define   PARITYBIT     EVEN_PARITY         //define the parity bit

//-----------------------------------------

AUXR    EQU     08EH                        //Auxiliary register
T2H     DATA    0D6H
T2L     DATA    0D7H

//-----------------------------------------
BUSY    BIT     20H.0
//-----------------------------------------
        ORG     0000H
        LJMP    MAIN

        ORG     0023H
        LJMP    UART_ISR
//-----------------------------------------
        ORG     0100H
MAIN:
        CLR     BUSY
        CLR     EA
        MOV     SP,     #3FH

#if (PARITYBIT == NONE_PARITY)
        MOV     SCON,   #50H                //8-bit variable baud-rate
#elif (PARITYBIT == ODD_PARITY) || (PARITYBIT == EVEN_PARITY) || (PARITYBIT == MARK_PARITY)
```

STC MCU Limited.

```
        MOV     SCON,   #0DAH                   //9-bit variable baud-rate
                                                //the parity bit is initialized for 1
#elif (PARITYBIT == SPACE_PARITY)
        MOV     SCON,   #0D2H                   //9-bit variable baud-rate
                                                //the parity bit is initialized for 0
#endif
//---------------------------------
        MOV     T2L,    #0D8H                   //Set the preload value (65536-18432000/4/115200)
        MOV     T2H,    #0FFH
        MOV     AUXR,   #14H                    //T2 in 1T mode,  and run T2
        ORL     AUXR,   #01H                    //select T2 as UART1 baud-rate generator
         SETB   ES                              //enable UART1 interrupt
        SETB    EA

        MOV     DPTR,   #TESTSTR
        LCALL   SENDSTRING

        SJMP    $
;----------------------------------------
TESTSTR:
        DB  "STC15W4K32S4 Uart1 Test !",0DH,0AH,0

;/*---------------------------
;UART Interrupt Service Routine
;---------------------------*/
UART_ISR:
        PUSH    ACC
        PUSH    PSW
        JNB     RI,     CHECKTI
        CLR     RI                              //clear RI
        MOV     P0,     SBUF                    //serial data is shown in P0
        MOV     C,      RB8
        MOV     P2.2,   C                       //P2.2 display the parity bit
CHECKTI:
        JNB     TI,     ISR_EXIT
        CLR     TI                              //clear TI
        CLR     BUSY                            //clear busy flag
ISR_EXIT:
        POP     PSW
        POP     ACC
        RETI

;/*---------------------------
;Send UART data
;---------------------------*/
SENDDATA:
        JB      BUSY,   $                       //wait to finish sending the previous data
        MOV     ACC,    A                       //access to the parity bit ---- P (PSW.0)
        JNB     P,      EVEN1INACC
```

STC MCU Limited.

```
ODD1INACC:
#if (PARITYBIT == ODD_PARITY)
        CLR     TB8                     //the parity bit is set for 0
#elif (PARITYBIT == EVEN_PARITY)
        SETB    TB8                     //the parity bit is set for 1
#endif
        SJMP    PARITYBITOK
EVEN1INACC:
#if (PARITYBIT == ODD_PARITY)
        SETB    TB8                     //the parity bit is set for 1
#elif (PARITYBIT == EVEN_PARITY)
        CLR     TB8                     //the parity bit is set for 0
#endif
PARITYBITOK:
        SETB    BUSY
        MOV     SBUF,   A
        RET

;/*----------------------------
;Send string
//----------------------------*/
SENDSTRING:
        CLR     A
        MOVC    A,      @A+DPTR
        JZ      STRINGEND
        INC     DPTR
        LCALL   SENDDATA
        SJMP    SENDSTRING
STRINGEND:
        RET
//-----------------------------------------
        END
```

STC MCU Limited.

7.4.4.2 Demo Program using Timer/Counter 2 as UART2 Baud-Rate Generator

1. C Program Listing

```
/*---------------------------------------------------------------------------------------------------*/
/* --- STC MCU  Limited. ---------------------------------------------------------------------------*/
/* --- Exam Program using Timer 2  as UART2 baud-rate generator ------------------------------------*/
/* --- Mobile: (86)13922805190 ---------------------------------------------------------------------*/
/* --- Fax: 86-755-82905966 ------------------------------------------------------------------------*/
/* --- Tel: 86-755-82948412 ------------------------------------------------------------------------*/
/* --- Web: www.STCMCU.com -------------------------------------------------------------------------*/
/* If you want to use the program or the program referenced in the  ----------------------------------*/
/* article, please specify in which data and procedures from STC    ----------------------------------*/
/*---- In Keil C development environment, select the Intel 8052 to compiling ----------------------*/
/*----  And only contain < reg51.h > as header file ------------------------------------------------*/
/*---------------------------------------------------------------------------------------------------*/

//suppose the frequency of test chip is 18.432MHz

#include "reg51.h"
#include "intrins.h"

typedef unsigned char   BYTE;
typedef unsigned int    WORD;

#define  FOSC  18432000L                  //System frequency
#define  BAUD  115200                     //UART2 baud-rate
#define  TM    (65536 - (FOSC/4/BAUD))

#define  NONE_PARITY   0                  //none parity
#define  ODD_PARITY    1                  //odd parity
#define  EVEN_PARITY   2                  //even parity
#define  MARK_PARITY   3                  //mark parity
#define  SPACE_PARITY  4                  //space parity

#define PARITYBIT EVEN_PARITY             //define the parity bit

sfr      AUXR  =  0x8e;                   //Auxiliary register
sfr      S2CON =  0x9a;                   //UART2 Control register
sfr      S2BUF =  0x9b;                   //UART2 data register
sfr      T2H   =  0xd6;
sfr      T2L   =  0xd7;
sfr      IE2   =  0xaf;                   //Interrupt Enable register 2

#define  S2RI  0x01                       //S2CON.0
#define  S2TI  0x02                       //S2CON.1
```

STC MCU Limited.

```
#define   S2RB8   0x04                  //S2CON.2
#define   S2TB8   0x08                  //S2CON.3

bit       busy;

void SendData(BYTE dat);
void SendString(char *s);

void main()
{
#if (PARITYBIT == NONE_PARITY)
        S2CON = 0x50;                           //8-bit variable baud-rate
#elif (PARITYBIT == ODD_PARITY) || (PARITYBIT == EVEN_PARITY) || (PARITYBIT == MARK_PARITY)
        S2CON = 0xda;                           //9-bit variable baud-rate
                                                //the parity bit is initialized for 1
#elif (PARITYBIT == SPACE_PARITY)
        S2CON = 0xd2;                           //9-bit variable baud-rate
                                                //the parity bit is initialized for 0
#endif

        T2L = TM;                               //Set the preload value
        T2H = TM>>8;
        AUXR = 0x14;                            //T2 in 1T mode,  and run T2
        IE2 = 0x01;                             //enable UART2 interrupt
        EA = 1;

        SendString("STC15W4K32S4\r\nUart2 Test !\r\n");
        while(1);
}

/*----------------------------
UART2 Interrupt Service Routine
----------------------------*/
void Uart2() interrupt 8 using 1
{
        if (S2CON & S2RI)
        {
                S2CON &= ~S2RI;                 //clear S2RI
                P0 = S2BUF;                     //serial data is shown in P0
                P2 = (S2CON & S2RB8);            //P2.2 display the parity bit
        }
        if (S2CON & S2TI)
        {
                S2CON &= ~S2TI;                 //clear S2TI
                busy = 0;                       //clear busy flag
        }
}
```

STC MCU Limited.

```
/*---------------------------
Send UART data
---------------------------*/
void SendData(BYTE dat)
{
        while (busy);                           //wait to finish sending the previous data
        ACC = dat;                              //access to the parity bit ---- P (PSW.0)
        if (P)
        {
        #if (PARITYBIT == ODD_PARITY)
                S2CON &= ~S2TB8;                //the parity bit is set for 0
        #elif (PARITYBIT == EVEN_PARITY)
                S2CON |= S2TB8;                 //the parity bit is set for 1
        #endif
        }
        else
        {
        #if (PARITYBIT == ODD_PARITY)
                S2CON |= S2TB8;                 //the parity bit is set for 1
        #elif (PARITYBIT == EVEN_PARITY)
                S2CON &= ~S2TB8;                //the parity bit is set for 0
        #endif
        }
        busy = 1;
        S2BUF = ACC;
}

/*---------------------------
Send sting
---------------------------*/
void SendString(char *s)
{
        while (*s)
        {
                SendData(*s++);
        }
}
```

STC MCU Limited.

2. Assembler Listing

```
/*---------------------------------------------------------------------------------------------------------*/
/* --- STC MCU  Limited. ---------------------------------------------------------------------------------*/
/* --- Exam Program using Timer 2  as UART2 baud-rate generator ------------------------------*/
/* --- Mobile: (86)13922805190 ---------------------------------------------------------------------------*/
/* --- Fax: 86-755-82905966 ------------------------------------------------------------------------------*/
/* --- Tel: 86-755-82948412 ------------------------------------------------------------------------------*/
/* --- Web: www.STCMCU.com -------------------------------------------------------------------------------*/
/* If you want to use the program or the program referenced in the  ------------------------------*/
/* article, please specify in which data and procedures from STC    ------------------------------*/
/*---- In Keil C development environment, select the Intel 8052 to compiling ------------------*/
/*----  And only contain < reg51.h > as header file ---------------------------------------------------*/
/*---------------------------------------------------------------------------------------------------------*/

//suppose the frequency of test chip is 18.432MHz
#define   NONE_PARITY       0     //none parity
#define   ODD_PARITY        1     //odd parity
#define   EVEN_PARITY       2     //even parity
#define   MARK_PARITY       3     //mark parity
#define   SPACE_PARITY      4     //space parity

#define   PARITYBIT EVEN_PARITY   //define the parity bit

//---------------------------------------

AUXR    EQU     08EH              //Auxiliary register
S2CON   EQU     09AH              //UART2 Control register
S2BUF   EQU     09BH              //UART2 data register
T2H     DATA    0D6H
T2L     DATA    0D7H
IE2     EQU     0AFH              //Interrupt Enable register 2

S2RI    EQU     01H               //S2CON.0
S2TI    EQU     02H               //S2CON.1
S2RB8   EQU     04H               //S2CON.2
S2TB8   EQU     08H               //S2CON.3
//---------------------------------------
BUSY    BIT     20H.0
//---------------------------------------
        ORG     0000H
        LJMP    MAIN

        ORG     0043H
        LJMP    UART2_ISR
```

STC MCU Limited.

```
//-----------------------------------------
        ORG     0100H
MAIN:
        CLR     BUSY
        CLR     EA
        MOV     SP,     #3FH
#if (PARITYBIT == NONE_PARITY)
        MOV     S2CON,  #50H                    //8-bit variable baud-rate
#elif (PARITYBIT == ODD_PARITY) || (PARITYBIT == EVEN_PARITY) || (PARITYBIT == MARK_PARITY)
        MOV     S2CON,  #0DAH                   //9-bit variable baud-rate
                                                //the parity bit is initialized for 1
#elif (PARITYBIT == SPACE_PARITY)
        MOV     S2CON,  #0D2H                   //9-bit variable baud-rate
                                                //the parity bit is initialized for 0
#endif

//---------------------------------
        MOV     T2L,    #0D8H                   //Set the preload value (65536-18432000/4/115200)
        MOV     T2H,    #0FFH
        MOV     AUXR,   #14H                    //T2 in 1T mode,  and run T2
        ORL     IE2,    #01H                    //enable UART2 interrupt
        SETB    EA

        MOV     DPTR,   #TESTSTR
        LCALL   SENDSTRING

        SJMP    $
;------------------------------------------
TESTSTR:
        DB  "STC15W4K32S4 Uart2 Test !",0DH,0AH,0

;/*---------------------------
;UART2 Interrupt Service Routine
;---------------------------*/
UART2_ISR:
        PUSH    ACC
        PUSH    PSW
        MOV     A,      S2CON                   ;read the content of S2CON
        JNB     ACC.0,  CHECKTI
        ANL     S2CON,  #NOT S2RI               ;clear S2RI
         MOV    P0,     S2BUF                   ;serial data is shown in P0
        ANL     A,      #S2RB8                  ;
        MOV      P2,    A                       ;P2.2 display the parity bit
CHECKTI:                        ;
        MOV     A,      S2CON                   ;read the content of S2CON
        JNB     ACC.1,  ISR_EXIT
        ANL     S2CON,  #NOT S2TI               ;clear S2RI
        CLR     BUSY                            ;clear busy flag
```

STC MCU Limited.

```
ISR_EXIT:
        POP     PSW
        POP     ACC
        RETI

;/*----------------------------
;Send UART data
;----------------------------*/
SENDDATA:
        JB      BUSY,   $                       //wait to finish sending the previous data
        MOV     ACC,    A                       //access to the parity bit ---- P (PSW.0)
        JNB     P,      EVEN1INACC
ODD1INACC:
#if (PARITYBIT == ODD_PARITY)
        ANL     S2CON,  #NOT S2TB8              //the parity bit is set for 0
#elif (PARITYBIT == EVEN_PARITY)
        ORL     S2CON,  #S2TB8                  //the parity bit is set for 1
#endif
        SJMP    PARITYBITOK
EVEN1INACC:
#if (PARITYBIT == ODD_PARITY)
        ORL     S2CON,  #S2TB8                  //the parity bit is set for 1
#elif (PARITYBIT == EVEN_PARITY)
        ANL     S2CON,  #NOT S2TB8              //the parity bit is set for 0
#endif
PARITYBITOK:
        SETB    BUSY
        MOV     S2BUF,  A
        RET

;/*----------------------------
;Send sting
//----------------------------*/
SENDSTRING:
        CLR     A
        MOVC    A,      @A+DPTR
        JZ      STRINGEND
        INC     DPTR
        LCALL   SENDDATA
        SJMP    SENDSTRING
STRINGEND:
        RET
//-----------------------------------------
        END
```

STC MCU Limited.

7.5 Timer/Counter 3 and Timer/Counter 4

Another two 16-bit timers/counters also are added to STC15W4K32S4 series MCU : Timer/Counter 3 and Timer/Counter 4. Just like T2, T3 and T4 all only have one mode : 16-bit auto-reload timer/counter. Besides as Timer/Counter, T3 and T4 also can be as the baud-rate generator and programmable clock output.

7.5.1 Special Function Registers about Timer/Counter 3 and 4

Symbol	Description	Address	Bit Address and Symbol MSB LSB								Value after Power-on or Reset
T4T3M	T4 and T3 Control and Mode register	D1H	T4R	T4_C/$\overline{T}$	T4x12	T4CLKO	T3R	T3_C/$\overline{T}$	T3x12	T3CLKO	0000 0000B
T4H	The high 8-bit of Timer 4 register	D2H									0000 0000B
T4L	The low 8-bit of Timer 4 register	D3H									0000 0000B
T3H	The high 8-bit of Timer 3 register	D4H									0000 0000B
T3L	The low 8-bit of Timer 3 register	D5H									0000 0000B
IE2	Interrupt Enable register	AFH	-	ET4	ET3	ES4	ES3	ET2	ESPI	ES2	x000 0000B

STC MCU Limited.

1. T4T3M : Timer 4 and Timer 3 Mode register (Non bit-addressable)

SFR name	Address	bit	B7	B6	B5	B4	B3	B2	B1	B0
T4T3M	D1H	name	T4R	T4_C/$\overline{T}$	T4x12	T4CLKO	T3R	T3_C/$\overline{T}$	T3x12	T3CLKO

B7 - T4R：Timer 4 Run control bit
0 ： not run Timer 4;
1 ： run Timer 4.

B6 - T4_C/$\overline{T}$: Counter or timer 4 selector
0 ： as Timer (namely count on internal system clock)
1 ： as Counter (namely count on the external pulse input from T4/P0.7)

B5 - T4x12 : Timer 4 clock source bit.
0 ： The clock source of Timer 4 is SYSclk/12.
1 ： The clock source of Timer 4 is SYSclk/1.

B4 - T4CLKO : Whether is P0.6 configured for Timer 4(T4) programmable clock output T4CLKO or not.

1, P0.6 is configured for Timer 4 programmable clock output T4CLKO, the clock output frequency = T4 overflow/2
If T4_ C/$\overline{T}$ = 0, namely Timer/Counter 4 count on the internal system clock,
When T4 in 1T mode (T4T3.5/T4x12=1), the output frequency = (SYSclk)/(65536-[RL_TH4, RL_TL4])/2
When T4 in 12T mode (T4T3.5/T4x12=0), the output frequency = (SYSclk) /12/ (65536-[RL_TH4, RL_TL4])/2
If T4_C/$\overline{T}$ = 1, namely Timer/Counter 4 count on the external pulse input from P0.7/T4,
the output frequency = (T4_Pin_CLK) / (65536-[RL_TH4, RL_TL4])/2

0, P0.6 is not configure for Timer 4 programmable clock output T4CLKO

B3 - T3R：Timer 3 Run control bit
0 ： not run Timer 3;
1 ： run Timer 3.

B2 - T3_C/$\overline{T}$: Counter or timer 3 selector
0 ： as Timer (namely count on internal system clock)
1 ： as Counter (namely count on the external pulse input from T3/P0.5)

B1 - T3x12 : Timer 3 clock source bit.
0 ： The clock source of Timer 3 is SYSclk/12.
1 ： The clock source of Timer 3 is SYSclk/1.

B0 - T3CLKO : Whether is P0.4 configured for Timer 3(T3) programmable clock output T3CLKO or not.

1, P0.4 is configured for Timer 3 programmable clock output T3CLKO, the clock output frequency = T3 overflow / 2

If T3_ C/$\overline{T}$ = 0, namely Timer/Counter 3 count on the internal system clock,

When T3 in 1T mode (T4T3.1/T3x12=1), the output frequency = (SYSclk)/(65536-[RL_TH3, RL_TL3])/2
When T3 in 12T mode (T4T3.1/T3x12=0), the output frequency = (SYSclk) /12/ (65536-[RL_TH3, RL_TL3])/2

If T3_C/$\overline{T}$ = 1, namely Timer/Counter 3 count on the external pulse input from P0.5/T3,

the output frequency = (T3_Pin_CLK) / (65536-[RL_TH3, RL_TL3])/2

0, P0.4 is not configure for Timer 3 programmable clock output T3CLKO

2. T3 and T4 Interrupt Enable Register : IE2

IE2: Interrupt Enable 2 Rsgister (Non bit-addressable)

SFR name	Address	bit	B7	B6	B5	B4	B3	B2	B1	B0
IE2	AFH	name	-	ET4	ET3	ES4	ES3	ET2	ESPI	ES2

ET4 : Timer 4 interrupt enable bit.
If ET4 = 0, Timer 4 interrupt would be diabled.
If ET4 = 1, Timer 4 interrupt would be enabled.

ET3 : Timer 3 interrupt enable bit.
If ET3 = 0, Timer 3 interrupt would be diabled.
If ET3 = 1, Timer 3 interrupt would be enabled.

ES4 : Serial Port 4 (UART4) interrupt enable bit.
If ES4 = 0, UART4 interrupt would be diabled.
If ES4 = 1, UART4 interrupt would be enabled.

ES3 : Serial Port 3 (UART3) interrupt enable bit.
If ES3 = 0, UART3 interrupt would be diabled.
If ES3 = 1, UART3 interrupt would be enabled.

ET2 : Timer 2 interrupt enable bit.
If ET2 = 0, Timer 2 interrupt would be diabled.
If ET2 = 1, Timer 2 interrupt would be enabled.

ESPI: SPI interrupt enalbe bit.
If ESPI = 0, SPI interrupt would be diabled.
If ESPI = 1, SPI interrupt would be enabled.

ES2 : Serial Port 2 (UART2) interrupt enable bit.
If ES2 = 0, UART2 interrupt would be diabled.
If ES2 = 1, UART2 interrupt would be enabled.

STC MCU Limited

7.5.2 Timer/Counter 3

T3 only has one mode : 16-bit auto-reload timer/counter. T3 either can be as Timer/Counter or as the baud-rate generator or programmable clock output.

7.5.2.1 Timer/Counter 3 as 16-Bit Auto-Reload Timer/Counter

The schematic of Timer/Counter 3 is shown below :

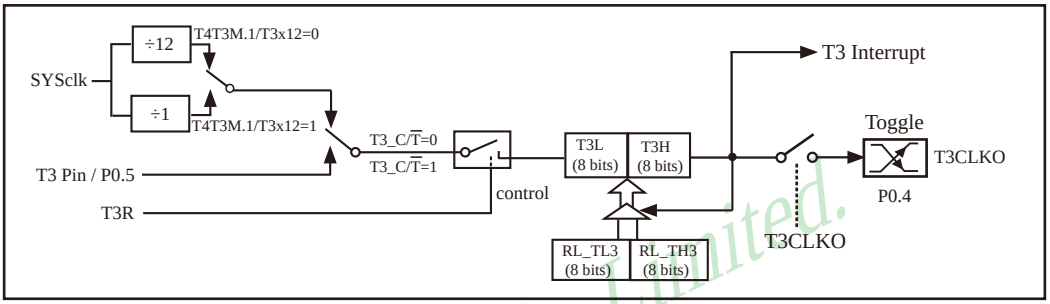

Timer/Counter 3 mode : 16-bit auto-reload timer/counter

The counted input is enabled to the timer when T3R = 1. T3R/T4T3M.3 is a control bit in the Special Function Register T4T3M.

If T3_C/$\overline{T}$ / T4T3M.2 = 0, Timer/Counter 3 would be set for Timer operation (input from internal system clock). Howerver, if T3_C/$\overline{T}$ / T4T3M.2 = 1, Timer/Counter 3 would be set for Counter operation (input from external T3/P0.5 pin).

In the “Timer” function, the timer register [T3L, T3H] is incremented every 12 system clocks or every system clock depending on T4T3M.1(T3x12) bit. If T3x12 = 0, the register [T3L, T3H] will be incremented every 12 system clocks. If T3x12 = 1, the register [T3L, T3H] will be incremented every system clock.

There are two hidden registers RL_TH3 and RL_TL3 for Timer/Counter 3. the address of RL_TH3 is the same as T3H's. And, RL_TL3 and T3L share in the same address. When T3R = 0 disable Timer/Counter 3, the content written into register [T3L, T3H] will be written into [RL_TL3, RL_TH3] too. When T3R = 1 enable Timer/Counter 3, the content written into register [T3L, T3H] actually don not be writen into [T3L, T3H], but into [RL_TL3, RL_TH3]. When users read the content of [T3L, T3H], it is the content of [T3L, T3H] to read instead of [RL_TL3, RL_TH3].

The overflow from [T3L, T3H] will not only set the T3 interrupt request flag (which is invisible for users), but also reload [T3L, T3H] with the content of [RL_TL3, RL_TH3], which is preset by software. The reload leaves [RL_TL3, RL_TH3] unchanged.

STC MCU Limited.

7.5.2.2 Timer/Counter 3 Programmable Clock Output

The schematic of Timer/Counter 3 is shown below :

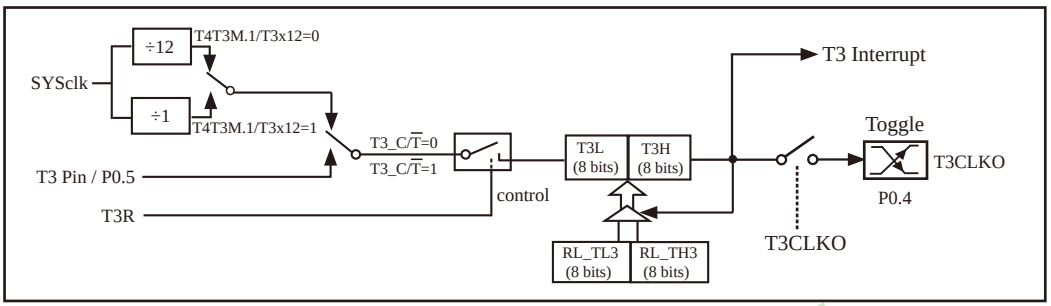

Timer/Counter 3 mode : 16-bit auto-reload timer/counter

Besides as Timer/Counter, T3 also can be as the programmable clock output. The ouput clock frequency of T3CLKO is controlled by Timer 3. When it is used as programmable clcok output, Timer 3 interrupt don't be enabled to avoid CPU entering interrupt repeatly unless special circumstances.

The clock output of T3CLKO/P0.4 is controlled by the bit T3CLKO of register T4T3M.

T4T3M.0 - T3CLKO : 1, enable clock output
0, disable clock output

T4T3M(Address:D1H)

When T3CLKO/T4T3M.0=1, P0.4 is configured for Timer 3 programmable clock output T3CLKO.

The clock output frequency = T3 overflow/2

If T3_ $C/\overline{T}$ = 0, namely Timer/Counter 3 count on the internal system clock,

When T3 in 1T mode (T4T3.1/T3x12=1), the output frequency = (SYSclk)/(65536-[RL_TH3, RL_TL3])/2

When T3 in 12T mode (T4T3.1/T3x12=0), the output frequency = (SYSclk) /12/ (65536-[RL_TH3, RL_TL3])/2

If T3_ $C/\overline{T}$ = 1, namely Timer/Counter 3 count on the external pulse input from P0.5/T3,

the output frequency = (T3_Pin_CLK) / (65536-[RL_TH3, RL_TL3])/2

RL_TH3 is the reloaded register of **T3H, RL_TL3** is the reload register of T3L.

STC MCU Limited.

7.5.2.3 Timer/Counter 3 as Baud-Rate Generator of Serial Port 3 (UART3)

Besides as Timer/Counter and programmable clock output, T3 also can be as the UART3 baud-rate generator. UART3 defauts to selecting Timer 2 as their baud-rate generator. But it also can select Timer 3 as its baud-rate generator by setting S3ST3/S3CON.6.

S3CON : Serial Port 3 Control Register

SFR name	Address	bit	B7	B6	B5	B4	B3	B2	B1	B0
S3CON	ACH	name	S3SM0	S3ST3	S3SM2	S3REN	S3TB8	S3RB8	S3TI	S3RI

S3ST3 : the control bit whether UART3 choose T3 as its baud-rate generator or not.

0, Choose T2 as UART3 baud-rate generator

1, Choose T3 as UART3 baud-rate generator

UART3 only has two modes : mode 0 (8-bit UART variable with baud-rate) and mode 1 (9-bit UART variable with baud-rate). UART3 either can select Timer 2 or Timer 3 as its baud-rate generator. When UART3 select Timer 3 as its baud-rate generator, the Calculating Formula is shown below :

Baud-Rate of UART3 = (T3 overflow)/4.

If T3 works in 1T mode (T4T3M.1/T3x12=1), the T3 overflow = SYSclk / (65536 - [RL_TH3, RL_TL3]) ;

So, Baud-Rate of UART3 = SYSclk / (65536 - [[RL_TH3, RL_TL3]) / 4

If T3 works in 12T mode (T4T3M.1/T3x12=0), the T3 overflow = SYSclk / 12 / (65536 - [RL_TH3, RL_TL3]) ;

So, Baud-Rate of UART3 = SYSclk / 12 / (65536 - [[RL_TH3, RL_TL3]) / 4

RL_TH3 is the reloaded register of T3H, and RL_TL3 is the reload register of T3L in above formula.

STC MCU Limited.

7.5.3 Timer/Counter 4

T4 only has one mode : 16-bit auto-reload timer/counter. T4 either can be as Timer/Counter or as the baud-rate generator or programmable clock output.

7.5.3.1 Timer/Counter 4 as 16-Bit Auto-Reload Timer/Counter

The schematic of Timer/Counter 4 is shown below :

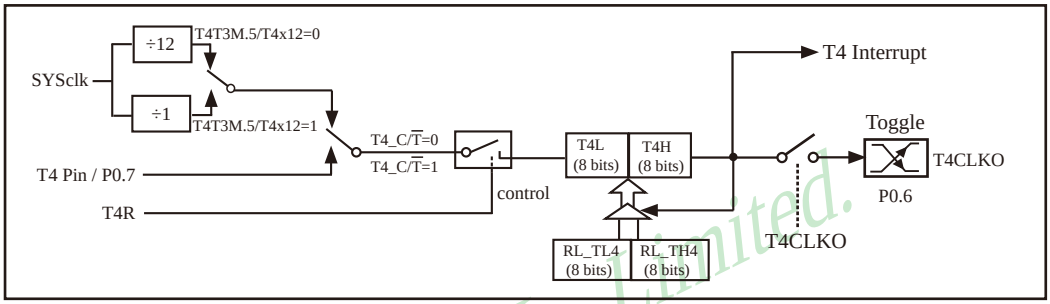

Timer/Counter 4 mode : 16-bit auto-reload timer/counter

The counted input is enabled to the timer when T4R = 1. T4R/T4T3M.7 is a control bit in the Special Function Register T4T3M.

If T4_C/$\overline{T}$ / T4T3M.6 = 0, Timer/Counter 4 would be set for Timer operation (input from internal system clock). Howerver, if T4_C/$\overline{T}$ / T4T3M.6 = 1, Timer/Counter 4 would be set for Counter operation (input from external T4/P0.7 pin).

In the “Timer” function, the timer register [T4L, T4H] is incremented every 12 system clocks or every system clock depending on T4T3M.5 (T4x12) bit. If T4x12 = 0, the register [T4L, T4H] will be incremented every 12 system clocks. If T4x12 = 1, the register [T4L, T4H] will be incremented every system clock.

There are two hidden registers RL_TH4 and RL_TL4 for Timer/Counter 4. the address of RL_TH4 is the same as T4H's. And, RL_TL4 and T4L share in the same address. When T4R = 0 disable Timer/Counter 3, the content written into register [T4L, T4H] will be written into [RL_TL4, RL_TH4] too. When T4R = 1 enable Timer/Counter 4, the content written into register [T4L, T4H] actually don not be writen into [T4L, T4H], but into [RL_TL4, RL_TH4]. When users read the content of [T4L, T4H], it is the content of [T4L, T4H] to read instead of [RL_TL4, RL_TH4].

The overflow from [T4L, T4H] will not only set the T4 interrupt request flag (which is invisible for users), but also reload [T4L, T4H] with the content of [RL_TL4, RL_TH4], which is preset by software. The reload leaves [RL_TL4, RL_TH4] unchanged.

STC MCU Limited.

7.5.3.2 Timer/Counter 4 Programmable Clock Output

The schematic of Timer/Counter 4 is shown below :

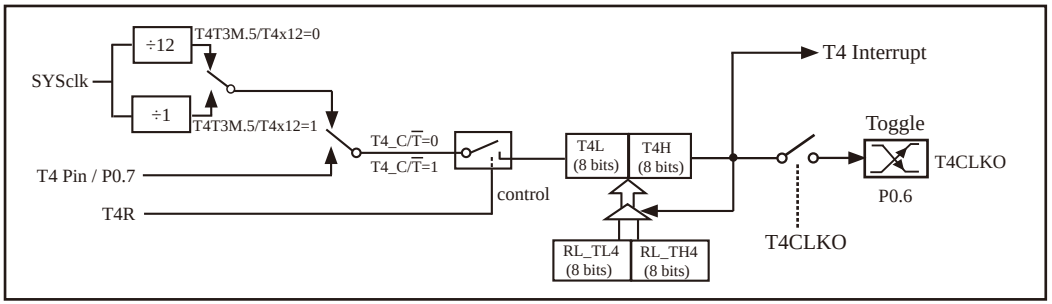

Timer/Counter 4 mode : 16-bit auto-reload timer/counter

Besides as Timer/Counter, T4 also can be as the programmable clock output. The ouput clock frequency of T4CLKO is controlled by Timer 4. When it is used as programmable clock output, Timer 4 interrupt don't be enabled to avoid CPU entering interrupt repeatly unless special circumstances.

The clock output of T4CLKO/P0.6 is controlled by the bit T4CLKO of register T4T3M.

T4T3M.4 - T4CLKO : 1, enable clock output
0, disable clock output

T4T3M(Address:D1H)

When T4CLKO/T4T3M.4=1, P0.6 is configured for Timer 4 programmable clock output T4CLKO.

The clock output frequency = T4 overflow/2

If T4_ C/$\overline{T}$ = 0, namely Timer/Counter 4 count on the internal system clock,

When T4 in 1T mode (T4T3.5/T4x12=1), the output frequency = (SYSclk)/(65536-[RL_TH4, RL_TL4])/2

When T4 in 12T mode (T4T3.5/T4x12=0), the output frequency = (SYSclk) /12/ (65536-[RL_TH4, RL_TL4])/2

If T4_C/$\overline{T}$ = 1, namely Timer/Counter 4 count on the external pulse input from P0.7/T4,

the output frequency = (T4_Pin_CLK) / (65536-[RL_TH4, RL_TL4])/2

RL_TH4 is the reloaded register of **T4H, RL_TL4** is the reload register of T4L.

STC MCU Limited.

7.5.3.3 Timer/Counter 4 as Baud-Rate Generator of Serial Port 4 (UART4)

Besides as Timer/Counter and programmable clock output, T4 also can be as the UART4 baud-rate generator. UART4 defauts to selecting Timer 2 as their baud-rate generator. But it also can select Timer 4 as its baud-rate generator by setting S4ST4/S4CON.6.

S4CON : Serial Port 4 Control Register

SFR name	Address	bit	B7	B6	B5	B4	B3	B2	B1	B0
S4CON	84H	name	S4SM0	S4ST4	S4SM2	S4REN	S4TB8	S4RB8	S4TI	S4RI

S4ST4 : the control bit whether UART4 choose T4 as its baud-rate generator or not.

0, Choose T2 as UART4 baud-rate generator

1, Choose T4 as UART4 baud-rate generator

UART4 only has two modes : mode 0 (8-bit UART variable with baud-rate) and mode 1 (9-bit UART variable with baud-rate). UART4 either can select Timer 2 or Timer 4 as its baud-rate generator. When UART4 select Timer 4 as its baud-rate generator, the Calculating Formula is shown below :

Baud-Rate of UART4 = (T4 overflow)/4.

If T4 works in 1T mode (T4T3M.5/T4x12=1), the T4 overflow = SYSclk / (65536 - [RL_TH4, RL_TL4]) ;

So, Baud-Rate of UART4 = SYSclk / (65536 - [[RL_TH4, RL_TL4]) / 4

If T4 works in 12T mode (T4T3M.5/T4x12=0), the T4 overflow = SYSclk / 12 / (65536 - [RL_TH4, RL_TL4]) ;

So, Baud-Rate of UART4 = SYSclk / 12 / (65536 - [[RL_TH4, RL_TL4]) / 4

RL_TH4 is the reloaded register of T4H, and RL_TL4 is the reload register of T4L in above formula.

STC MCU Limited.

7.6 How to Increase T0/T1/T2/T3/T4 Speed by 12 times

1. The speed control bits of T0/T1/T2 : T0x12 / T1x12 / T2x12

AUXR: Auxiliary register (Non bit-addressable)

SFR name	Address	bit	B7	B6	B5	B4	B3	B2	B1	B0
AUXR	8EH	name	T0x12	T1x12	UART_M0x6	T2R	T2_C/$\overline{T}$	T2x12	EXTRAM	S1ST2

B7 - T0x12 : Timer 0 clock source bit.
0 : The clock source of Timer 0 is SYSclk/12. It will compatible to the traditional 8051 MCU
1 : The clock source of Timer 0 is SYSclk/1. It will drive the T0 faster than a traditional 8051 MCU

B6 - T1x12 : Timer 1 clock source bit.
0 : The clock source of Timer 1 is SYSclk/12. It will compatible to the traditional 8051 MCU
1 : The clock source of Timer 1 is SYSclk/1. It will drive the T0 faster than a traditional 8051 MCU
If T1 is used as the baud-rate generator of UART1, T1x12 will decide whether UART1 is 1T or 12T.

B2 - T2x12 : Timer 2 clock source bit.
0 : The clock source of Timer 2 is SYSclk/12.
1 : The clock source of Timer 2 is SYSclk/1.
If T2 is used as the baud-rate generator of UART1 or UART2, T1x12 will decide whether UART1 or UART2 is 1T or 12T.

STC MCU Limited

B5 - UART_M0x6 : Baud rate select bit of UART1 while it is working under Mode-0
0 : The baud-rate of UART in mode 0 is SYSclk/12.
1 : The baud-rate of UART in mode 0 is SYSclk/2.

B4 - T2R: Timer 2 Run control bit
0 : not run Timer 2;
1 : run Timer 2.

B3 - T2_C/$\overline{T}$: Counter or timer 2 selector
0 : as Timer (namely count on internal system clock)
1 : as Counter (namely count on the external pulse input from T2/P3.1)

B1 - EXTRAM : Internal / external RAM access control bit.
0 : On-chip auxiliary RAM is enabled.
1 : On-chip auxiliary RAM is always disabled.

B0 - S1ST2 : the control bit that UART1 select Timer 2 as its baud-rate generator.
0 : Select Timer 1 as the baud-rate generator of UART1
1 : Select Timer 2 as the baud-rate generator of UART1. Timer 1 is released to use in other functions.

2. The speed control bits of T4/T3 : T4x12 / T3x12

T4T3M : Timer 4 and Timer 3 Mode register (Non bit-addressable)

SFR name	Address	bit	B7	B6	B5	B4	B3	B2	B1	B0
T4T3M	D1H	name	T4R	T4_C/$\overline{T}$	T4x12	T4CLKO	T3R	T3_C/$\overline{T}$	T3x12	T3CLKO

B5 - T4x12 : Timer 4 clock source bit.
0 : The clock source of Timer 4 is SYSclk/12.
1 : The clock source of Timer 4 is SYSclk/1.

B1 - T3x12 : Timer 3 clock source bit.
0 : The clock source of Timer 3 is SYSclk/12.
1 : The clock source of Timer 3 is SYSclk/1.

B7 - T4R： Timer 4 Run control bit
0 : not run Timer 4;
1 : run Timer 4.

B6 - T4_C/$\overline{T}$: Counter or timer 4 selector
0 : as Timer (namely count on internal system clock)
1 : as Counter (namely count on the external pulse input from T4/P0.7)

B4 - T4CLKO : Whether is P0.6 configured for Timer 4(T4) programmable clock output T4CLKO or not.

1, P0.6 is configured for Timer 4 programmable clock output T4CLKO, the clock output frequency = T4 overflow/2
If T4_ C/$\overline{T}$ = 0, namely Timer/Counter 4 count on the internal system clock,
When T4 in 1T mode (T4T3.5/T4x12=1), the output frequency = (SYSclk)/(65536-[RL_TH4, RL_TL4])/2
When T4 in 12T mode (T4T3.5/T4x12=0), the output frequency = (SYSclk) /12/ (65536-[RL_TH4, RL_TL4])/2
If T4_C/$\overline{T}$ = 1, namely Timer/Counter 4 count on the external pulse input from P0.7/T4,
the output frequency = (T4_Pin_CLK) / (65536-[RL_TH4, RL_TL4])/2

0, P0.6 is not configure for Timer 4 programmable clock output T4CLKO

B3 - T3R： Timer 3 Run control bit
0 : not run Timer 3;
1 : run Timer 3.

B2 - T3_C/$\overline{T}$: Counter or timer 3 selector
0 : as Timer (namely count on internal system clock)
1 : as Counter (namely count on the external pulse input from T3/P0.5)

B0 - T3CLKO : Whether is P0.4 configured for Timer 3(T3) programmable clock output T3CLKO or not.

1, P0.4 is configured for Timer 3 programmable clock output T3CLKO, the clock output frequency = T3 overflow / 2
If T3_ C/$\overline{T}$ = 0, namely Timer/Counter 3 count on the internal system clock,
When T3 in 1T mode (T4T3.1/T3x12=1), the output frequency = (SYSclk)/(65536-[RL_TH3, RL_TL3])/2
When T3 in 12T mode (T4T3.1/T3x12=0), the output frequency = (SYSclk) /12/ (65536-[RL_TH3, RL_TL3])/2
If T3_C/$\overline{T}$ = 1, namely Timer/Counter 3 count on the external pulse input from P0.5/T3,
the output frequency = (T3_Pin_CLK) / (65536-[RL_TH3, RL_TL3])/2

0, P0.4 is not configure for Timer 3 programmable clock output T3CLKO

STC MCU Limited.

7.7 Programmable Clock Output (or as Frequency Divider)

STC15 series MCU have six channel programmable clock outputs (such as STC15W4K32S4 series), at most. They are Master clock output MCLKO/P5.4, Timer 0 programmable clock output T0CLKO/P3.5, Timer 1 programmable clock output T1CLKO/P3.4, Timer 2 programmable clock output T2CLKO/P3.0, Timer 3 programmable clock output T3CLKO/P0.4, Timer 4 programmable clock output T4CLKO/P0.6. The speed of external programmable clock output is also not more than 13.5MHz, because the output speed of I/O port of STC15 series MCU is not more than 13.5MHz.

The programmable clock output types of STC15 series MCU are summarized as shown in the following table.

Programmable clock output / MCU Type	Master clock output (MCLKO/P5.4)	Timer 0 clock output (T0CLKO/P3.5)	Timer 0 clock output (T1CLKO/P3.4)	Timer 0 clock output (**T2CLKO/P3.0**)	Timer 0 clock output (T3CLKO/P0.4)	Timer 0 clock output (T4CLKO/P0.6)
STC15F101W series	Master clock output of this seies is on MCLKO/P3.4	√		√		
STC15W10x series	Master clock output of this seies is on MCLKO/P3.4	√		√		
STC15W201S series	√	√		√		
STC15F408AD series	√	√		√		
STC15W401AS series	√ (In addition, the master clock output of this series also could be set on MCLKO_2/P1.6)	√		√		
STC15W404S series	√ (In addition, the master clock output of this series also could be set on MCLKO_2/P1.6)	√	√	√		
STC15F1K16S series	√ (In addition, the master clock output of this series also could be set on MCLKO_2/ XTAL2/P1.6)	√	√	√		
STC15F2K60S2 series	√	√	√	√		
STC15W4K32S4 series	√ (In addition, the master clock output of this series also could be set on MCLKO_2/ XTAL2/P1.6)	√	√	√	√	√

√ means the corresponding series MCU have the corresponding programmable clock output.

STC MCU Limited.

7.7.1 Special Function Registers Related to Programmable Clock Output

Symbol	Description	Address	Bit Address and Symbol MSB LSB								Value after Power-on or Reset
AUXR	Auxiliary register	8EH	T0x12	T1x12	UART_M0x6	T2R	T2_C/$\overline{T}$	T2x12	EXTRAM	S1ST2	0000 0001B
INT_CLKO AUXR2	External Interrupt enable and Clock output register	8FH	-	EX4	EX3	EX2	-	T2CLKO	T1CLKO	T0CLKO	x000 x000B
CLK_DIV (PCON2)	Clock Division register	97H	MCKO_S1	MCKO_S1	ADRJ	Tx_Rx	MCLKO_2	CLKS2	CLKS1	CLKS0	0000 0000B
T4T3M	Timer 4 and Timer 3 Mode register	D1H	T4R	T4_C/$\overline{T}$	T4x12	T4CLKO	T3R	T3_C/$\overline{T}$	T3x12	T3CLKO	0000 0000B

The satement (used in C language) of Special function registers INT_CLKO/AUXR/CLK_DIV/T4T3M:

```
sfr     INT_CLKO    =   0x8F;     //The address statement of special function register INT_CLKO
sfr     AUXR        =   0x8E;     //The address statement of Special function register AUXR
sfr     CLK_DIV     =   0x97;     //The address statement of Special function register CLK_DIV
sfr     T4T3M       =   0xD1;     //The address statement of Special function register T4T3M
```

The satement (used in Assembly language) of Special function registers INT_CLKO/AUXR/CLK_DIV/T4T3M:

```
INT_CLKO    EQU     8FH     ;The address statement of special function register INT_CLKO
AUXR        EQU     8EH     ;The address statement of Special function register AUXR
CLK_DIV     EQU     97H     ;The address statement of Special function register CLK_DIV
T4T3M       EQU     D1H     ;The address statement of Special function register T4T3M
```

1. CLK_DIV (PCON2) : Clock Division register(Non bit addressable)

SFR Name	SFR Address	bit	B7	B6	B5	B4	B3	B2	B1	B0
CLK_DIV (PCON2)	97H	name	MCKO_S1	MCKO_S0	ADRJ	Tx_Rx	MCLKO_2	CLKS2	CLKS1	CLKS0

MCKO_S1	MCKO_S0	the control bit of master clock output by dividing the frequency (The master clock can either be internal R/C clock or the external input clock or the external crystal oscillator)
0	0	Master clock do not output external clock
0	1	Master clock output external clock，but its frequency do not be divided，and the output clock frequency = MCLK / 1
1	0	Master clock output external clock，but its frequency is divided by 2，and the output clock frequency = MCLK / 2
1	1	Master clock output external clock，but its frequency is divided by 4，and the output clock frequency = MCLK / 4

The master clock can either be internal R/C clock or the external input clock or the external crystal oscillator.
MCLK is the frequency of master clock.

STC15F2K60S2 series MCU output master clock on MCLKO/P5.4

It is on MCLKO/P3.4 that the Programmable clock output of master clock of STC15 series 8-pin MCU (such as STC15F101W series). However, it is on MCLKO/P5.4 that the Programmable clock output of master clock of other STC15 series MCU including 16-pin or more than 16-pin MCU.

MCLKO_2：to select Master Clock output on where

0：Master Clock output on MCLKO/P5.4

1：Master Clock output on MCLKO_2/XTAL2/P1.6

The master clock can either be internal R/C clock or the external input clock or the external crystal oscillator.

STC MCU Limited

1. CLK_DIV (PCON2) : Clock Division register(Non bit addressable)

SFR Name	SFR Address	bit	B7	B6	B5	B4	B3	B2	B1	B0
CLK_DIV (PCON2)	97H	name	MCKO_S1	MCKO_S0	ADRJ	Tx_Rx	MCLKO_2	CLKS2	CLKS1	CLKS0

ADRJ：the adjustment bit of ADC result

0：ADC_RES[7:0] store high 8-bit ADC result，ADC_RESL[1:0] store low 2-bit ADC result

1：ADC_RES[1:0] store high 2-bit ADC result，ADC_RESL[7:0] store low 8-bit ADC result

Tx_Rx：the set bit of relay and broadcast mode of UART1

0：UART1 works on normal mode

1：UART1 works on relay and broadcast mode，that to say output the input level state of RxD port to the outside TxD pin in real time, namely the external output of TxD pin can reflect the input level state of RxD port.

the RxD and TxD of UART1 can be switched in 3 groups of pins: [RxD/P3.0, TxD/P3.1];
[RxD_2/P3.6, TxD_2/P3.7];
[RxD_3/P1.6, TxD_3/P1.7].

CLKS2	CLKS1	CLKS0	the control bit of system clock (System clock refers to the master clock that has been divided frequency, which is offered to CPU, UARTs, SPI, Timers, CCP/PWM/PCA and A/D Converter)
0	0	0	Master clock frequency/1, No division
0	0	1	Master clock frequency/2
0	1	0	Master clock frequency/4
0	1	1	Master clock frequency/8
1	0	0	Master clock frequency/16
1	0	1	Master clock frequency/32
1	1	0	Master clock frequency/64
1	1	1	Master clock frequency/128

The master clock can either be internal R/C clock or the external input clock or the external crystal oscillator.

2. INT_CLKO (AUXR2) : External Interrupt Enable and Clock Output register

SFR Name	SFR Address	bit	B7	B6	B5	B4	B3	B2	B1	B0
INT_CLKO AUXR2	8FH	name	-	EX4	EX3	EX2	-	T2CLKO	T1CLKO	T0CLKO

B0 - T0CLKO : Whether is P3.5/T1 configured for Timer 0(T0) programmable clock output T0CLKO or not.

1, P3.5/T1 is configured for Timer0 programmable clock output T0CLKO, the clock output frequency = T0 overflow/2

If Timer/Counter 0 in mode 0 (16 bit auto-reloadable mode),

and if C/$\overline{T}$ = 0, namely Timer/Counter 0 count on the internal system clock,

When T0 in 1T mode (AUXR.7/T0x12=1), the output frequency = (SYSclk)/(65536-[RL_TH0, RL_TL0])/2

When T0 in 12T mode (AUXR.7/T0x12=0), the output frequency = (SYSclk) /12/ (65536-[RL_TH0, RL_TL0])/2

and if C/$\overline{T}$ = 1, namely Timer/Counter 0 count on the external pulse input from P3.4/T0,

the output frequency = (T0_Pin_CLK) / (65536-[RL_TH0, RL_TL0])/2

If Timer/Counter 0 in mode 2 (8 bit auto-reloadable mode),

and if C/$\overline{T}$ = 0, namely Timer/Counter 0 count on the internal system clock,

When T0 in 1T mode(AUXR.7/T0x12=1), the output frequency = (SYSclk) / (256-TH0) / 2

When T0 in 12T mode(AUXR.7/T0x12=0), the output frequency = (SYSclk) / 12 / (256-TH0) / 2

and if C/$\overline{T}$ = 1, namely Timer/Counter 0 count on the external pulse input from P3.4/T0,

the output frequency = (T0_Pin_CLK) / (256-TH0) / 2

0, P3.5/T1 is not configure for Timer 0 programmable clock output T0CLKO

2. INT_CLKO (AUXR2) : External Interrupt Enable and Clock Output register

SFR Name	SFR Address	bit	B7	B6	B5	B4	B3	B2	B1	B0
INT_CLKO AUXR2	8FH	name	-	EX4	EX3	EX2	-	T2CLKO	T1CLKO	T0CLKO

B1 - T1CLKO : Whether is P3.4/T0 configured for Timer 1(T1) programmable clock output T1CLKO or not.

1, P3.4/T0 is configured for Timer1 programmable clock output T1CLKO, the clock output frequency = T1 overflow/2

If Timer/Counter 1 in mode 1 (16 bit auto-reloadable mode),

and if C/$\overline{T}$ = 0, namely Timer/Counter 1 count on the internal system clock,

When T1 in 1T mode (AUXR.6/T1x12=1), the output frequency = (SYSclk)/(65536-[RL_TH1, RL_TL1])/2

When T1 in 12T mode (AUXR.6/T1x12=0), the output frequency = (SYSclk) /12/ (65536-[RL_TH1, RL_TL1])/2

and if C/$\overline{T}$ = 1, namely Timer/Counter 1 count on the external pulse input from P3.5/T1,

the output frequency = (T1_Pin_CLK) / (65536-[RL_TH1, RL_TL1])/2

If Timer/Counter 1 in mode 2 (8 bit auto-reloadable mode),

and if C/$\overline{T}$ = 0, namely Timer/Counter 1 count on the internal system clock,

When T1 in 1T mode(AUXR.6/T1x12=1), the output frequency = (SYSclk) / (256-TH1) / 2

When T1 in 12T mode(AUXR.6/T1x12=0), the output frequency = (SYSclk) / 12 / (256-TH1) / 2

and if C/$\overline{T}$ = 1, namely Timer/Counter 1 count on the external pulse input from P3.5/T1,

the output frequency = (T1_Pin_CLK) / (256-TH1) / 2

0, P3.4/T0 is not configure for Timer 1 programmable clock output T1CLKO

B2 - T2CLKO : Whether is P3.0 configured for Timer 2(T2) programmable clock output T2CLKO or not.

1, P3.0 is configured for Timer2 programmable clock output T2CLKO, the clock output frequency = T2 overflow/2

If T2_ C/$\overline{T}$ = 0, namely Timer/Counter 2 count on the internal system clock,

When T2 in 1T mode (AUXR.2/T2x12=1), the output frequency = (SYSclk)/(65536-[RL_TH2, RL_TL2])/2

When T2 in 12T mode (AUXR.2/T2x12=0), the output frequency = (SYSclk) /12/ (65536-[RL_TH2, RL_TL2])/2

If T2_C/$\overline{T}$ = 1, namely Timer/Counter 2 count on the external pulse input from P3.1/T2,

the output frequency = (T2_Pin_CLK) / (65536-[RL_TH2, RL_TL2])/2

0, P3.0 is not configure for Timer 2 programmable clock output T2CLKO

B4 - EX2 : Enable bit of External Interrupt 2($\overline{INT2}$)

B5 - EX3 : Enable bit of External Interrupt 3($\overline{INT3}$)

B6 - EX4 : Enable bit of External Interrupt 4($\overline{INT4}$)

3. AUXR : Auxiliary register (Address:8EH, Non bit-addressable)

SFR name	Address	bit	B7	B6	B5	B4	B3	B2	B1	B0
AUXR	8EH	name	T0x12	T1x12	UART_M0x6	T2R	T2_C/$\overline{T}$	T2x12	EXTRAM	S1ST2

B7 - T0x12 : Timer 0 clock source bit.

0 : The clock source of Timer 0 is SYSclk/12. It will compatible to the traditional 8051 MCU

1 : The clock source of Timer 0 is SYSclk/1. It will drive the T0 faster than a traditional 8051 MCU

B6 - T1x12 : Timer 1 clock source bit.

0 : The clock source of Timer 1 is SYSclk/12. It will compatible to the traditional 8051 MCU

1 : The clock source of Timer 1 is SYSclk/1. It will drive the T0 faster than a traditional 8051 MCU

If T1 is used as the baud-rate generator of UART1, T1x12 will decide whether UART1 is 1T or 12T.

STC MCU Limited

3. **AUXR : Auxiliary register** (Address:8EH, Non bit-addressable)

SFR name	Address	bit	B7	B6	B5	B4	B3	B2	B1	B0
AUXR	8EH	name	T0x12	T1x12	UART_M0x6	T2R	T2_C/$\overline{T}$	T2x12	EXTRAM	S1ST2

B5 - UART_M0x6 : Baud rate select bit of UART1 while it is working under Mode-0
0 : The baud-rate of UART in mode 0 is SYSclk/12.
1 : The baud-rate of UART in mode 0 is SYSclk/2.

B4 - T2R: Timer 2 Run control bit
0 : not run Timer 2;
1 : run Timer 2.

B3 - T2_C/$\overline{T}$: Counter or timer 2 selector
0 : as Timer (namely count on internal system clock)
1 : as Counter (namely count on the external pulse input from T2/P3.1)

B2 - T2x12 : Timer 2 clock source bit.
0 : The clock source of Timer 2 is SYSclk/12.
1 : The clock source of Timer 2 is SYSclk/1.
If T2 is used as the baud-rate generator of UART1 or UART2, T1x12 will decide whether UART1 or UART2 is 1T or 12T.

B1 - EXTRAM : Internal / external RAM access control bit.
0 : On-chip auxiliary RAM is enabled.
1 : On-chip auxiliary RAM is always disabled.

B0 - S1ST2 : the control bit that UART1 select Timer 2 as its baud-rate generator.
0 : Select Timer 1 as the baud-rate generator of UART1
1 : Select Timer 2 as the baud-rate generator of UART1. Timer 1 is released to use in other functions.

STC MCU Limited.

4. T4T3M : Timer 4 and Timer 3 Mode register (Non bit-addressable)

SFR name	Address	bit	B7	B6	B5	B4	B3	B2	B1	B0
T4T3M	D1H	name	T4R	T4_C/$\overline{T}$	T4x12	T4CLKO	T3R	T3_C/$\overline{T}$	T3x12	T3CLKO

B7 - T4R: Timer 4 Run control bit
0 : not run Timer 4;
1 : run Timer 4.

B6 - T4_C/$\overline{T}$: Counter or timer 4 selector
0 : as Timer (namely count on internal system clock)
1 : as Counter (namely count on the external pulse input from T4/P0.7)

B5 - T4x12 : Timer 4 clock source bit.
0 : The clock source of Timer 4 is SYSclk/12.
1 : The clock source of Timer 4 is SYSclk/1.

4. T4T3M : Timer 4 and Timer 3 Mode register (Non bit-addressable)

SFR name	Address	bit	B7	B6	B5	B4	B3	B2	B1	B0
T4T3M	D1H	name	T4R	T4_C/$\overline{T}$	T4x12	T4CLKO	T3R	T3_C/$\overline{T}$	T3x12	T3CLKO

B4 - T4CLKO : Whether is P0.6 configured for Timer 4(T4) programmable clock output T4CLKO or not.

1, P0.6 is configured for Timer 4 programmable clock output T4CLKO, the clock output frequency = T4 overflow/2

If T4_ C/$\overline{T}$ = 0, namely Timer/Counter 4 count on the internal system clock,

When T4 in 1T mode (T4T3.5/T4x12=1), the output frequency = (SYSclk)/(65536-[RL_TH4, RL_TL4])/2

When T4 in 12T mode (T4T3.5/T4x12=0), the output frequency = (SYSclk) /12/ (65536-[RL_TH4, RL_TL4])/2

If T4_C/$\overline{T}$ = 1, namely Timer/Counter 4 count on the external pulse input from P0.7/T4,

the output frequency = (T4_Pin_CLK) / (65536-[RL_TH4, RL_TL4])/2

0, P0.6 is not configure for Timer 4 programmable clock output T4CLKO

B3 - T3R： Timer 3 Run control bit

0 ： not run Timer 3;

1 ： run Timer 3.

B2 - T3_C/$\overline{T}$: Counter or timer 3 selector

0 ： as Timer (namely count on internal system clock)

1 ： as Counter (namely count on the external pulse input from T3/P0.5)

B1 - T3x12 : Timer 3 clock source bit.

0 ： The clock source of Timer 3 is SYSclk/12.

1 ： The clock source of Timer 3 is SYSclk/1.

B0 - T3CLKO : Whether is P0.4 configured for Timer 3(T3) programmable clock output T3CLKO or not.

1, P0.4 is configured for Timer 3 programmable clock output T3CLKO, the clock output frequency = T3 overflow / 2

If T3_ C/$\overline{T}$ = 0, namely Timer/Counter 3 count on the internal system clock,

When T3 in 1T mode (T4T3.1/T3x12=1), the output frequency = (SYSclk)/(65536-[RL_TH3, RL_TL3])/2

When T3 in 12T mode (T4T3.1/T3x12=0), the output frequency = (SYSclk) /12/ (65536-[RL_TH3, RL_TL3])/2

If T3_C/$\overline{T}$ = 1, namely Timer/Counter 3 count on the external pulse input from P0.5/T3,

the output frequency = (T3_Pin_CLK) / (65536-[RL_TH3, RL_TL3])/2

0, P0.4 is not configure for Timer 3 programmable clock output T3CLKO

STC MCU Limited.

7.7.2 Master Clock Output and Demo Program(C and ASM)

The master clock can either be internal R/C clock or the external input clock or the external crystal oscillator. The speed of external programmable clock output of 5V MCU is also not more than 13.5MHz, because the output speed of I/O port of STC15 series 5V MCU is not more than 13.5MHz. The speed of external programmable clock output of 3.3V MCU is also not more than 8MHz, because the output speed of I/O port of STC15 series 3.3V MCU is not more than 8MHz.

CLK_DIV (PCON2) : Clock Division Register (Non bit-addressable)

SFR Name	SFR Address	bit	B7	B6	B5	B4	B3	B2	B1	B0
CLK_DIV (PCON2)	97H	name	MCKO_S1	MCKO_S0	ADRJ	Tx_Rx	MCLKO_2	CLKS2	CLKS1	CLKS0

How to output clock by using MCLKO/P5.4 or MCLKO_2/XTAL2/P1.6.

The clock output of MCLKO/P5.4 or MCLKO_2/XTAL2/P1.6 is controlled by the bits MCKO_S1 and MCKO_S0 of register CLK_DIV. MCLKO/P5.4 or MCLKO_2/XTAL2/P1.6 can be configured for master clcok output whose frequency also can be choose by setting MCKO_S1 (CLK_DIV.7) and MCKO_S0 (CLK_DIV.6).

MCKO_S1	MCKO_S0	the control bit of master clock output by dividing the frequency (The master clock can either be internal R/C clock or the external input clock or the external crystal oscillator)
0	0	Master clock do not output external clock
0	1	Master clock output external clock，but its frequency do not be divided，and the output clock frequency = MCLK / 1
1	0	Master clock output external clock，but its frequency is divided by 2，and the output clock frequency = MCLK / 2
1	1	Master clock output external clock，but its frequency is divided by 4，and the output clock frequency = MCLK / 4

The master clock can either be internal R/C clock or the external input clock or the external crystal oscillator. MCLK is the frequency of master clock.

STC15F2K60S2 series MCU output master clock on MCLKO/P5.4

It is on MCLKO/P3.4 that the Programmable clock output of master clock of STC15 series 8-pin MCU (such as STC15F101W series). However, it is on MCLKO/P5.4 that the Programmable clock output of master clock of other STC15 series MCU including 16-pin or more than 16-pin MCU.

The speed of external programmable clock output of 5V MCU is also not more than 13.5MHz, because the output speed of I/O port of STC15 series 5V MCU is not more than 13.5MHz.

The speed of external programmable clock output of 3.3V MCU is also not more than 8MHz, because the output speed of I/O port of STC15 series 3.3V MCU is not more than 8MHz.

STC MCU Limited

the following is the demo program of Master clock output:

1. C Program Listing

```
/*---------------------------------------------------------------------------------------------------*/
/* --- STC MCU Limited. ----------------------------------------------------------------------------*/
/* --- Exam Program of Master clock output ---------------------------------------------------------*/
/* --- Mobile: (86)13922805190 ---------------------------------------------------------------------*/
/* --- Fax: 86-755-82905966 ------------------------------------------------------------------------*/
/* --- Tel: 86-755-82948412 ------------------------------------------------------------------------*/
/* --- Web: www.STCMCU.com -------------------------------------------------------------------------*/
/* If you want to use the program or the program referenced in the  ----------------------------*/
/* article, please specify in which data and procedures from STC    ----------------------------*/
/*---- In Keil C development environment, select the Intel 8052 to compiling ------------------*/
/*----  And only contain < reg51.h > as header file ---------------------------------------------*/
/*---------------------------------------------------------------------------------------------------*/

//suppose the frequency of test chip is 18.432MHz

#include "reg51.h"

typedef   unsigned char     BYTE;
typedef   unsigned int      WORD;

#define   FOSC    18432000L
//-----------------------------------------
sfr       CLK_DIV       =       0x97;           //Clock divider register

//-----------------------------------------

void main()
{
          CLK_DIV       =       0x40;            //0100,0000 the output frequency of P5.4 is SYSclk
//        CLK_DIV       =       0x80;           //1000,0000  the output frequency of P5.4 is SYSclk/2
//        CLK_DIV       =       0xC0;           //1100,0000  the output frequency of P5.4 is SYSclk/4

          while (1);
}
```

STC MCU Limited.

2. Assembler Listing

```
/*---------------------------------------------------------------------------------------------------*/
/* --- STC MCU  Limited. ---------------------------------------------------------------------------*/
/* --- Exam Program of Master clock output ---------------------------------------------------------*/
/* --- Mobile: (86)13922805190 ---------------------------------------------------------------------*/
/* --- Fax: 86-755-82905966 ------------------------------------------------------------------------*/
/* --- Tel: 86-755-82948412 ------------------------------------------------------------------------*/
/* --- Web: www.STCMCU.com -------------------------------------------------------------------------*/
/* If you want to use the program or the program referenced in the  ----------------------------*/
/* article, please specify in which data and procedures from STC    ----------------------------*/
/*---- In Keil C development environment, select the Intel 8052 to compiling ----------------*/
/*----  And only contain < reg51.h > as header file ------------------------------------------*/
/*---------------------------------------------------------------------------------------------------*/

//suppose the frequency of test chip is 18.432MHz

CLK_DIV         DATA    097H                    //Clock divider register

;-----------------------------------------
;interrupt vector table

        ORG     0000H
        LJMP    MAIN
;-----------------------------------------

        ORG     0100H
MAIN:
        MOV     SP,             #3FH            //initial SP
        MOV     CLK_DIV,        #40H            //0100,0000  the output frequency of P5.4 is SYSclk
//      MOV     CLK_DIV,        #80H            //1000,0000  the output frequency of P5.4 is SYSclk/2
//      MOV     CLK_DIV,        #C0H            //1100,0000  the output frequency of P5.4 is SYSclk/4
        SJMP    $

//-----------------------------------------
        END
```

STC MCU Limited.

7.7.3 Timer 0 Programmable Clock Output and Demo Program

How to output clock by using T0CLKO/P3.5.

The clock output of T0CLKO/P3.5 is controlled by the bit T0CLKO of register INT_CLKO (AUXR2).

AUXR2.0 - T0CLKO : 1, enable clock output
0, disable clock output

The ouput clock frequency of T0CLKO is controlled by Timer 0. When it is used as programmable clcok output, Timer 0 must work in **mode 0 (16-bit auto-reload timer/counter) or mode 2(8-bit auto-reload timer/counter) and** don't enable its interrupt to avoid CPU entering interrupt repeatly unless special circumstances.

INT_CLKO (AUXR2) (Address:8FH)

When T0CLKO/INT_CLKO.0=1, P3.5/T1 is configured for Timer0 programmable clock output T0CLKO.

The clock output frequency = T0 overflow/2

If Timer/Counter 0 in mode 0 (16 bit auto-reloadable mode),
and if C/$\overline{T}$ = 0, namely Timer/Counter 0 count on the internal system clock,
When T0 in 1T mode (AUXR.7/T0x12=1), the output frequency = (SYSclk)/(65536-[RL_TH0, RL_TL0])/2
When T0 in 12T mode (AUXR.7/T0x12=0), the output frequency = (SYSclk) /12/ (65536-[RL_TH0, RL_TL0])/2
and if C/$\overline{T}$ = 1, namely Timer/Counter 0 count on the external pulse input from P3.4/T0,
the output frequency = (T0_Pin_CLK) / (65536-[RL_TH0, RL_TL0])/2

RL_TH0 is the reloaded register of **TH0, RL_TL0** is the reload register of TL0.

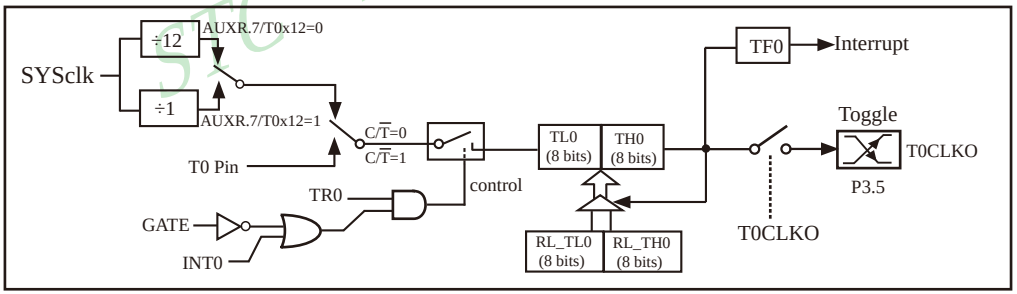

Timer/Counter 0 mode 0: 16 bit auto-reloadable mode

When T0CLKO/INT_CLKO.0=1, P3.5/T1 is configured for Timer 0 programmable clock output T0CLKO.

The clock output frequency = T0 overflow/2

If Timer/Counter 0 in mode 2 (8 bit auto-reloadable mode),
and if C/$\overline{T}$ = 0, namely Timer/Counter 0 count on the internal system clock,
When T0 in 1T mode(AUXR.7/T0x12=1), the output frequency = (SYSclk) / (256-TH0) / 2
When T0 in 12T mode(AUXR.7/T0x12=0), the output frequency = (SYSclk) / 12 / (256-TH0) / 2
and if C/$\overline{T}$ = 1, namely Timer/Counter 0 count on the external pulse input from P3.4/T0,
the output frequency = (T0_Pin_CLK) / (256-TH0) / 2

STC MCU Limited.

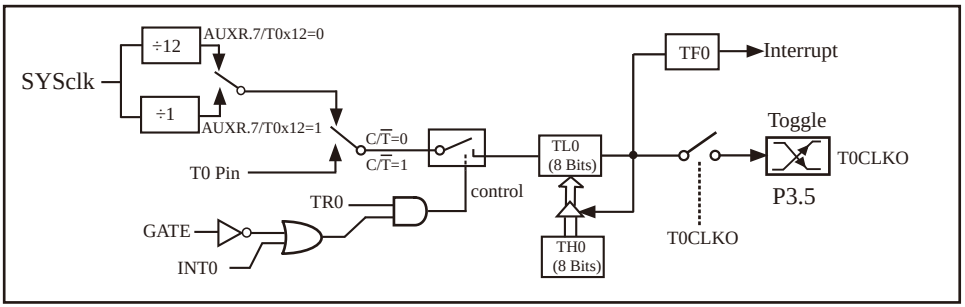

Timer/Counter 0 mode 2: 8 bit auto-reloadable mode

The following is the example program that Timer 0 output programmable clock by dividing the frequency of internal system clock or the clock input from external pin T0/P3.4 (C and assembly):

1. C Program Listing

```
/*-------------------------------------------------------------------------------------------------*/
/* --- STC MCU  Limited. ---------------------------------------------------------------------------*/
/* --- Exam Program of Timer 0 porgrammable clock output -------------------------------------------*/
/* --- Mobile: (86)13922805190 ---------------------------------------------------------------------*/
/* --- Fax: 86-755-82905966 ------------------------------------------------------------------------*/
/* --- Tel: 86-755-82948412 ------------------------------------------------------------------------*/
/* --- Web: www.STCMCU.com -------------------------------------------------------------------------*/
/* If you want to use the program or the program referenced in the  ----------------------------*/
/* article, please specify in which data and procedures from STC  ------------------------------*/
/*---- In Keil C development environment, select the Intel 8052 to compiling ------------------*/
/*----  And only contain < reg51.h > as header file ------------------------------------------------*/
/*-------------------------------------------------------------------------------------------------*/

//suppose the frequency of test chip is 18.432MHz

#include "reg51.h"

typedef unsigned char BYTE;
typedef unsigned int WORD;

#define FOSC 18432000L

//-----------------------------------------------
sfr     AUXR        =     0x8e;
sfr     INT_CLKO    =     0x8f;

sbit    T0CLKO      =     P3^5;

#define  F38_4KHz       (65536-FOSC/2/38400)                 //1T Mode
//#define  F38_4KHz       (65536-FOSC/2/12/38400)              //12T Mode
```

STC MCU Limited.

```
//-----------------------------------------------
void main()
{
        AUXR    |=      0x80;                   //Timer 0 in 1T mode
//      AUXR    &=      ~0x80;                  //Timer 0 in 12T mode

        TMOD    =       0x00;                   //set Timer0 in mode 0(16 bit auto-reloadable mode)

        TMOD    &=      ~0x04;                  //C/T0=0, count on internal system clock
//      TMOD    |=      0x04;                   //C/T0=1, count on external pulse input from T0 pin

        TL0     =       F38_4KHz;               //Initial timing value
        TH0     =       F38_4KHz >> 8;
        TR0     =       1;
        INT_CLKO        =       0x01;

        while (1);
}
```

STC MCU Limited.

2. Assembler Listing

```
/*-------------------------------------------------------------------------------------------------*/
/* --- STC MCU  Limited. ---------------------------------------------------------------------------*/
/* --- Exam Program of Timer 0 porgrammable clock output -------------------------------------------*/
/* --- Mobile: (86)13922805190 ---------------------------------------------------------------------*/
/* --- Fax: 86-755-82905966 ------------------------------------------------------------------------*/
/* --- Tel: 86-755-82948412 ------------------------------------------------------------------------*/
/* --- Web: www.STCMCU.com -------------------------------------------------------------------------*/
/* If you want to use the program or the program referenced in the  ----------------------------*/
/* article, please specify in which data and procedures from STC    ----------------------------*/
/*---- In Keil C development environment, select the Intel 8052 to compiling ------------------*/
/*----  And only contain < reg51.h > as header file ---------------------------------------------*/
/*-------------------------------------------------------------------------------------------------*/

//suppose the frequency of test chip is 18.432MHz

AUXR            DATA    08EH
INT_CLKO        DATA    08FH

T0CLKO          BIT     P3.5

F38_4KHz        EQU     0FF10H          //38.4KHz(1T mode, 65536-18432000/2/38400)
//F38_4KHz      EQU     0FFECH          //38.4KHz(12T mode,(65536-18432000/2/12/38400)
//-----------------------------------------------
```

```
        ORG     0000H
        LJMP    MAIN

//---------------------------------------
        ORG     0100H
MAIN:
        MOV     SP,     #3FH

        ORL     AUXR,   #80H                    //Timer 0 in 1T mode
//      ANL     AUXR,   #7FH                    //Timer 0 in 12T mode

        MOV     TMOD,   #00H                    //set Timer0 in mode 0(16 bit auto-reloadable mode)

        ANL     TMOD,   #0FBH                   //C/T0=0, count on internal system clock
//      ORL     TMOD,   #04H                    //C/T0=1, count on external pulse input from T0 pin

        MOV     TL0,    #LOW F38_4KHz           //Initial timing value
        MOV     TH0,    #HIGH F38_4KHz
        SETB    TR0
        MOV     INT_CLKO,       #01H

        SJMP    $

;---------------------------------------

        END
```

STC MCU Limited.

7.7.4 Timer 1 Programmable Clock Output and Demo Program

How to output clock by using T1CLKO/P3.4.

The clock output of T1CLKO/P3.4 is controlled by the bit T1CLKO of register INT_CLKO (AUXR2).

AUXR2.1 - T1CLKO : 1, enable clock output
0, disable clock output

The ouput clock frequency of T1CLKO is controlled by Timer 1. When it is used as programmable clcok output, Timer 1 must work in **mode 1 (16-bit auto-reload timer/counter) or mode 2(8-bit auto-reload timer/counter) and** don't enable its interrupt to avoid CPU entering interrupt repeatly unless special circumstances.

INT_CLKO (AUXR2) (Address:8FH)

When T1CLKO/INT_CLKO.1=1, P3.4/T0 is configured for Timer 1 programmable clock output T1CLKO.

The clock output frequency = T1 overflow/2

If Timer/Counter 1 in mode 1 (16 bit auto-reloadable mode),
and if C/$\overline{T}$ = 0, namely Timer/Counter 1 count on the internal system clock,
When T1 in 1T mode (AUXR.6/T1x12=1), the output frequency = (SYSclk)/(65536-[RL_TH1, RL_TL1])/2
When T1 in 12T mode (AUXR.6/T1x12=0), the output frequency = (SYSclk) /12/ (65536-[RL_TH1, RL_TL1])/2
and if C/$\overline{T}$ = 1, namely Timer/Counter 1 count on the external pulse input from P3.5/T1,
the output frequency = (T1_Pin_CLK) / (65536-[RL_TH1, RL_TL1])/2

RL_TH1 is the reloaded register of **TH1, RL_TL1** is the reload register of TL1.

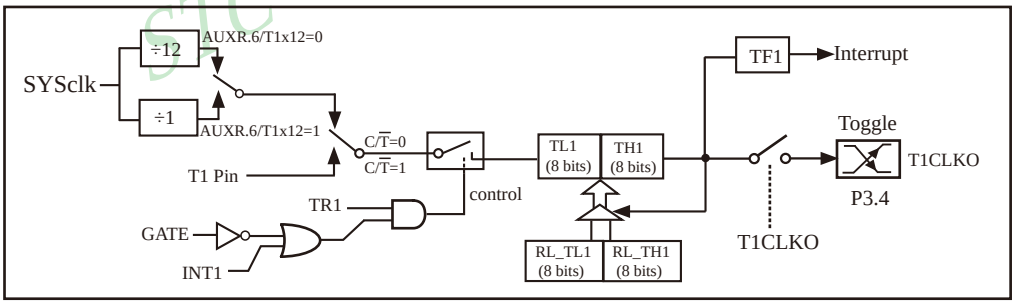

Timer/Counter 1 mode 0: 16 bit auto-reloadable mode

When T1CLKO/INT_CLKO.1=1, P3.4/T0 is configured for Timer 1 programmable clock output T1CLKO.

The clock output frequency = T1 overflow/2

If Timer/Counter 1 in mode 2 (8 bit auto-reloadable mode),
and if C/$\overline{T}$ = 0, namely Timer/Counter 1 count on the internal system clock,
When T1 in 1T mode(AUXR.6/T1x12=1), the output frequency = (SYSclk) / (256-TH1) / 2
When T1 in 12T mode(AUXR.6/T1x12=0), the output frequency = (SYSclk) / 12 / (256-TH1) / 2
and if C/$\overline{T}$ = 1, namely Timer/Counter 1 count on the external pulse input from P3.5/T1,
the output frequency = (T1_Pin_CLK) / (256-TH1) / 2

RL_TH1 is the reloaded register of **TH1, RL_TL1** is the reload register of TL1.

STC MCU Limited.

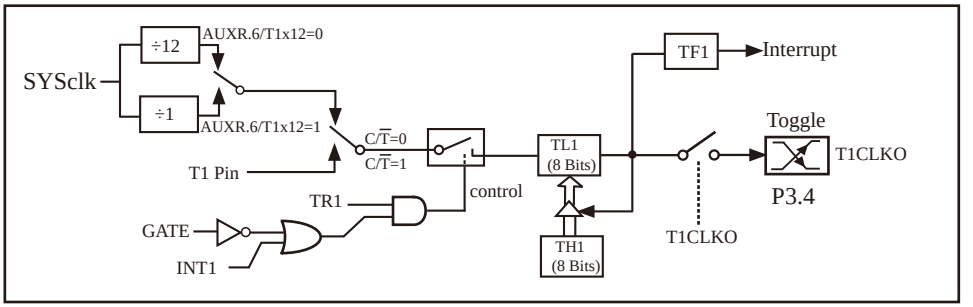

Timer/Counter 1 mode 2: 8 bit auto-reloadable mode

The following is the example program that Timer 1 output programmable clock by dividing the frequency of internal system clock or the clock input from external pin T1/P3.5 (C and assembly):

1. C Program Listing

```
/*-------------------------------------------------------------------------------------------------*/
/* --- STC MCU  Limited. ---------------------------------------------------------------------------*/
/* --- Exam Program of Timer 1 porgrammable clock output -------------------------------------------*/
/* --- Mobile: (86)13922805190 ---------------------------------------------------------------------*/
/* --- Fax: 86-755-82905966 ------------------------------------------------------------------------*/
/* --- Tel: 86-755-82948412 ------------------------------------------------------------------------*/
/* --- Web: www.STCMCU.com -------------------------------------------------------------------------*/
/* If you want to use the program or the program referenced in the  ----------------------------*/
/* article, please specify in which data and procedures from STC    ----------------------------*/
/*---- In Keil C development environment, select the Intel 8052 to compiling ----------------*/
/*----  And only contain < reg51.h > as header file ------------------------------------------*/
/*-------------------------------------------------------------------------------------------------*/

//suppose the frequency of test chip is 18.432MHz

#include "reg51.h"

typedef   unsigned char     BYTE;
typedef   unsigned int      WORD;

#define   FOSC    18432000L

//-----------------------------------------
sfr   AUXR        =       0x8e;
sfr   INT_CLKO    =       0x8f;

sbit  T1CLKO      =       P3^4;

#define   F38_4KHz        (65536-FOSC/2/38400)            //1T Mode
//#define F38_4KHz        (65536-FOSC/2/12/38400)         //12T Mode
```

STC MCU Limited.

```
//-----------------------------------------------
void main()
{
        AUXR    |=      0x40;                   //Timer 1 in 1T mode
//      AUXR    &=      ~0x40;                  //Timer 1 in 12T mode

        TMOD    =       0x00;                   //set Timer 1 in mode 0(16 bit auto-reloadable mode)

        TMOD    &=      ~0x40;                  //C/T1=0, count on internal system clock
//      TMOD    |=      0x40;                   //C/T1=1, count on external pulse input from T1 pin

        TL1     =       F38_4KHz;               //Initial timing value
        TH1     =       F38_4KHz >> 8;
        TR1     =       1;
        INT_CLKO        =       0x02;

        while (1);
}
```

STC MCU Limited.

2. Assembler Listing

```
/*-------------------------------------------------------------------------------------------------*/
/* --- STC MCU  Limited. ---------------------------------------------------------------------*/
/* --- Exam Program of Timer 1 porgrammable clock output -------------------------------------*/
/* --- Mobile: (86)13922805190 ----------------------------------------------------------------*/
/* --- Fax: 86-755-82905966 -------------------------------------------------------------------*/
/* --- Tel: 86-755-82948412 -------------------------------------------------------------------*/
/* --- Web: www.STCMCU.com --------------------------------------------------------------------*/
/* If you want to use the program or the program referenced in the  ----------------------------*/
/* article, please specify in which data and procedures from STC    ----------------------------*/
/*---- In Keil C development environment, select the Intel 8052 to compiling ------------------*/
/*----  And only contain < reg51.h > as header file ------------------------------------------------*/
/*-------------------------------------------------------------------------------------------------*/

//suppose the frequency of test chip is 18.432MHz

AUXR            DATA    08EH
INT_CLKO        DATA    08FH

T1CLKO          BIT     P3.4
F38_4KHz        EQU     0FF10H          //38.4KHz(1T mode, 65536-18432000/2/38400)
//F38_4KHz      EQU     0FFECH          //38.4KHz(12T mode, (65536-18432000/2/12/38400)
```

```
        ORG     0000H
        LJMP    MAIN

//-----------------------------------------------
        ORG     0100H
MAIN:
        MOV     SP,     #3FH

        ORL     AUXR,   #40H                    //Timer 1 in 1T mode
//      ANL     AUXR,   #0BFH                   //Timer 1 in 12T mode

        MOV     TMOD,   #00H                    //set Timer 1 in mode 0(16 bit auto-reloadable mode)

        ANL     TMOD,   #0BFH                   //C/T1=0,  count on internal system clock
//      ORL     TMOD,   #40H                    //C/T1=1, count on external pulse input from T1 pin

        MOV     TL1,    #LOW F38_4KHz           //Initial timing value
        MOV     TH1,    #HIGH F38_4KHz
        SETB    TR1
        MOV     INT_CLKO,       #02H

        SJMP    $

;-----------------------------------------------

        END
```

STC MCU Limited.

7.7.5 Timer 2 Programmable Clock Output and Demo Program

Internal Structure Diagram of Timer 2 is shown below:

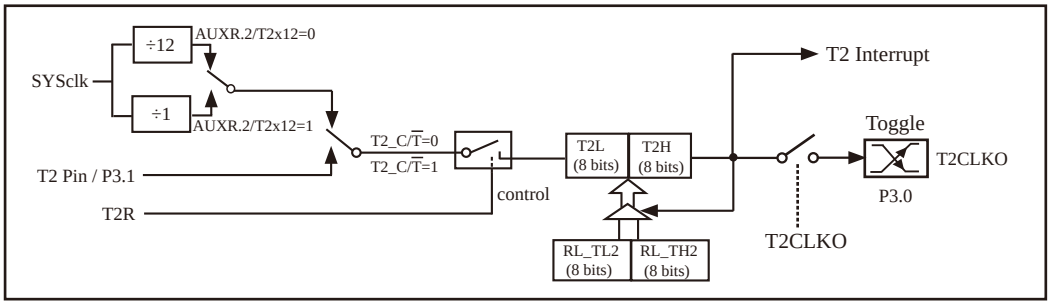

Timer / Counter 2 Operating Mode : 16 bit auto-reloadable Mode

How to output clock by using T2CLKO/P3.0.

The clock output of T2CLKO/P3.0 is controlled by the bit T2CLKO of register INT_CLKO (AUXR2).

AUXR2.2 - T2CLKO : 1, enable clock output
0, disable clock output

The ouput clock frequency of T2CLKO is controlled by Timer 2. When it is used as programmable clcok output, Timer 2 interrupt don't be enabled to avoid CPU entering interrupt repeatly unless special circumstances.

INT_CLKO (AUXR2) (Address:8FH)

When T2CLKO/INT_CLKO.2=1, P3.0 is configured for Timer 2 programmable clock output T2CLKO.

The clock output frequency = T2 overflow/2

If T2_ $C/\overline{T}$ = 0, namely Timer/Counter 2 count on the internal system clock,

When T2 in 1T mode (AUXR.2/T2x12=1), the output frequency = (SYSclk)/(65536-[RL_TH2, RL_TL2])/2

When T2 in 12T mode (AUXR.2/T2x12=0), the output frequency = (SYSclk) /12/ (65536-[RL_TH2, RL_TL2])/2

If T2_ $C/\overline{T}$ = 1, namely Timer/Counter 2 count on the external pulse input from P3.1/T2,

the output frequency = (T2_Pin_CLK) / (65536-[RL_TH2, RL_TL2])/2

RL_TH2 is the reloaded register of **T2H, RL_TL2** is the reload register of T2L.

STC MCU Limited.

The following is the example program that Timer 2 output programmable clock by dividing the frequency of internal system clock or the clock input from external pin T2/P3.1 (C and assembly):

1. C Program Listing

```
/*-------------------------------------------------------------------------------------------------*/
/* --- STC MCU  Limited. ---------------------------------------------------------------------------*/
/* --- Exam Program of Timer 2 porgrammable clock output -------------------------------------------*/
/* --- Mobile: (86)13922805190 ---------------------------------------------------------------------*/
/* --- Fax: 86-755-82905966 ------------------------------------------------------------------------*/
/* --- Tel: 86-755-82948412 ------------------------------------------------------------------------*/
/* --- Web: www.STCMCU.com -------------------------------------------------------------------------*/
/* If you want to use the program or the program referenced in the  ----------------------------*/
/* article, please specify in which data and procedures from STC    ----------------------------*/
/*---- In Keil C development environment, select the Intel 8052 to compiling ------------------*/
/*----  And only contain < reg51.h > as header file ---------------------------------------------*/
/*-------------------------------------------------------------------------------------------------*/

//suppose the frequency of test chip is 18.432MHz

#include "reg51.h"

typedef unsigned char   BYTE;
typedef unsigned int    WORD;

#define FOSC 18432000L

//-----------------------------------------

sfr     AUXR        = 0x8e;
sfr     INT_CLKO    = 0x8f;
sfr     T2H         = 0xD6;
sfr     T2L         = 0xD7;

sbit    T2CLKO      = P3^0;

#define   F38_4KHz      (65536-FOSC/2/38400)          //1T mode
//#define F38_4KHz      (65536-FOSC/2/12/38400)       //12T mode

//-----------------------------------------

void main()
{
        AUXR    |=    0x04;                           //Timer 2 in 1T mode
//      AUXR    &=    ~0x04;                          //Timer 2 in 12T mode
```

STC MCU Limited.

```
        AUXR    &=      ~0x08;          //T2_C/T=0, count on internal system clock
//      AUXR    |=      0x08;           //T2_C/T=1,  count on external pulse input from T2(P3.1) pin
        T2L     =       F38_4KHz;                       //Initial timing value
        T2H     =       F38_4KHz >> 8;

        AUXR    |=      0x10;
        INT_CLKO        =       0x04;

        while (1);
}
```

STC MCU Limited.

2. Assembler Listing

```
/*---------------------------------------------------------------------------------------------------*/
/* --- STC MCU  Limited. ---------------------------------------------------------------------------*/
/* --- Exam Program of Timer 2 porgrammable clock output -------------------------------------------*/
/* --- Mobile: (86)13922805190 ----------------------------------------------------------------------*/
/* --- Fax: 86-755-82905966 -------------------------------------------------------------------------*/
/* --- Tel: 86-755-82948412 -------------------------------------------------------------------------*/
/* --- Web: www.STCMCU.com --------------------------------------------------------------------------*/
/* If you want to use the program or the program referenced in the  -----------------------------*/
/* article, please specify in which data and procedures from STC    -----------------------------*/
/*---- In Keil C development environment, select the Intel 8052 to compiling ---------------------*/
/*----  And only contain < reg51.h > as header file ------------------------------------------------*/
/*---------------------------------------------------------------------------------------------------*/

//suppose the frequency of test chip is 18.432MHz


AUXR            DATA    08EH
INT_CLKO        DATA    08FH
T2H             DATA    0D6H
T2L             DATA    0D7H

T2CLKO          BIT     P3.0

F38_4KHz        EQU     0FF10H          //38.4KHz(1T mode, 65536-18432000/2/38400)
//F38_4KHz      EQU     0FFECH          //38.4KHz(12T mode, (65536-18432000/2/12/38400)

//-----------------------------------------------
```

```
        ORG     0000H
        LJMP    MAIN

//----------------------------------------

        ORG     0100H
MAIN:
        MOV     SP,     #3FH

        ORL     AUXR,   #04H                    //Timer 2 in 1T mode
//      ANL     AUXR,   #0FBH                   //Timer 2 in 12T mode

        ANL     AUXR,   #0F7H           //T2_C/T=0, count on internal system clock
//      ORL     AUXR,   #08H            //T2_C/T=1, count on external pulse input from T2(P3.1) pin

        MOV     T2L,    #LOW F38_4KHz           //Initial timing value
        MOV     T2H,    #HIGH F38_4KHz
        ORL     AUXR,   #10H
        MOV     INT_CLKO,   #04H

        SJMP    $

;----------------------------------------

        END
```

STC MCU Limited.

7.7.6 Timer 3 Programmable Clock Output and Demo Program

Internal Structure Diagram of Timer 3 is shown below:

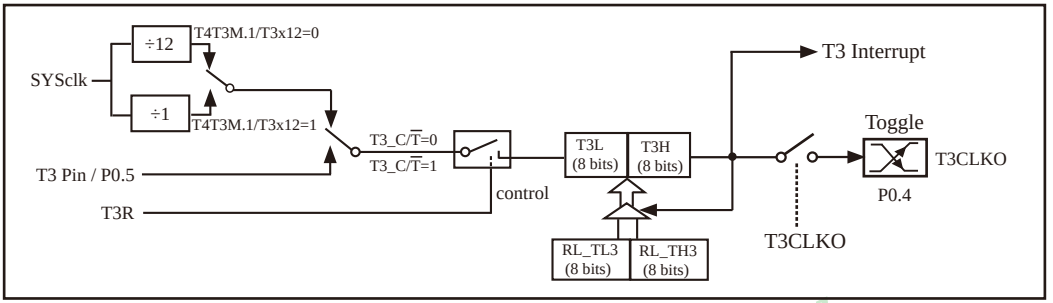

Timer / Counter 3 Operating Mode : 16 bit auto-reloadable Mode

How to output clock by using T3CLKO/P0.4.

The clock output of T3CLKO/P0.4 is controlled by the bit T3CLKO of register T4T3M.

T4T3M.0 - T3CLKO : 1, enable clock output
0, disable clock output

The ouput clock frequency of T3CLKO is controlled by Timer 3. When it is used as programmable clcok output, Timer 3 interrupt don't be enabled to avoid CPU entering interrupt repeatly unless special circumstances.

T4T3M(Address:D1H)

When T3CLKO/T4T3M.0=1, P0.4 is configured for Timer 3 programmable clock output T3CLKO.

The clock output frequency = T3 overflow/2

If T3_ C/$\overline{T}$ = 0, namely Timer/Counter 3 count on the internal system clock,

When T3 in 1T mode (T4T3.1/T3x12=1), the output frequency = (SYSclk)/(65536-[RL_TH3, RL_TL3])/2

When T3 in 12T mode (T4T3.1/T3x12=0), the output frequency = (SYSclk) /12/ (65536-[RL_TH3, RL_TL3])/2

If T3_C/$\overline{T}$ = 1, namely Timer/Counter 3 count on the external pulse input from P0.5/T3,

the output frequency = (T3_Pin_CLK) / (65536-[RL_TH3, RL_TL3])/2

RL_TH3 is the reloaded register of **T3H, RL_TL3** is the reload register of T3L.

STC MCU Limited.

7.7.7 Timer 4 Programmable Clock Output and Demo Program

Internal Structure Diagram of Timer 4 is shown below:

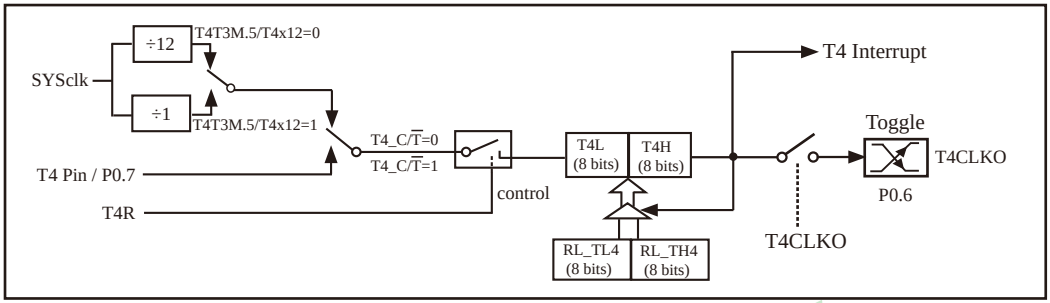

Timer / Counter 4 Operating Mode : 16 bit auto-reloadable Mode

How to output clock by using T4CLKO/P0.6.

The clock output of T4CLKO/P0.6 is controlled by the bit T4CLKO of register T4T3M.

T4T3M.4 - T4CLKO : 1, enable clock output
0, disable clock output

The ouput clock frequency of T4CLKO is controlled by Timer 4. When it is used as programmable clcok output, Timer 4 interrupt don't be enabled to avoid CPU entering interrupt repeatly unless special circumstances.

T4T3M(Address:D1H)

When T4CLKO/T4T3M.4=1, P0.6 is configured for Timer 4 programmable clock output T4CLKO.

The clock output frequency = T4 overflow/2

If T4_ C/$\overline{T}$ = 0, namely Timer/Counter 4 count on the internal system clock,

When T4 in 1T mode (T4T3.5/T4x12=1), the output frequency = (SYSclk)/(65536-[RL_TH4, RL_TL4])/2

When T4 in 12T mode (T4T3.5/T4x12=0), the output frequency = (SYSclk) /12/ (65536-[RL_TH4, RL_TL4])/2

If T4_C/$\overline{T}$ = 1, namely Timer/Counter 4 count on the external pulse input from P0.7/T4,

the output frequency = (T4_Pin_CLK) / (65536-[RL_TH4, RL_TL4])/2

RL_TH4 is the reloaded register of **T4H, RL_TL4** is the reload register of T4L.

STC MCU Limited.

7.8 Power-Down Wake-Up Special Timer and Demo Program

Power-down wake-up special Timer is added to parts of STC15 series MCU. Besides external interrupts, power-down wake-up timer also can wake up MCU from Stop/PD mode after MCU go into Stop/Power-Down (PD) mode.

The power consumption of power-down wake-up special Timer : 3uA (for 3V chip) and 5uA (for 5V chip).

Power-down wake-up special Timer is controlled and managed by registers WKTCH and WKTCL

WKTCL : Power-Down Wake-up Timer Control register low (Non bit-addressable)

SFR name	Address	bit	B7	B6	B5	B4	B3	B2	B1	B0	Reset Value
WKTCL	AAH	name									1111 11110B

WKTCH : Power-Down Wake-up Timer Control register high (Non bit-addressable)

SFR name	Address	bit	B7	B6	B5	B4	B3	B2	B1	B0	Reset Value
WKTCH	ABH	name	WKTEN								0111 1111B

Internal power-down wake-up special Timer consists of a 15-bit timer {WKTCH[6:0],WKTCL[7:0]}. The maximum count value of the 15-bit timer {WKTCH[6:0],WKTCL[7:0]} is 32768, while the minimum is 0.

WKTEN：The enable bit of internal power-down wake-up special Timer

WKTEN=1，enable internal power-down wake-up special Timer；

WKTEN=0，disable internal power-down wake-up special Timer.

There are two hidden registers WKTCL_CNT and WKTCH_CNT designed for internal power-down wake-up special Timer. The address of WKTCL_CNT is the same as WKTCL's, and WKTCH_CNT and WKTCH share in the same address. In fact, WKTCL_CNT and WKTCH_CNT are used as counter, while WKTCL and WKTCH are used as comparator. The writing on registers [WKTCH, WKTCL] only can be written into registers [WKTCH, WKTCL], but not into registers [WKTCH_CNT, WKTCL_CNT]. However, it is actually not to read the content of registers [WKTCH, WKTCL] but the registers [WKTCH_CNT, WKTCL_CNT] that reads the content of registers [WKTCH, WKTCL].

Special Function Registers WKTCL_CNT and WKTCH_CNT are shown below:

WKTCL_CNT

SFR name	Address	bit	B7	B6	B5	B4	B3	B2	B1	B0	Reset Value
WKTCL_CNT	AAH	name									1111 1111B

WKTCH_CNT

SFR name	Address	bit	B7	B6	B5	B4	B3	B2	B1	B0	Reset Value
WKTCH_CNT	ABH	name	-								x111 1111B

STC MCU Limited.

That can enable the internal power-down wake-up timer by setting the bit WKTEN(Power Down Wakeup Timer Enable) for 1. Once MCU go into Stop/Power-Down mode, the register [WKTCH_CNT,WKTCL_CNT] would be incremented from 7FFFH to the preload value of register{WKTCH[6:0],WKTCL[7:0]}. If the value of register [WKTCH_CNT,WKTCL_CNT] has been incremented to equal to the register{WKTCH[6:0],WKTCL[7:0]}, the system clock would start to oscillate. If the internal system clock is used as the master clock (selected by STC-ISP Writer/Programmer), MCU would be waked up from Stop/Power-Down mode after 64 clocks. If the external crystal or clock is used as the master clock (selected by STC-ISP Writer/Programmer), MCU would be waked up from Stop/Power-Down mode after 1024 clocks. The content of register **[WKTCH_CNT,WKTCL_CNT]** leaves unchanged after MCU is waked up from Stop/Power-Down mode. The waiting time of MCU in Stop/Power-Down mode can be reqiured by reading the register **[WKTCH,WKTCL] (actually read the register** [WKTCH_CNT,WKTCL_CNT]).

Note: The preload value of register {WKTCH[6:0], WKTCL[7:0]}equals to subtract 1 from the count value that users want to. For example, if users want to count 10 times, the preload value of register {WKTCH[6:0], WKTCL[7:0]} would be 9. And 7FFFH (that is 32767) would be written into the register {WKTCH[6:0], WKTCL[7:0]} if the count value is 32768.

Internal power-down wake-up Timer has its own internal clock whcih decide the time taken by counting a time. The clock frequency of internal power-down wake-up Timer is about 32768Hz. The frequency in normal temperature can be accessed by reading the content of F8 and F9 units in RAM area for STC15 series MCU (except STC15F101W series). For STC15F101W series, it can be obtained by reading the content of 78 and 79 units in RAM area. Take F8 and F9 units in RAM area for example to introduce the frequency of internal power-down wake-up Timer.

STC MCU Limited.

If **[WIRC_H,WIRC_L] represent the clock frequency of internal power-down wake-up Timer in normal** temperature accessed from **the uints F8 and F9 in RAM area, the counting time of internal power-down wake-up** Timer is calculated by following equation:

$$\text{Counting time of internal power-down wake-up Timer} = \frac{10^6\,\text{uS}}{[\text{WIRC_H, WIRC_L}]} \times 16 \times \text{times}$$

If the content of F8 unit is 80H and F9 is 00H, that is to say **[WIRC_H,WIRC_L] (the frequency of internal** power-down wake-up Timer) is 32768Hz, the counting time of internal power-down wake-up Timer would be :

488.28uS x 1	= 488.28uS，	when {WKTCH[6:0],WKTCL[7:0]} = 0
488.28uS x 10	= 4.8828mS，	when {WKTCH[6:0],WKTCL[7:0]} = 9
488.28uS x 100	= 48.828mS，	when {WKTCH[6:0],WKTCL[7:0]} = 99
488.28uS x 1000	= 488.28mS，	when {WKTCH[6:0],WKTCL[7:0]} = 999
488.28uS x 4096	= 2.0S，	when {WKTCH[6:0],WKTCL[7:0]} = 4095
488.28uS x 32768	=16S，	when {WKTCH[6:0],WKTCL[7:0]} = 32767

If the content of F8 unit is 79H and F9 is 18H, that is to say **[WIRC_H,WIRC_L] (the frequency of internal** power-down wake-up Timer) is 31000Hz, the counting time of internal power-down wake-up Timer would be :

516.13uS x 1	≈ 516.13uS，	when {WKTCH[6:0],WKTCL[7:0]} = 0
516.13uS x 10	≈ 5.1613mS，	when {WKTCH[6:0],WKTCL[7:0]} = 9
516.13uS x 100	≈ 51.613mS，	when {WKTCH[6:0],WKTCL[7:0]} = 99
516.13uS x 1000	≈ 516.13mS，	when {WKTCH[6:0],WKTCL[7:0]} = 999
516.13uS x 4096	≈ 2.1S，	when {WKTCH[6:0],WKTCL[7:0]} = 4095
516.13uS x 32768	≈16.9S，	when {WKTCH[6:0],WKTCL[7:0]} = 32767

If the content of F8 unit is 80H and F9 is E8H, that is to say **[WIRC_H,WIRC_L] (the frequency of internal** power-down wake-up Timer) is 31000Hz, the counting time of internal power-down wake-up Timer would be :

484. 85uS x 1	≈ 484. 85uS，	when {WKTCH[6:0],WKTCL[7:0]} = 0
484. 85uS x 10	≈ 4.8485mS，	when {WKTCH[6:0],WKTCL[7:0]} = 9
484. 85uS x 100	≈ 48.485mS，	when {WKTCH[6:0],WKTCL[7:0]} = 99
484. 85uS x 1000	≈ 484. 85mS，	when {WKTCH[6:0],WKTCL[7:0]} = 999
484. 85uS x 4096	≈ 1.986S，	when {WKTCH[6:0],WKTCL[7:0]} = 4095
484. 85uS x 32768	≈15.89S，	when {WKTCH[6:0],WKTCL[7:0]} = 32767

STC MCU Limited.

/*Demo program using internal power-down wake-up special Timer wake up Stop/Power-Down mode(C and ASM) */

1. C Program Listing

```
/*---------------------------------------------------------------------------------------------------------*/
/* --- STC MCU  Limited. ---------------------------------------------------------------------------------*/
/* --- Exam Program using power-down wake-up Timer to wake up Stop/Power-Down mode */
/* --- Mobile: (86)13922805190 ---------------------------------------------------------------------------*/
/* --- Fax: 86-755-82905966 ------------------------------------------------------------------------------*/
/* --- Tel: 86-755-82948412 ------------------------------------------------------------------------------*/
/* --- Web: www.STCMCU.com -------------------------------------------------------------------------------*/
/* If you want to use the program or the program referenced in the  ----------------------------------*/
/* article, please specify in which data and procedures from STC    ----------------------------------*/
/*---- In Keil C development environment, select the Intel 8052 to compiling ----------------------*/
/*----  And only contain < reg51.h > as header file ------------------------------------------------*/
/*---------------------------------------------------------------------------------------------------------*/

//suppose the frequency of test chip is 18.432MHz

#include "reg51.h"
#include "intrins.h"
```

```
//-----------------------------------------------

sfr     WKTCL  =        0xaa;
sfr     WKTCH =         0xab;

sbit    P10 = P1^0;

//-----------------------------------------------
void main()
{
        WKTCL = 49;                     //wake-up cycle: 488us*(49+1) = 24.4ms
        WKTCH = 0x80;

        while (1)
        {
                PCON = 0x02;            //Enter Stop/Power-Down Mode
                _nop_();
                _nop_();
                P10 = !P10;
        }
}
```

STC MCU Limited.

2. Assembler Listing

```
/*---------------------------------------------------------------------------------------------------*/
/* --- STC MCU  Limited. ---------------------------------------------------------------------------*/
/* --- Exam Program using power-down wake-up Timer wake up Stop/Power-Down mode -*/
/* --- Mobile: (86)13922805190 ---------------------------------------------------------------------*/
/* --- Fax: 86-755-82905966 ------------------------------------------------------------------------*/
/* --- Tel: 86-755-82948412 ------------------------------------------------------------------------*/
/* --- Web: www.STCMCU.com -------------------------------------------------------------------------*/
/* If you want to use the program or the program referenced in the  ----------------------------*/
/* article, please specify in which data and procedures from STC    ----------------------------*/
/*---- In Keil C development environment, select the Intel 8052 to compiling ----------------*/
/*----  And only contain < reg51.h > as header file ------------------------------------------*/
/*---------------------------------------------------------------------------------------------------*/

//suppose the frequency of test chip is 18.432MHz

WKTCL  DATA    0AAH
WKTCH DATA    0ABH
```

```
//---------------------------------------

        ORG     0000H
        LJMP    MAIN

//---------------------------------------

        ORG     0100H
MAIN:
        MOV     SP,     #3FH

        MOV     WKTCL, #49              //wake-up cycle: 488us*(49+1) = 24.4ms
        MOV     WKTCH,#80H
LOOP:
        MOV     PCON,   #02H            //Enter Stop/Power-Down Mode
        NOP
        NOP
        CPL     P1.0
        JMP     LOOP

        SJMP    $

;---------------------------------------

        END
```

STC MCU Limited.

7.9 Application Notes for Timer in practice

(1) Real-time Timer

Timer/Counter start running, When the Timer/Counter is overflow, the interrupt request generated, this action handle by the hardware automatically, however, the process which from propose interrupt request to respond interrupt request requires a certain amount of time, and that the delay interrupt request on-site with the environment varies, it normally takes three machine cycles of delay, which will bring real-time processing bias. In most occasions, this error can be ignored, but for some real-time processing applications, which require compensation.

Such as the interrupt response delay, for timer mode 0 and mode 1, there are two meanings: the first, because of the interrupt response time delay of real-time processing error; the second, if you require multiple consecutive timing, due to interruption response delay, resulting in the interrupt service program once again sets the count value is delayed by several count cycle.

If you choose to use Timer/Counter mode 1 to set the system clock, these reasons will produce real-time error for this situation, you should use dynamic compensation approach to reducing error in the system clock, compensation method can refer to the following example program.

```
…
CLR   EA              ;disable interrupt
MOV   A,    TLx       ;read TLx
ADD   A,    #LOW      ;LOW is low byte of compensation value
MOV   TLx,  A         ;update TLx
MOV   A,    THx       ;read THx
ADDC  A,    #HIGH     ;HIGH is high byte of compensation value
MOV   THx,  A         ;update THx
SETB  EA              ;enable interrupt
…
```

(2) Dynamic read counts

When dynamic read running timer count value, if you do not pay attention to could be wrong, this is because it is not possible at the same time read the value of the TLx and THx. For example the first reading TLx then THx, because the timer is running, after reading TLx, TLx carry on the THx produced, resulting in error; Similarly, after the first reading of THx then TLx, also have the same problems.

A kind of way avoid reading wrong is first reading THx then TLx and read THx once more, if the THx twice to read the same value, then the read value is correct, otherwise repeat the above process. Realization method reference to the following example code.

```
        …
RDTM:   MOV   A,    THx             ;save THx to ACC
        MOV   R0,   TLx             ;save TLx to R0
        CJNE  A,    THx,    RDTM    ;read THx again and compare with the previous value
        MOV   R1,   A               ;save THx to R1
        …
```

STC MCU Limited.

Chapter 8 Serial Port (UART) Communication

Except STC15F101W and STC15W10x series, all other STC15 series MCU have integrated one or more serial data commuication port, known as a UART (Universal Asychronous Receivers/Transmitter). For instance, there are four Universal Asychronous Receivers/Transmitters (UART1/UART2/UART3/UART4) in STC15W4K32S4 series. And there are two Universal Asychronous Receivers/Transmitters (UART1/UART2) in STC15F2K60S2 series. Besides, there are one Universal Asychronous Receiver/Transmitter (UART) in STC15F1K16S/STC-15W404S/STC15W401AS/STC15W201S/STC15F408AD series.

The number of UART of STC15 series MCU are summarized as shown in the following table.

Universal Asychronous Receivers/Transmitter (UART) / MCU Type	UART1	UART2	UART3	UART4
STC15W4K60S 4 series	√	√	√	√
STC15F2K60S2 series	√	√		
STC15W1K16S series	√			
STC15W404S series	√			
STC15W401AS series	√			
STC15F408AD series	√			
STC15W201S series	√			
STC15W10x series				
STC15F101W series				

STC MCU Limited.

√ means the corresponding series MCU have the corresponding UART.

STC15W4K32S4 series MCU have four Universal Asychronous Receivers/Transmitters ——UAT1/UART2/UART3/UART4. All the UARTs support full duplex, meaning they can transmit and receive simultaneously. They are also receive-buffered, meaning they can commence reception of a second byte before a previously received byte has been read from the reeeive register. (However, if the first byte still hasn't been read by the time reception of the second byte is complete, one of the bytes will be lost). UART1 uses register SBUF (address:99H) to hold both the received and transmitted data passing through pins RxD and TxD. Actually, there is two SBUF in the chip, one is for transmit and the other is for receive. Similarly, UART2 uses register S2BUF (address:9BH) to hold both the received and transmitted data passing through pins RxD2 and TxD2. UART3 uses register S3BUF (address:ADH) to hold both the received and transmitted data passing through pins RxD3 and TxD3. UART4 uses register S4BUF (address:85H) to hold both the received and transmitted data passing through pins RxD4 and TxD4. Actually, S2BUF and S3BUF and S4BUF all have two in the chip, one for transmit and the other for receive.

Serial communication for UART1 can take 4 different modes: Mode 0 provides synchronous communication while Modes 1, 2, and 3 provide asynchronous communication. The asynchronous communication operates as a full-duplex Universal Asynchronous Receiver and Transmitter (UART), which can transmit and receive simultaneously and at different baud rates. But there are only two different modes for UART2 and UART3 and UART4. The baud rate of the two modes are all variable.

Serial communiction involves the transimission of bits of data through only one communication line. The data are transimitted bit by bit in either synchronous or asynchronous format. Synchronous serial communication transmits ont whole block of characters in syschronization with a reference clock while asynchronous serial communication randomly transmits one character at any time, independent of any clock.

UART1 receive and transmitte data through pins RxD and TxD which can be switched in three different groups of pins by setting the bits S1_S1/AUXR1.7 and **S1_S0/P_SW1.6 in register AUXR1/P_SW1.** the RxD and TxD of UART1 can be switched from [RxD/P3.0,TxD/P3.1] to [RxD_2/P3.6,TxD_2/P3.7] or to [RxD_3/P1.6/XTAL2,TxD_3/P1.7/XTAL1].

UART2 receive and transmitte data through pins RxD2 and TxD2 which can be switched in two different groups of pins by setting the bit S2_S/P_SW2.0 **in register P_SW2.** the RxD2 and TxD2 of UART2 can be switched from [RxD2/P1.0,TxD2/P1.1] to [RxD2_2/P4.6,TxD2_2/P4.7].

UART3 receive and transmitte data through pins RxD3 and TxD3 which can be switched in two different groups of pins by setting the bit S3_S/P_SW2.1 **in register P_SW2.** the RxD3 and TxD3 of UART3 can be switched from [RxD3/P0.0,TxD3/P0.1] to [RxD3_2/P5.0,TxD3_2/P5.1].

UART4 receive and transmitte data through pins RxD4 and TxD4 which can be switched in two different groups of pins by setting the bit S4_S/P_SW2.2 **in register P_SW2.** the RxD4 and TxD4 of UART4 can be switched from [RxD4/P0.2,TxD4/P0.3] to [RxD4_2/P5.2,TxD4_2/P5.3].

STC MCU Limited

8.1 Special Function Registers about Serial Port 1 (UART1)

Symbol	Description	Address	Bit Address and Symbol MSB LSB								Value after Power-on or Reset
T2H	The high 8-bit of Timer 2 register	D6H									0000 0000B
T2L	The low 8-bit of Timer 2 register	D7H									0000 0000B
AUXR	Auxiliary register	8EH	T0x12	T1x12	UART_M0x6	T2R	T2_C/$\overline{T}$	T2x12	EXTRAM	S1ST2	0000 0001B
SCON	Serial Control	98H	SM0/FE	SM1	SM2	REN	TB8	RB8	TI	RI	0000 0000B
SBUF	Serial Buffer	99H									xxxx xxxxB
PCON	Power Control	87H	SMOD	SMOD0	LVDF	POF	GF1	GF0	PD	IDL	0011 0000B
IE	Interrupt Enable	A8H	EA	ELVD	EADC	ES	ET1	EX1	ET0	EX0	0000 0000B
IP	Interrupt Priority Low	B8H	PPCA	PLVD	PADC	PS	PT1	PX1	PT0	PX0	0000 0000B
SADEN	Slave Address Mask	B9H									0000 0000B
SADDR	Slave Address	A9H									0000 0000B
AUXR1 P_SW1	Auxiliary register 1	A2H	S1_S1	S1_S0	CCP_S1	CCP_S0	SPI_S1	SPI_S0	0	DPS	0100 0000B
CLK_DIV PCON2	Clock Division register	97H	MCKO_S1	MCKO_S1	ADRJ	Tx_Rx	MCLKO_2	CLKS2	CLKS1	CLKS0	0000 0000B

1. Serial Port 1 (UART1) Control Register: SCON and PCON

Serial port 1 of STC15 series has two control registers: Serial port control register (SCON) and PCON which used to select Baud-Rate

SCON: Serial port Control Register (Bit-Addressable)

SFR name	Address	bit	B7	B6	B5	B4	B3	B2	B1	B0
SCON	98H	name	SM0/FE	SM1	SM2	REN	TB8	RB8	TI	RI

FE : Framing Error bit. The SMOD0 bit must be set to enable access to the FE bit

0 : The FE bit is not cleared by valid frames but should be cleared by software.

1 : This bit set by the receiver when an invalid stop bit id detected.

SM0,SM1 : Serial Port Mode Bit 0/1.

SM0	SM1	Mode	Description	Baud Rate
0	0	Mode 0	synchronous shift serial mode: 8-bit shift register	If UART_M0x6 = 0, baud rate = SYSclk/12, If UART_M0x6 = 1, baud rate = SYSclk / 2
0	1	Mode 1	8-bit UART, baud-rate variable	If UART1 select Timer 2 or Timer 1 (as 16-bit auto-reload timer), baud rate= (T1 or T2 overflow)/4. If UART1 select Timer 1 (as 8-bit auto-reload timer), baud rate = (2^{SMOD}/32)×(T1 overflow)
1	0	Mode 2	9-bit UART	(2^{SMOD} / 64) x SYSclk SYSclk is system clock frequency
1	1	Mode 3	9-bit UART, baud-rate variable	If UART1 select Timer 2 or Timer 1 (as 16-bit auto-reload timer), baud rate= (T1 or T2 overflow)/4. If UART1 select Timer 1 (as 8-bit auto-reload timer), baud rate = (2^{SMOD}/32)×(T1 overflow)

If T1 in mode 0 (16-bit auto-reload timer/counter) and AUXR.6/T1x12 = 0 ,
T1 overflow = SYSclk/12/(65536 - [RL_TH1,RL_TL1]) ;
If T1 in mode 0 (16-bit auto-reload timer/counter) and AUXR.6/T1x12 = 1,
T1 overflow = SYSclk / (65536 - [RL_TH1,RL_TL1])
RL_TH1 is the reloaded register of TH1, and RL_TL1 is the reload register of TL1 in above formula.

If T1 in mode 2 (8-bit auto-reload timer/counter) and T1x12 = 0,
T1 overflow = SYSclk/12/(256 - TH1) ;
If T1 in mode 2 (8-bit auto-reload timer/counter) and T1x12 = 1,
T1 overflow = SYSclk / (256 - TH1)

If AUXR.2/T2x12 = 0, T2 overflow = SYSclk / 12/ (65536 - [RL_TH2,RL_TL2]) ;
If AUXR.2/T2x12 = 1, T2 overflow = SYSclk / (65536 - [RL_TH2,RL_TL2]) .
RL_TH2 is the reloaded register of T2H, and RL_TL2 is the reload register of T2L in above formula.

STC MCU Limited.

SM2 : Enable the automatic address recognition feature in mode 2 and 3. If SM2=1, RI will not be set unless the received 9th data bit is 1, indicating an address, and the received byte is a Given or Broadcast address. In mode1, if SM2=1 then RI will not be set unless a valid stop Bit was received, and the received byte is a Given or Broadcast address. In mode 0, SM2 should be 0.

REN : When set enables serial reception.

TB8 : The 9th data bit which will be transmitted in mode 2 and 3.

RB8 : In mode 2 and 3, the received 9th data bit will go into this bit.

TI : Transmit interrupt flag. Set by hardware when a byte of data has been transmitted by UART0 (after the 8th bit in 8-bit UART Mode, or at the beginning of the STOP bit in 9-bit UART Mode). When the UART0 interrupt is enabled, setting this bit causes the CPU to vector to the UART0 interrupt service routine. This bit must be cleared manually by software.

RI : Receive interrupt flag. Set to '1' by hardware when a byte of data has been received by UART0 (set at the STOP bit sam-pling time). When the UART0 interrupt is enabled, setting this bit to '1' causes the CPU to vector to the UART0 interrupt service routine. This bit must be cleared manually by software.

STC MCU Limited.

SMOD/PCON.7 in PCON register can be used to set whether the baud rates of mode 1, mode2 and mode 3 are doubled or not.

PCON: Power Control register (Non bit-addressable)

SFR name	Address	bit	B7	B6	B5	B4	B3	B2	B1	B0
PCON	87H	name	SMOD	SMOD0	LVDF	POF	GF1	GF0	PD	IDL

SMOD: double Baud rate control bit.

0 : Disable double Baud rate of the UART.

1 : Enable double Baud rate of the UART in mode 1,2,or 3.

SMOD0: Frame Error select.

0 : SCON.7 is SM0 function.

1 : SCON.7 is FE function. Note that FE will be set after a frame error regardless of the state of SMOD0.

2. SBUF: Serial port 1 Data Buffer register (Non bit-addressable)

SFR name	Address	bit	B7	B6	B5	B4	B3	B2	B1	B0
SBUF	99H	name								

It is used as the buffer register in transmission and reception.The serial port buffer register (SBUF) is really two 8-bit registers. Writing to SBUF loads data to be transmitted, and reading SBUF accesses received data. These are two separate and distinct registers, the transimit write-only register, and the receive read-only register.

3. AUXR: Auxiliary register (Address:8EH, Non bit-addressable)

SFR name	Address	bit	B7	B6	B5	B4	B3	B2	B1	B0
AUXR	8EH	name	T0x12	T1x12	UART_M0x6	T2R	T2_C/$\overline{T}$	T2x12	EXTRAM	S1ST2

B7 - T0x12 : Timer 0 clock source bit.
0 : The clock source of Timer 0 is SYSclk/12. It will compatible to the traditional 8051 MCU
1 : The clock source of Timer 0 is SYSclk/1. It will drive the T0 faster than a traditional 8051 MCU

B6 - T1x12 : Timer 1 clock source bit.
0 : The clock source of Timer 1 is SYSclk/12. It will compatible to the traditional 8051 MCU
1 : The clock source of Timer 1 is SYSclk/1. It will drive the T0 faster than a traditional 8051 MCU
If T1 is used as the baud-rate generator of UART1, T1x12 will decide whether UART1 is 1T or 12T.

B5 - UART_M0x6 : Baud rate select bit of UART1 while it is working under Mode-0
0 : The baud-rate of UART in mode 0 is SYSclk/12.
1 : The baud-rate of UART in mode 0 is SYSclk/2.

B4 - T2R: Timer 2 Run control bit
0 : not run Timer 2;
1 : run Timer 2.

B3 - T2_C/$\overline{T}$: Counter or timer 2 selector
0 : as Timer (namely count on internal system clock)
1 : as Counter (namely count on the external pulse input from T2/P3.1)

B2 - T2x12 : Timer 2 clock source bit.
0 : The clock source of Timer 2 is SYSclk/12.
1 : The clock source of Timer 2 is SYSclk/1.
If T2 is used as the baud-rate generator of UART1 or UART2, T1x12 will decide whether UART1 or UART2 is 1T or 12T.

B1 - EXTRAM : Internal / external RAM access control bit.
0 : On-chip auxiliary RAM is enabled.
1 : On-chip auxiliary RAM is always disabled.

B0 - S1ST2 : the control bit that UART1 select Timer 2 as its baud-rate generator.
0 : Select Timer 1 as the baud-rate generator of UART1
1 : Select Timer 2 as the baud-rate generator of UART1. Timer 1 is released to use in other functions.

Seial port 1(UART1) can select Timer 1, also can select Timer 2 as its baud-rate generator. When S1ST2/AUXR.0 is set, Seial port 1(UART1) will select Timer 2 as its baud-rate generator, and Timer 1 can be released for other functions such as timer, counter and programmable clock output.

UART2 only can choose Timer 2 as its its baud-rate generator. UART1 prefer to select Timer 2 as its baud-rate generator, also can choose Timer 1 set by software. UART3 and UART4 defaut to selecting Timer 2 as their baud-rate generator. UART3 also can choose Timer 3 and UART4 can choose Timer 4 as their baud-rate generator.

STC MCU Limited.

4. Slave Address Control registers SADEN and SADDR

SADEN: Slave Address Mask register
SADDR: Slave Address register
SADDR register is combined with SADEN register to form Given/Broadcast Address for automatic address recognition. In fact, SADEN function as the "mask" register for SADDR register. The following is the example for it.

```
SADDR   =   1100 0000
SADEN   =   1111 1101
Given   =   1100  00x0  ──────►  The Given slave address will be checked except bit 1 is
                                 treated as "don't care".
```

The Broadcast Address for each slave is created by taking the logical OR of SADDR and SADEN. Zero in this result is considered as "don't care" and a Broad cast Address of all " don't care". This disables the automatic address detection feature.

STC MCU Limited.

6. Register bits related to UART1 interrupt: ES and PS

IE: Interrupt Enable Rsgister (Bit-addressable)

SFR name	Address	bit	B7	B6	B5	B4	B3	B2	B1	B0
IE	A8H	name	EA	ELVD	EADC	ES	ET1	EX1	ET0	EX0

EA : disables all interrupts.
If EA = 0,no interrupt will be acknowledged.
If EA = 1, each interrupt source is individually enabled or disabled by setting or clearing its enable bit.

ES : Serial port 1(UART1) interrupt enable bit.
If ES = 0, Serial port 1(UART1) interrupt would be diabled.
If ES = 1, Serial port 1(UART1) interrupt would be enabled.

IP: Interrupt Priority Register (Bit-addressable)

SFR name	Address	bit	B7	B6	B5	B4	B3	B2	B1	B0
IP	B8H	name	PPCA	PLVD	PADC	PS	PT1	PX1	PT0	PX0

PS : Serial Port 1 (UART1) interrupt priority control bit.
if PS = 0, Serial Port 1 (UART1) interrupt is assigned lowest priority (priority 0).
if PS = 1, Serial Port 1 (UART1) interrupt is assigned highest priority (priority 1).

7. UART1 Switch Register : AUXR1 (P_SW1)

AUXR1 (P_SW1): Auxiliary register 1 (Non bit-addressable)

Mnemonic	Add	Name	7	6	5	4	3	2	1	0	Reset Value
AUXR1 P_SW1	A2H	Auxiliary register 1	S1_S1	S1_S0	CCP_S1	CCP_S0	SPI_S1	SPI_S0	0	DPS	0100,0000

UART1/S1 can be switched in 3 groups of pins by selecting the control bits S1_S0 and S1_S1.		
S1_S1	S1_S0	UART1/S1 can be switched between P1 and P3
0	0	UART1/S1 on [P3.0/RxD,P3.1/TxD]
0	1	UART1/S1 on [P3.6/RxD_2,P3.7/TxD_2]
1	0	UART1/S1 on [P1.6/RxD_3/XTAL2,P1.7/TxD_3/XTAL1] when UART1 is on P1, please using internal R/C clock.
1	1	Invalid

Recommed UART1 on [P3.6/RxD_2,P3.7/TxD_2] or [P1.6/RxD_3/XTAL2,P1.7/TxD_3/XTAL1].

CCP can be switched in 3 groups of pins by selecting the control bits CCP_S1 and CCP_S0.		
CCP_S1	CCP_S0	CCP can be switched in P1 and P2 and P3
0	0	CCP on [P1.2/ECI,P1.1/CCP0,P1.0/CCP1,P3.7/CCP2]
0	1	CCP on [P3.4/ECI_2,P3.5/CCP0_2,P3.6/CCP1_2,P3.7/CCP2_2]
1	0	CCP on [P2.4/ECI_3,P2.5/CCP0_3,P2.6/CCP1_3,P2.7/CCP2_3]
1	1	Invalid

SPI can be switched in 3 groups of pins by selecting the control bits SPI_S1 and SPI_S0		
SPI_S1	SPI_S0	SPI can be switched in P1 and P2 and P4
0	0	SPI on [P1.2/SS,P1.3/MOSI,P1.4/MISO,P1.5/SCLK]
0	1	SPI on [P2.4/SS_2,P2.3/MOSI_2,P2.2/MISO_2,P2.1/SCLK_2]
1	0	SPI on [P5.4/SS_3,P4.0/MOSI_3,P4.1/MISO_3,P4.3/SCLK_3]
1	1	Invalid

DPS : DPTR registers select bit.

0 : DPTR0 is selected

1 : DPTR1 is selected

8. Set bit of UART1 Relay and Broadcast mode : Tx_Rx / CLK_DIV.4

Mnemonic	Add	Name	7	6	5	4	3	2	1	0	Reset Value
CLK_DIV (PCON2)	97H	Clock Division register	MCKO_S1	MCKO_S0	ADRJ	Tx_Rx	MCLKO_2	CLKS2	CLKS1	CLKS0	0000,x000

Tx_Rx：the set bit of relay and broadcast mode of UART1

0：UART1 works on normal mode

1：UART1 works on relay and broadcast mode，that to say output the input level state of RxD port to the outside TxD pin in real time, namely the external output of TxD pin can reflect the input level state of RxD port.

the RxD and TxD of UART1 can be switched in 3 groups of pins: [RxD/P3.0, TxD/P3.1];
[RxD_2/P3.6, TxD_2/P3.7];
[RxD_3/P1.6, TxD_3/P1.7].

8.2 UART1 Operation Modes

The serial port 1 (UART1) can be operated in 4 different modes which are configured by setting SM0 and SM1 in SFR SCON. Mode 1, Mode 2 and Mode 3 are asynchronous communication. In Mode 0, UART1 is used as a simple shift register.

8.2.1 Mode 0 : 8-Bit Shift Register

Mode 0, selected by writing 0s into bits SM1 and SM0 of SCON, puts the serial port into 8-bit shift register mode. Serial data enters and exits through RxD. TxD outputs the shift clock. Eight data bits are transmitted/received with the least-significant (LSB) first. The baud rate is fixed at 1/12 the System clock cycle in the default state. If AUXR.5 (UART_M0x6) is set, the baud rate is 1/2 System clock cycle.

Transmission is initiated by any instruction that uses SBUF as a destination register. The “write to SBUF” signal also loads a “1” into the 9th position of the transmit shift register and tells the TX Control block to commence a transmission. The internal timing is such that one full system clock cycle will elapse between "write to SBUF," and activation of SEND.

SEND transfers the output of the shift register to the alternate output function line of P3.0, and also transfers Shift Clock to the alternate output function line of P3.1. At the falling edge of the Shift Clock, the contents of the shift register are shifted one position to the right.

As data bits shift out to the right, “0” come in from the left. When the MSB of the data byte is at the output position of the shift register, then the “1” that was initially loaded into the 9th position is just to the left of the MSB, and all positions to the left of that contains zeroes. This condition flags the TX Control block to do one last shift and then deactivate SEND and set TI. Both of these actions occur after "write to SBUF".

Reception is initiated by the condition REN=1 and RI=0. After that, the RX Control unit writes the bits 11111110 to the receive shift register, and in the next clock phase activates RECEIVE. RECEIVE enables SHIFT CLOCK to the alternate output function line of P3.1.At RECEIVE is active, the contents of the receive shift register are shifted to the left one position. The value that comes in from the right is the value that was sampled at the P3.0 pin the rising edge of Shift clock.

As data bits come in from the right, “1”s shift out to the left. When the “0” that was initially loaded into the right-most position arrives at the left-most position in the shift register, it flags the RX Control block to do one last shift and load SBUF. Then RECEIVE is cleared and RI is set.

STC MCU Limited.

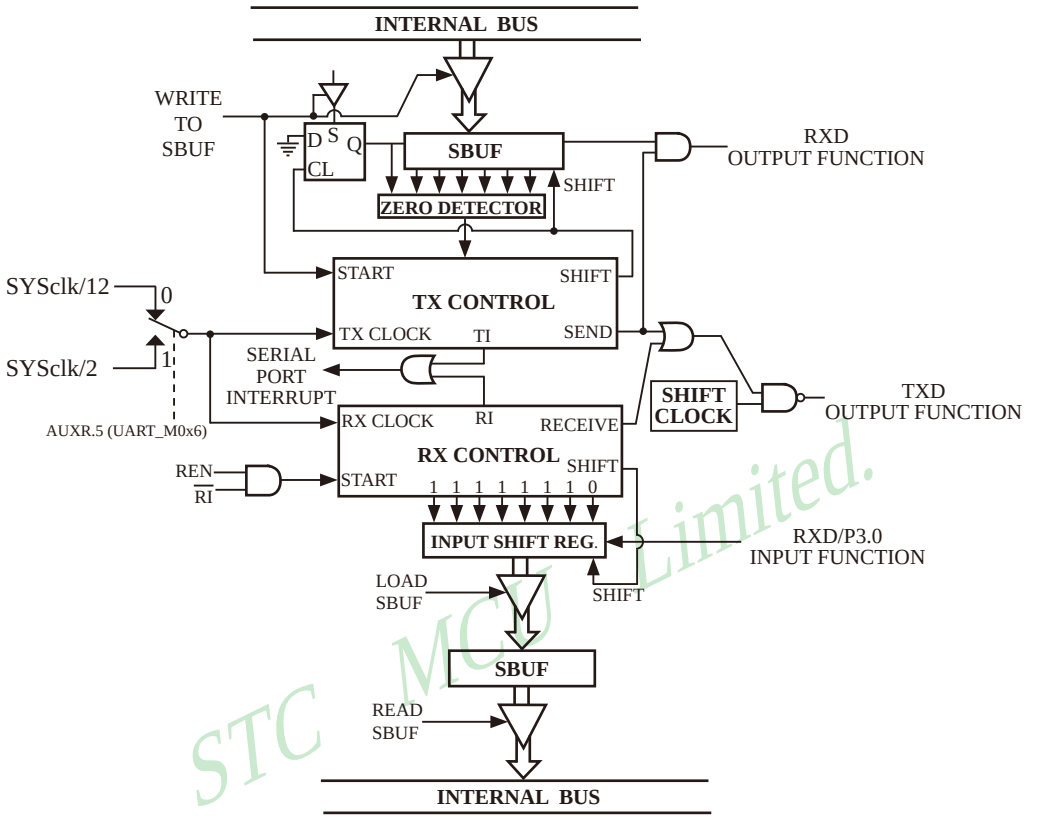

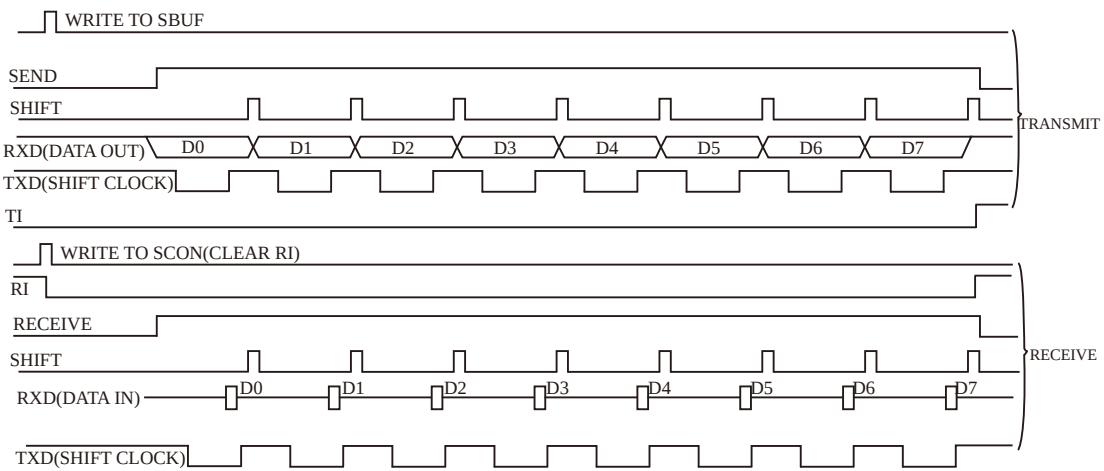

Serial Port Mode 0

STC MCU Limited.

8.2.2 Mode 1: 8-Bit UART with Variable Baud Rate

10 bits are transmitted through TxD or received through RxD. The frame data includes a start bit (0), 8 data bits and a stop bit (1). One receive, the stop bit goes into RB8 in SFR – SCON.

Transmission is initiated by any instruction that uses SBUF as a destination register. The “write to SBUF” signal also loads a “1” into the 9th bit position of the transmit shift register and flags the TX Control unit that a transmission is requested. Transmission actually happens at the next rollover of divided-by-16 counter. Thus the bit times are synchronized to the divided-by-16 counter, not to the “write to SBUF” signal.

The transmission begins with activation of $\overline{\text{SEND}}$, which puts the start bit at TxD. One bit time later, DATA is activated, which enables the output bit of the transmit shift register to TxD. The first shift pulse occurs one bit time after that.

As data bits shift out to the right, zeroes are clocked in from the left. When the MSB of the data byte is at the output position of the shift register, then the 1 that was initially loaded into the 9th position is just to the left of the MSB, and all positions to the left of that contain zeroes. This condition flags the TX Control unit to do one last shift and then deactivate $\overline{\text{SEND}}$ and set TI. This occurs at the 10th divide-by-16 rollover after “write to SBUF.”

Reception is initiated by a 1-to-0 transition detected at RxD. For this purpose, RxD is sampled at a rate of 16 times the established baud rate. When a transition is detected, the divided-by-16 counter is immediately reset, and 1FFH is written into the input shift register. Resetting the divided-by-16 counter aligns its roll-overs with the boundaries of the incoming bit times.

The 16 states of the counter divide each bit time into 16ths. At the 7th, 8th and 9th counter states of each bit time, the bit detector samples the value of RxD. The value accepted is the value that was seen in at least 2 of the 3 samples. This is done to reject noise. In order to reject false bits, if the value accepted during the first bit time is not a 0, the receive circuits are reset and the unit continues looking for another 1-to-0 transition. This is to provide rejection of false start bits. If the start bit is valid, it is shifted into the input shift register, and reception of the rest of the frame proceeds.

As data bits come in from the right, “1”s shift out to the left. When the start bit arrives at the left most position in the shift register,(which is a 9-bit register in Mode 1), it flags the RX Control block to do one last shift, load SBUF and RB8, and set RI. The signal to load SBUF and RB8 and to set RI is generated if, and only if, the following conditions are met at the time the final shift pulse is generated.

1) RI=0 and
2) Either SM2=0, or the received stop bit = 1

If either of these two conditions is not met, the received frame is irretrievably lost. If both conditions are met, the stop bit goes into RB8, the 8 data bits go into SBUF, and RI is activated. At this time, whether or not the above conditions are met, the unit continues looking for a 1-to-0 transition in RxD.

STC MCU Limited.

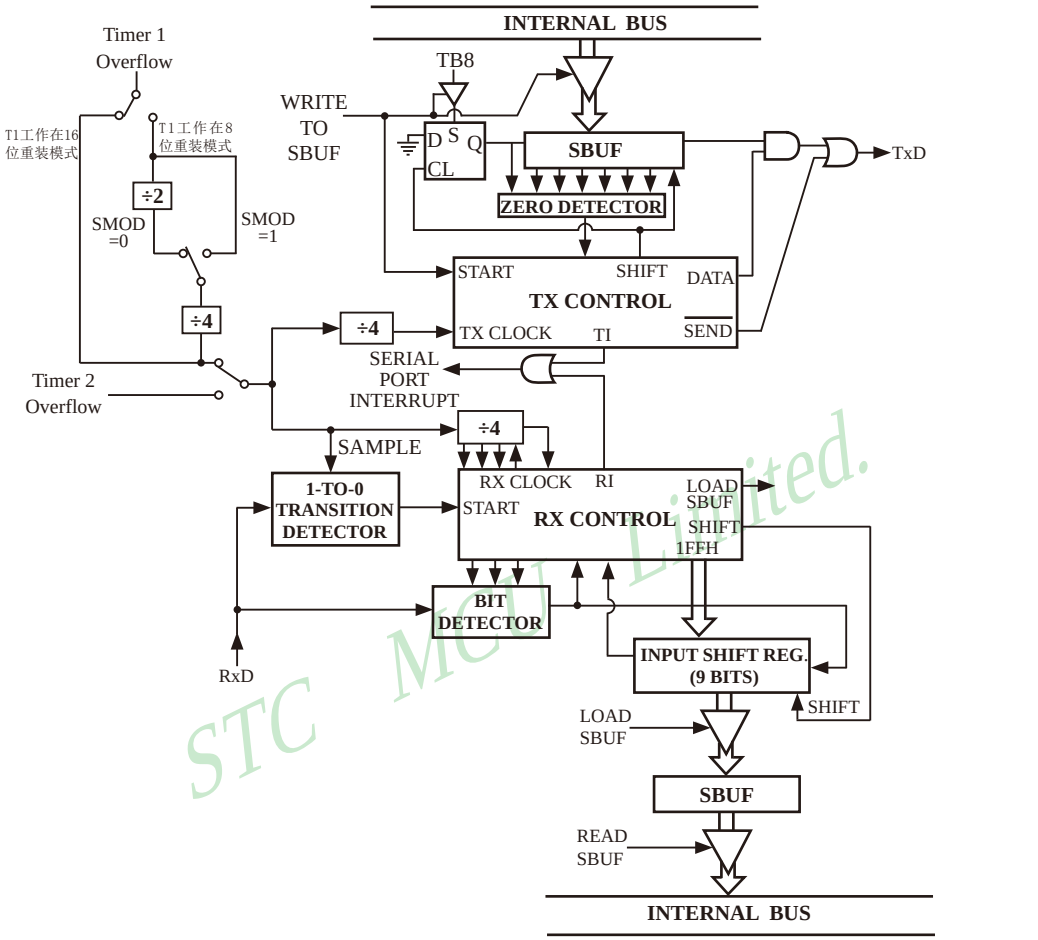

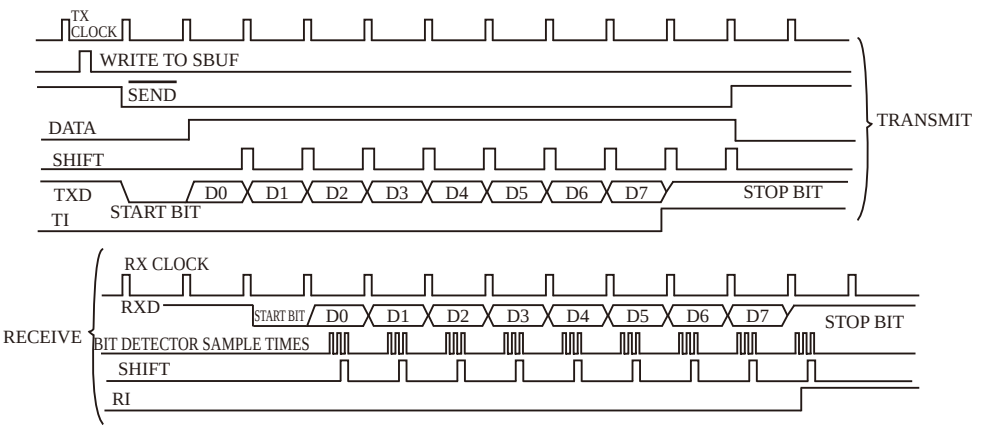

Serial Port Mode 1

STC MCU Limited.

When UART1 work in mode 1, its baud rate is variable. UART1 prefer to select Timer 2 as its baud-rate generator, also can choose Timer 1 set by software. So, its baud rate is determined by the T2 or T1 overflow rate.

The Calculating Formula of buad-rate when UART1 select T2 as its baud-rate generator is shown below :

Baud-Rate of UART1 = (T2 overflow)/4. Note: the bau-rate is independent of SMOD bit.

If T2 works in 1T mode (AUXR.2/T2x12=1), the T2 overflow = SYSclk / (65536 - [RL_TH2, RL_TL2]) ;
So, Baud-Rate of UART1 = SYSclk / (65536 - [[RL_TH2, RL_TL2]) / 4

If T2 works in 12T mode (AUXR.2/T2x12=0), the T2 overflow = SYSclk / 12 / (65536 - [RL_TH2, RL_TL2]) ;
So, Baud-Rate of UART1 = SYSclk / 12 / (65536 - [[RL_TH2, RL_TL2]) / 4

RL_TH2 is the reloaded register of T2H, and RL_TL2 is the reload register of T2L in above formula.

When UART1 select T1 as its baud-rate generator and T1 is working in mode 0 (16-bit auto-reload timer/counter), The calculating formula of buad-rate is shown below :

Baud-Rate of UART1 = (T1 overflow)/4. Note: the bau-rate is independent of SMOD bit.

If T1 works in 1T mode (AUXR.6/T1x12=1), the T1 overflow = SYSclk / (65536 - [RL_TH1, RL_TL1]) ;
So, Baud-Rate of UART1 = SYSclk / (65536 - [[RL_TH1, RL_TL1]) / 4

If T1 works in 12T mode (AUXR.6/T1x12=0), the T1 overflow = SYSclk / 12 / (65536 - [RL_TH1, RL_TL1]) ;
So, Baud-Rate of UART1 = SYSclk / 12 / (65536 - [[RL_TH1, RL_TL1]) / 4

RL_TH1 is the reloaded register of TH1, and RL_TL1 is the reload register of TL1 in above formula.

When UART1 select T1 as its baud-rate generator and T1 is working in mode 3 (8-bit auto-reload timer/counter), The calculating formula of buad-rate is shown below :

Baud-Rate of UART1 = (2^{SMOD}/32) × (T1 overflow).

If T1 works in 1T mode (AUXR.6/T1x12=1), the T1 overflow = SYSclk / (256 - TH1) ;
So, Baud-Rate of UART1 = (2^{SMOD}/32)×SYSclk / (256 - TH1)

If T1 works in 12T mode (AUXR.6/T1x12=0), the T1 overflow = SYSclk / 12 / (256 - TH1) ;
So, Baud-Rate of UART1 = (2^{SMOD}/32)×SYSclk / 12 / (256 - TH1)

STC MCU Limited.

8.2.3 Mode 2: 9-Bit UART with Fixed Baud Rate

11 bits are transmitted through TxD or received through RxD. The frame data includes a start bit(0), 8 data bits, a programmable 9th data bit and a stop bit(1). On transmit, the 9th data bit comes from TB8 in SCON. On receive, the 9th data bit goes into RB8 in SCON. The baud rate is programmable to either 1/32 or 1/64 the System clock cycle.

Baud rate in mode 2 = $(2^{SMOD}/64) \times SYSclk$

Transmission is initiated by any instruction that uses SBUF as a destination register. The "write to SBUF" signal also loads TB8 into the 9th bit position of the transmit shift register and flags the TX Control unit that a transmission is requested. Transmission actually happens at the next rollover of divided-by-16 counter. Thus the bit times are synchronized to the divided-by-16 counter, not to the "write to SBUF" signal.

The transmission begins when /SEND is activated, which puts the start bit at TxD. One bit time later, DATA is activated, which enables the output bit of the transmit shift register to TxD. The first shift pulse occurs one bit time after that. The first shift clocks a "1"(the stop bit) into the 9th bit position of the shift register. Thereafter, only "0"s are clocked in. As data bits shift out to the right, "0"s are clocked in from the left. When TB8 of the data byte is at the output position of the shift register, then the stop bit is just to the left of TB8, and all positions to the left of that contains "0"s. This condition flags the TX Control unit to do one last shift, then deactivate /SEND and set TI. This occurs at the 11th divided-by-16 rollover after "write to SBUF".

Reception is initiated by a 1-to-0 transition detected at RxD. For this purpose, RxD is sampled at a rate of 16 times whatever baud rate has been established. When a transition is detected, the divided-by-16 counter is immediately reset, and 1FFH is written into the input shift register.

At the 7th, 8th and 9th counter states of each bit time, the bit detector samples the value of RxD. The value accepted is the value that was seen in at least 2 of the 3 samples. This is done to reject noise. In order to reject false bits, if the value accepted during the first bit time is not a 0, the receive circuits are reset and the unit continues looking for another 1-to-0 transition. If the start bit is valid, it is shifted into the input shift register, and reception of the rest of the frame proceeds.

As data bits come in from the right, "1"s shift out to the left. When the start bit arrives at the leftmost position in the shift register,(which is a 9-bit register in Mode-2 and 3), it flags the RX Control block to do one last shift, load SBUF and RB8, and set RI. The signal to load SBUF and RB8 and to set RI is generated if, and only if, the following conditions are met at the time the final shift pulse is generated.:

1) RI=0 and
2) Either SM2=0, or the received 9th data bit = 1

If either of these two conditions is not met, the received frame is irretrievably lost. If both conditions are met, the stop bit goes into RB8, the first 8 data bits go into SBUF, and RI is activated. At this time, whether or not the above conditions are met, the unit continues looking for a 1-to-0 transition at the RxD input.

Note that the value of received stop bit is irrelevant to SBUF, RB8 or RI.

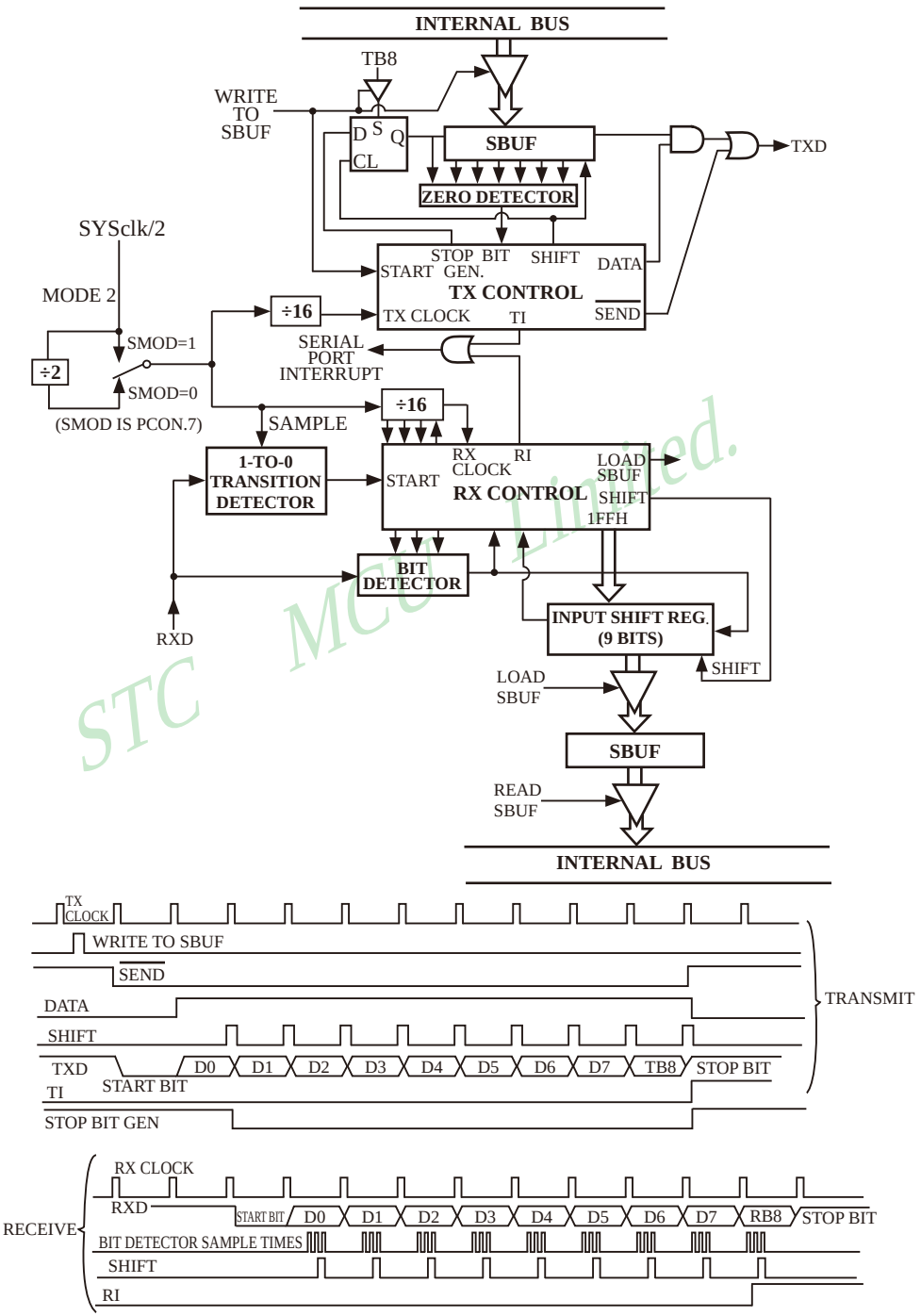

Serial Port Mode 2

STC MCU Limited.

8.2.4 Mode 3: 9-Bit UART with Variable Baud Rate

Mode 3 is the same as mode 2 except the baud rate is variable.

When UART1 work in mode 3, it prefer to select Timer 2 as its baud-rate generator, also can choose Timer 1 set by software. So, its baud rate is determined by the T2 or T1 overflow rate.

The Calculating Formula of buad-rate when UART1 select T2 as its baud-rate generator is shown below :

Baud-Rate of UART1 = (T2 overflow)/4. Note: the bau-rate is independent of SMOD bit.

If T2 works in 1T mode (AUXR.2/T2x12=1), the T2 overflow = SYSclk / (65536 - [RL_TH2, RL_TL2]) ;
So, Baud-Rate of UART1 = SYSclk / (65536 - [[RL_TH2, RL_TL2]) / 4

If T2 works in 12T mode (AUXR.2/T2x12=0), the T2 overflow = SYSclk / 12 / (65536 - [RL_TH2, RL_TL2]) ;
So, Baud-Rate of UART1 = SYSclk / 12 / (65536 - [[RL_TH2, RL_TL2]) / 4

RL_TH2 is the reloaded register of T2H, and RL_TL2 is the reload register of T2L in above formula.

When UART1 select T1 as its baud-rate generator and T1 is working in mode 0 (16-bit auto-reload timer/counter), The calculating formula of buad-rate is shown below :

Baud-Rate of UART1 = (T1 overflow)/4. Note: the bau-rate is independent of SMOD bit.

If T1 works in 1T mode (AUXR.6/T1x12=1), the T1 overflow = SYSclk / (65536 - [RL_TH1, RL_TL1]) ;
So, Baud-Rate of UART1 = SYSclk / (65536 - [[RL_TH1, RL_TL1]) / 4

If T1 works in 12T mode (AUXR.6/T1x12=0), the T1 overflow = SYSclk / 12 / (65536 - [RL_TH1, RL_TL1]) ;
So, Baud-Rate of UART1 = SYSclk / 12 / (65536 - [[RL_TH1, RL_TL1]) / 4

RL_TH1 is the reloaded register of TH1, and RL_TL1 is the reload register of TL1 in above formula.

When UART1 select T1 as its baud-rate generator and T1 is working in mode 3 (8-bit auto-reload timer/counter), The calculating formula of buad-rate is shown below :

Baud-Rate of UART1 = (2^{SMOD}/32) × (T1 overflow).

If T1 works in 1T mode (AUXR.6/T1x12=1), the T1 overflow = SYSclk / (256 - TH1) ;
So, Baud-Rate of UART1 = (2^{SMOD}/32)×SYSclk / (256 - TH1)

If T1 works in 12T mode (AUXR.6/T1x12=0), the T1 overflow = SYSclk / 12 / (256 - TH1) ;
So, Baud-Rate of UART1 = (2^{SMOD}/32)×SYSclk / 12 / (256 - TH1)

In all four modes, transmission is initiated by any instruction that use SBUF as a destination register. Reception is initiated in mode 0 by the condition RI = 0 and REN = 1. Reception is initiated in the other modes by the incoming start bit with 1-to-0 transition if REN=1.

STC MCU Limited

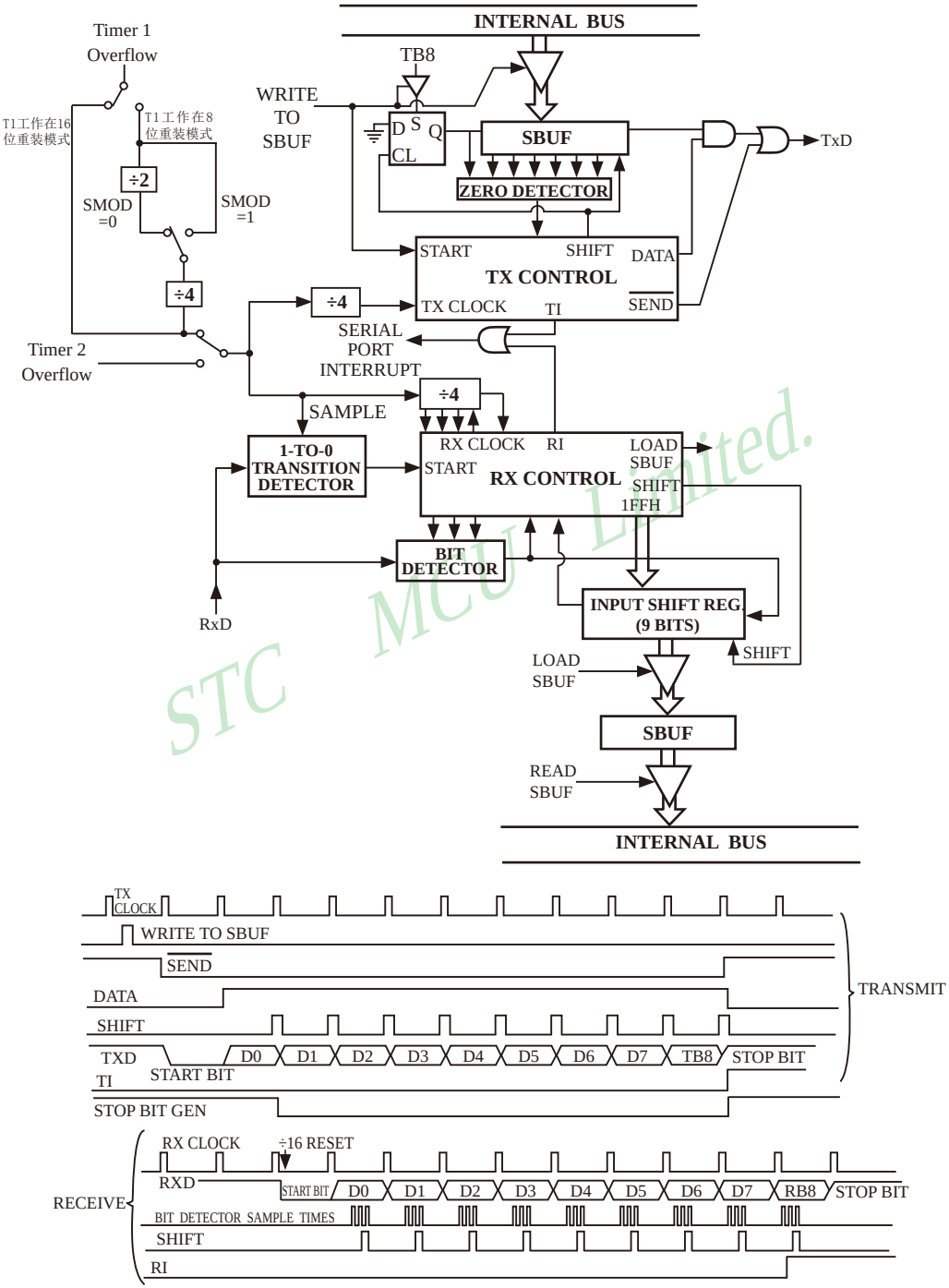

Serial Port Mode 3

STC MCU Limited.

8.3 Buad Rates Setting of UART1 and Demo Program

The baud rate in Mode 0 is fixed:

$$\text{Mode 0 Baud Rate} = \frac{\text{SYSclk}}{12} \quad \text{when AUXR.5/UART_M0x6 =0}$$

$$\text{or} = \frac{\text{SYSclk}}{2} \quad \text{when AUXR.5/UART_M0x6 =1}$$

The baud rate in Mode 2 depends on the value of bit SMOD in Special Function Register PCON. If SMOD =0 (which is the value on reset), the baud rate $^1/_{64}$ the System clock cycle. If SMOD = 1, the baud rate is $^1/_{32}$ the System clock cycle .

$$\text{Mode 2 Baud Rate} = \frac{2^{\text{SMOD}}}{64} \times (\text{SYSclk})$$

In the STC15 series MCU, the baud rates in Modes 1 and 3 are determined by Timer 1 or Timer 2 overflow rate. The baud rate in Mode 1 and 3 are variable:

The calculating formula of buad-rate when UART1 select T2 as its baud-rate generator is shown below :

Baud-Rate of UART1 = (T2 overflow)/4. Note: the bau-rate is independent of SMOD bit.

If T2 works in 1T mode (AUXR.2/T2x12=1), the T2 overflow = SYSclk / (65536 - [RL_TH2, RL_TL2]) ;
So, Baud-Rate of UART1 = SYSclk / (65536 - [[RL_TH2, RL_TL2]) / 4

If T2 works in 12T mode (AUXR.2/T2x12=0), the T2 overflow = SYSclk / 12 / (65536 - [RL_TH2, RL_TL2]) ;
So, Baud-Rate of UART1 = SYSclk / 12 / (65536 - [[RL_TH2, RL_TL2]) / 4

RL_TH2 is the reloaded register of **T2H, and RL_TL2** is the reload register of T2L in above formula.

When UART1 select T1 as its baud-rate generator and T1 is working in mode 0 (16-bit auto-reload timer/counter), The calculating formula of buad-rate is shown below :

Baud-Rate of UART1 = (T1 overflow)/4. Note: the bau-rate is independent of SMOD bit.

If T1 works in 1T mode (AUXR.6/T1x12=1), the T1 overflow = SYSclk / (65536 - [RL_TH1, RL_TL1]) ;
So, Baud-Rate of UART1 = SYSclk / (65536 - [[RL_TH1, RL_TL1]) / 4

If T1 works in 12T mode (AUXR.6/T1x12=0), the T1 overflow = SYSclk / 12 / (65536 - [RL_TH1, RL_TL1]) ;
So, Baud-Rate of UART1 = SYSclk / 12 / (65536 - [[RL_TH1, RL_TL1]) / 4

RL_TH1 is the reloaded register of **TH1, and RL_TL1** is the reload register of TL1 in above formula.

When UART1 select T1 as its baud-rate generator and T1 is working in mode 3 (8-bit auto-reload timer/counter), The calculating formula of buad-rate is shown below :

Baud-Rate of UART1 = ($2^{\text{SMOD}}/32$) × (T1 overflow).

If T1 works in 1T mode (AUXR.6/T1x12=1), the T1 overflow = SYSclk / (256 - TH1) ;
So, Baud-Rate of UART1 = ($2^{\text{SMOD}}/32$)×SYSclk / (256 - TH1)

If T1 works in 12T mode (AUXR.6/T1x12=0), the T1 overflow = SYSclk / 12 / (256 - TH1) ;
So, Baud-Rate of UART1 = ($2^{\text{SMOD}}/32$)×SYSclk / 12 / (256 - TH1)

STC MCU Limited.

Now take UART1 selecting T1 as its baud-rate generator for example.

When T1 is used as the baud rate generator, the T1 interrupt should be disabled in this application. The T1 itself can be configured for either "timer" or "counter" operation, and in any of its 3 running modes. In the most typcial applications, it is configured for "timer" operation, in the auto-reload mode (high nibble of TMOD = 0010B).

One can achieve very low baud rate with Timer 1 by leaving the Timer 1 interrupt enabled, and configuring the Timer to run as a 16-bit timer (high nibble of TMOD = 0001B), and using the Timer 1 interrupt to do a l6-bit software reload.

The following figure lists various commonly used baud rates and how they can be obtained from Timer 1.

Baud Rate	System clock Frequency SYSclk	SMOD	Timer 1		
			C/$\overline{T}$	Mode	Reload Value
Mode 0 MAX:1MHZ	12MHZ	X	X	X	X
Mode 2 MAX:375K	12MHZ	1	X	X	X
Mode 1,3:62.5K	12MHZ	1	0	2	FFH
19.2K	11.059MHZ	1	0	2	FDH
9.6K	11.059MHZ	0	0	2	FDH
4.8K	11.059MHZ	0	0	2	FAH
2.4K	11.059MHZ	0	0	2	F4H
1.2K	11.059MHZ	0	0	2	E8H
137.5	11.986MHZ	0	0	2	1DH
110	6MHZ	0	0	2	72H
110	12MHZ	0	0	1	FEEBH

Timer 1 Generated Commonly Used Baud Rates

Initialize the baud rate :

```
        ⋮
MOV     TMOD,   #20H        ;0010,0000  set T1 for 8-bit auto-reload timer/counter
MOV     TH1,    #xxH        ;set T1 preload value
MOV     TL1,    #xxH
SETB    TR1                 ;Start to run T1
MOV     PCON，  #80H        ;SMOD=1
MOV     SCON,   #50H        ;UART1 in mode 1, 8-bit UART with variable baud-rate
        ⋮
```

The above program segment can acheive the set of T1 and UART operation mode.

STC MCU Limited.

8.4 Demo Program of UART1 (C and ASM)

8.4.1 Demo Program using T2 as UART1 Baud-Rate Generator (C&ASM)

1. C Program Listing

```
/*---------------------------------------------------------------------------------------------------*/
/* --- STC MCU  Limited. ---------------------------------------------------------------------------*/
/* --- Exam Program using Timer/Counter 2  as UART1 baud-rate generator ----------------------------*/
/* --- Mobile: (86)13922805190 ---------------------------------------------------------------------*/
/* --- Fax: 86-755-82905966 ------------------------------------------------------------------------*/
/* --- Tel: 86-755-82948412 ------------------------------------------------------------------------*/
/* --- Web: www.STCMCU.com -------------------------------------------------------------------------*/
/* If you want to use the program or the program referenced in the  ----------------------------*/
/* article, please specify in which data and procedures from STC    ----------------------------*/
/*---- In Keil C development environment, select the Intel 8052 to compiling ----------------*/
/*----  And only contain < reg51.h > as header file ------------------------------------------*/
/*---------------------------------------------------------------------------------------------------*/

//suppose the frequency of test chip is 18.432MHz

#include "reg51.h"
#include "intrins.h"

typedef unsigned char    BYTE;
typedef unsigned int     WORD;

#define   FOSC    18432000L                    //System frequency
#define   BAUD    115200                       //UART1 baud-rate

#define   NONE_PARITY       0                  //none parity
#define   ODD_PARITY        1                  //odd parity
#define   EVEN_PARITY       2                  //even parity
#define   MARK_PARITY       3                  //mark parity
#define   SPACE_PARITY      4                  //space parity

#define PARITYBIT EVEN_PARITY                  //define the parity bit

sfr       AUXR    =       0x8e;                //Auxiliary register
sfr       T2H     =       0xd6;
sfr       T2L     =       0xd7;

sbit      P22     =       P2^2;

bit busy;

void SendData(BYTE dat);
void SendString(char *s);
```

STC MCU Limited.

```
void main()
{
#if (PARITYBIT == NONE_PARITY)

    SCON    =   0x50;                                   //8-bit variable baud-rate
#elif (PARITYBIT == ODD_PARITY) || (PARITYBIT == EVEN_PARITY) || (PARITYBIT == MARK_PARITY)
    SCON    =   0xda;                                   //9-bit variable baud-rate,
                                                        //the parity bit is initialized for 1
#elif (PARITYBIT == SPACE_PARITY)
    SCON    =   0xd2;                                   //9-bit variable baud-rate,
                                                        //the parity bit is initialized for 0
#endif

    T2L     =   (65536 - (FOSC/4/BAUD));                //Set the preload value
    T2H     =   (65536 - (FOSC/4/BAUD))>>8;
    AUXR    =   0x14;                                   //T2 in 1T mode, and run T2
    AUXR    |=  0x01;                                   //select T2 as UART1 baud-rate generator
    ES      =   1;                                      //enable UART1 interrupt
    EA      =   1;

    SendString("STC15W4K32S4\r\nUart Test !\r\n");
    while(1);
}

/*----------------------------
UART Interrupt Service Routine
----------------------------*/
void Uart() interrupt 4 using 1
{
    if (RI)
    {
        RI = 0;                                         //clear RI
        P0 = SBUF;                                      //serial data is shown in P0
        P22 = RB8;                                      //P2.2 display the parity bit
    }
    if (TI)
    {
        TI = 0;                                         //clear TI
        busy = 0;                                       //clear busy flag
    }
}

/*----------------------------
Send UART data
----------------------------*/
void SendData(BYTE dat)
{
    while (busy);                                       //wait to finish sending the previous data
    ACC = dat;                                          //access to the parity bit ---- P (PSW.0)
```

STC MCU Limited

```
        if (P)
        {
        #if (PARITYBIT == ODD_PARITY)

                TB8 = 0;                        //the parity bit is set for 0
        #elif (PARITYBIT == EVEN_PARITY)
                TB8 = 1;                        //the parity bit is set for 1
        #endif
        }
        else
        {
        #if (PARITYBIT == ODD_PARITY)
                TB8 = 1;                        //the parity bit is set for 1
        #elif (PARITYBIT == EVEN_PARITY)
                TB8 = 0;                        //the parity bit is set for 0
        #endif
         }
        busy = 1;
        SBUF = ACC;
}

/*---------------------------
Send string
---------------------------*/
void SendString(char *s)
{
        while (*s)
        {
                SendData(*s++);
        }
}
```

STC MCU Limited.

2. Assembler Listing

```
/*---------------------------------------------------------------------------------------------------*/
/* --- STC MCU  Limited. ---------------------------------------------------------------------------*/
/* --- Exam Program using Timer/Counter 2  as UART1 baud-rate generator ----------------------------*/
/* --- Mobile: (86)13922805190 ---------------------------------------------------------------------*/
/* --- Fax: 86-755-82905966 ------------------------------------------------------------------------*/
/* --- Tel: 86-755-82948412 ------------------------------------------------------------------------*/
/* --- Web: www.STCMCU.com -------------------------------------------------------------------------*/
/* If you want to use the program or the program referenced in the  ----------------------------*/
/* article, please specify in which data and procedures from STC    ----------------------------*/
/*---- In Keil C development environment, select the Intel 8052 to compiling ----------------*/
/*----  And only contain < reg51.h > as header file ------------------------------------------------*/
/*---------------------------------------------------------------------------------------------------*/

//suppose the frequency of test chip is 18.432MHz

#define   NONE_PARITY   0                   //none parity
#define   ODD_PARITY    1                   //odd parity
#define   EVEN_PARITY   2                   //even parity
#define   MARK_PARITY   3                   //mark parity
#define   SPACE_PARITY  4                   //space parity

#define   PARITYBIT     EVEN_PARITY         //define the parity bit

//-----------------------------------------

AUXR    EQU     08EH                        //Auxiliary register
T2H     DATA    0D6H
T2L     DATA    0D7H

//-----------------------------------------
BUSY    BIT     20H.0
//-----------------------------------------
        ORG     0000H
        LJMP    MAIN

        ORG     0023H
        LJMP    UART_ISR
//-----------------------------------------
        ORG     0100H
MAIN:
        CLR     BUSY
        CLR     EA
        MOV     SP,     #3FH

#if (PARITYBIT == NONE_PARITY)
        MOV     SCON,   #50H                //8-bit variable baud-rate
#elif (PARITYBIT == ODD_PARITY) || (PARITYBIT == EVEN_PARITY) || (PARITYBIT == MARK_PARITY)
```

STC MCU Limited.

```
        MOV     SCON,   #0DAH                   //9-bit variable baud-rate
                                                //the parity bit is initialized for 1
#elif (PARITYBIT == SPACE_PARITY)
        MOV     SCON,   #0D2H                   //9-bit variable baud-rate
                                                //the parity bit is initialized for 0
#endif
//---------------------------------
        MOV     T2L,    #0D8H                   //Set the preload value (65536-18432000/4/115200)
        MOV     T2H,    #0FFH
        MOV     AUXR,   #14H                    //T2 in 1T mode,  and run T2
        ORL     AUXR,   #01H                    //select T2 as UART1 baud-rate generator
         SETB   ES                              //enable UART1 interrupt
        SETB    EA

        MOV     DPTR,   #TESTSTR
        LCALL   SENDSTRING

        SJMP    $
;-----------------------------------------
TESTSTR:
        DB  "STC15W4K32S4 Uart1 Test !",0DH,0AH,0

;/*---------------------------
;UART Interrupt Service Routine
;---------------------------*/
UART_ISR:
        PUSH    ACC
        PUSH    PSW
        JNB     RI,     CHECKTI
        CLR     RI                              //clear RI
        MOV     P0,     SBUF                    //serial data is shown in P0
        MOV     C,      RB8
        MOV     P2.2,   C                       //P2.2 display the parity bit
CHECKTI:
        JNB     TI,     ISR_EXIT
        CLR     TI                              //clear TI
        CLR     BUSY                            //clear busy flag
ISR_EXIT:
        POP     PSW
        POP     ACC
        RETI

;/*---------------------------
;Send UART data
;---------------------------*/
SENDDATA:
        JB      BUSY,   $                       //wait to finish sending the previous data
        MOV     ACC,    A                       //access to the parity bit ---- P (PSW.0)
        JNB     P,      EVEN1INACC
```

STC MCU Limited.

```
ODD1INACC:
#if (PARITYBIT == ODD_PARITY)
        CLR     TB8                     //the parity bit is set for 0
#elif (PARITYBIT == EVEN_PARITY)
        SETB    TB8                     //the parity bit is set for 1
#endif
        SJMP    PARITYBITOK
EVEN1INACC:
#if (PARITYBIT == ODD_PARITY)
        SETB    TB8                     //the parity bit is set for 1
#elif (PARITYBIT == EVEN_PARITY)
        CLR     TB8                     //the parity bit is set for 0
#endif
PARITYBITOK:
        SETB    BUSY
        MOV     SBUF,   A
        RET

;/*----------------------------
;Send string
//----------------------------*/
SENDSTRING:
        CLR     A
        MOVC    A,      @A+DPTR
        JZ      STRINGEND
        INC     DPTR
        LCALL   SENDDATA
        SJMP    SENDSTRING
STRINGEND:
        RET
//-----------------------------------------
        END
```

STC MCU Limited.

8.4.2 Demo Program using T1 as UART1 Baud-Rate Generator(C&ASM)
—— T1 in Mode 0 (16-bit Auto-Reload Timer/Counter)

1. C Program Listing

```
/*---------------------------------------------------------------------------------------------------*/
/* --- STC MCU  Limited. ---------------------------------------------------------------------------*/
/* --- Exam Program using Timer/Counter 1  as UART1 baud-rate generator ----------------------------*/
/* --- Mobile: (86)13922805190 ---------------------------------------------------------------------*/
/* --- Fax: 86-755-82905966 ------------------------------------------------------------------------*/
/* --- Tel: 86-755-82948412 ------------------------------------------------------------------------*/
/* --- Web: www.STCMCU.com -------------------------------------------------------------------------*/
/* If you want to use the program or the program referenced in the  ----------------------------*/
/* article, please specify in which data and procedures from STC    ----------------------------*/
/*---- In Keil C development environment, select the Intel 8052 to compiling ----------------*/
/*----  And only contain < reg51.h > as header file ------------------------------------------*/
/*---------------------------------------------------------------------------------------------------*/

//suppose the frequency of test chip is 18.432MHz

#include "reg51.h"
#include "intrins.h"

typedef unsigned char    BYTE;
typedef unsigned int     WORD;

#define  FOSC    18432000L                    //System frequency
#define  BAUD    115200                       //UART1 baud-rate

#define  NONE_PARITY        0                 //none parity
#define  ODD_PARITY         1                 //odd parity
#define  EVEN_PARITY        2                 //even parity
#define  MARK_PARITY        3                 //mark parity
#define  SPACE_PARITY       4                 //space parity

#define PARITYBIT EVEN_PARITY                 //define the parity bit

sfr      AUXR   =    0x8e;                    //Auxiliary register
sbit     P22    =    P2^2;
bit      busy;

void SendData(BYTE dat);
void SendString(char *s);
```

STC MCU Limited.

```
void main()
{
#if (PARITYBIT == NONE_PARITY)
    SCON = 0x50;                                    //8-bit variable baud-rate
#elif (PARITYBIT == ODD_PARITY) || (PARITYBIT == EVEN_PARITY) || (PARITYBIT == MARK_PARITY)
    SCON = 0xda;                                    //9-bit variable baud-rate
                                                    //the parity bit is initialized for 1
#elif (PARITYBIT == SPACE_PARITY)
    SCON = 0xd2;                                    //9-bit variable baud-rate
                                                    //the parity bit is initialized for 0
#endif

    AUXR = 0x40;                                    //T1 in 1T mode
    TMOD = 0x00;                                    //T1 in mode 0 (16-bit auto-relaod timer/counter)
    TL1 = (65536 - (FOSC/4/BAUD));                  //Set the preload value
    TH1 = (65536 - (FOSC/4/BAUD))>>8;
    TR1 = 1;                                        //start to run T1
    ES = 1;                                         //Enable UART1 interrupt
    EA = 1;

    SendString("STC15W4K32S4\r\nUart Test !\r\n");
    while(1);
}

/*----------------------------
UART Interrupt Service Routine
----------------------------*/
void Uart() interrupt 4 using 1
{
    if (RI)
    {
        RI = 0;                                     //clear RI
        P0 = SBUF;                                  //serial data is shown in P0
        P22 = RB8;                                  //P2.2 display the parity bit
    }
    if (TI)
    {
        TI = 0;                                     //clear TI
        busy = 0;                                   //clear busy flag
    }
}

/*----------------------------
Send UART data
----------------------------*/
```

STC MCU Limited.

```
void SendData(BYTE dat)
{
        while (busy);                           //wait to finish sending the previous data
        ACC = dat;                              //access to the parity bit ---- P (PSW.0)
        if (P)
        {
        #if (PARITYBIT == ODD_PARITY)
                TB8 = 0;                        //the parity bit is set for 0
        #elif (PARITYBIT == EVEN_PARITY)
                TB8 = 1;                        //the parity bit is set for 1
        #endif
        }
        else
        {
        #if (PARITYBIT == ODD_PARITY)
                TB8 = 1;                        //the parity bit is set for 1
        #elif (PARITYBIT == EVEN_PARITY)
                TB8 = 0;                        //the parity bit is set for 0
        #endif
        }
        busy = 1;
        SBUF = ACC;
}

/*----------------------------
Send string
----------------------------*/
void SendString(char *s)
{
        while (*s)
        {
                SendData(*s++);
        }
}
```

STC MCU Limited.

2. Assembler Listing

```
/*---------------------------------------------------------------------------------------------------------*/
/* --- STC MCU  Limited. ---------------------------------------------------------------------------------*/
/* --- Exam Program using Timer/Counter 1  as UART1 baud-rate generator ----------------------------------*/
/* --- Mobile: (86)13922805190 ---------------------------------------------------------------------------*/
/* --- Fax: 86-755-82905966 ------------------------------------------------------------------------------*/
/* --- Tel: 86-755-82948412 ------------------------------------------------------------------------------*/
/* --- Web: www.STCMCU.com -------------------------------------------------------------------------------*/
/* If you want to use the program or the program referenced in the  ----------------------------*/
/* article, please specify in which data and procedures from STC    ----------------------------*/
/*---- In Keil C development environment, select the Intel 8052 to compiling ----------------*/
/*----  And only contain < reg51.h > as header file ------------------------------------------------*/
/*---------------------------------------------------------------------------------------------------------*/

//suppose the frequency of test chip is 18.432MHz

#define   NONE_PARITY   0                 //none parity
#define   ODD_PARITY    1                 //odd parity
#define   EVEN_PARITY   2                 //even parity
#define   MARK_PARITY   3                 //mark parity
#define   SPACE_PARITY  4                 //space parity

#define   PARITYBIT EVEN_PARITY           //define the parity bit

//-----------------------------------------

AUXR    EQU     08EH                    //Auxiliary register
BUSY    BIT     20H.0
//-----------------------------------------

        ORG     0000H
        LJMP    MAIN

        ORG     0023H
        LJMP    UART_ISR
//-----------------------------------------
        ORG     0100H
MAIN:
        CLR     BUSY
        CLR     EA
        MOV     SP,     #3FH

#if (PARITYBIT == NONE_PARITY)
        MOV     SCON,   #50H            //8-bit variable baud-rate
```

STC MCU Limited.

```
#elif (PARITYBIT == ODD_PARITY) || (PARITYBIT == EVEN_PARITY) || (PARITYBIT == MARK_PARITY)
        MOV     SCON,   #0DAH           //9-bit variable baud-rate, the parity bit is initialized for 1
#elif (PARITYBIT == SPACE_PARITY)
        MOV     SCON,   #0D2H           //9-bit variable baud-rate, the parity bit is initialized for 0
#endif

//---------------------------------
        MOV     AUXR,   #40H            //T1 in 1T mode
        MOV     TMOD,   #00H            //T1 in mode 0 (16-bit auto-relaod timer/counter)
        MOV     TL1,    #0D8H           //Set the preload value (65536-18432000/4/115200)
        MOV     TH1,    #0FFH
        SETB    TR1                     //start to run T1
        SETB    ES                      //Enable UART1 interrupt
        SETB    EA

        MOV     DPTR,   #TESTSTR
        LCALL   SENDSTRING

        SJMP    $
;-----------------------------------------
TESTSTR:
        DB  "STC15W4K32S4 Uart1 Test !",0DH,0AH,0

;/*-------------------------------
;UART Interrupt Service Routine
;-------------------------------*/
UART_ISR:
        PUSH    ACC
        PUSH    PSW
        JNB     RI,     CHECKTI
        CLR     RI                              //clear RI
        MOV     P0,     SBUF                    //serial data is shown in P0
        MOV     C,      RB8
        MOV     P2.2,   C                       //P2.2 display the parity bit

CHECKTI:
        JNB     TI,     ISR_EXIT
        CLR     TI                              //clear TI
        CLR     BUSY                            //clear busy flag

ISR_EXIT:
        POP     PSW
        POP     ACC
        RETI
```

STC MCU Limited.

```
;/*----------------------------
;Send serial data
;----------------------------*/
SENDDATA:
        JB      BUSY,   $                       //wait to finish sending the previous data
        MOV     ACC,    A                       //access to the parity bit ---- P (PSW.0)
        JNB     P,      EVEN1INACC
ODD1INACC:
#if (PARITYBIT == ODD_PARITY)
        CLR     TB8                             //the parity bit is set for 0
#elif (PARITYBIT == EVEN_PARITY)
        SETB    TB8                             //the parity bit is set for 1
#endif
        SJMP    PARITYBITOK
EVEN1INACC:
#if (PARITYBIT == ODD_PARITY)
        SETB    TB8                             //the parity bit is set for 1
#elif (PARITYBIT == EVEN_PARITY)
        CLR     TB8                             //the parity bit is set for 0
#endif
PARITYBITOK:
        SETB    BUSY
        MOV     SBUF,   A
        RET

;/*----------------------------
;Send string
//----------------------------*/
SENDSTRING:
        CLR     A
        MOVC    A,      @A+DPTR
        JZ      STRINGEND
        INC     DPTR
        LCALL   SENDDATA
        SJMP    SENDSTRING
STRINGEND:
        RET

//-----------------------------------------

        END
```

STC MCU Limited.

8.4.3 Demo Program using T1 as UART1 Baud-Rate Generator(C&ASM)
—— T1 in Mode 2 (8-bit Auto-Reload Timer/Counter)

1. C Program Listing

```
/*---------------------------------------------------------------------------------------------------*/
/* --- STC MCU  Limited. ---------------------------------------------------------------------------*/
/* --- Exam Program using 8-bit auto-reload timer/counter 1 as UART1 baud-rate generator -*/
/* --- Mobile: (86)13922805190 ---------------------------------------------------------------------*/
/* --- Fax: 86-755-82905966 ------------------------------------------------------------------------*/
/* --- Tel: 86-755-82948412 ------------------------------------------------------------------------*/
/* --- Web: www.STCMCU.com -------------------------------------------------------------------------*/
/* If you want to use the program or the program referenced in the  ----------------------------*/
/* article, please specify in which data and procedures from STC    ----------------------------*/
/*---- In Keil C development environment, select the Intel 8052 to compiling ----------------*/
/*----  And only contain < reg51.h > as header file ---------------------------------------------*/
/*---------------------------------------------------------------------------------------------------*/

//suppose the frequency of test chip is 18.432MHz

#include "reg51.h"

#include "intrins.h"

typedef unsigned char    BYTE;
typedef unsigned int     WORD;

#define   FOSC    18432000L                 //system frequency
#define   BAUD    115200                    //baud-rate

#define   NONE_PARITY       0               //none parity
#define   ODD_PARITY        1               //odd parity
#define   EVEN_PARITY       2               //even parity
#define   MARK_PARITY       3               //mark parity
#define   SPACE_PARITY      4               //space parity

#define PARITYBIT EVEN_PARITY               //define the parity bit

sfr       AUXR    =       0x8e;             //Auxiliary register
sbit      P22     =       P2^2;
bit       busy;

void SendData(BYTE dat);
void SendString(char *s);
```

STC MCU Limited.

```
void main()
{
#if (PARITYBIT == NONE_PARITY)
	SCON = 0x50;				//8-bit variable baud-rate
#elif (PARITYBIT == ODD_PARITY) || (PARITYBIT == EVEN_PARITY) || (PARITYBIT == MARK_PARITY)
	SCON = 0xda;				//9-bit variable baud-rate, the parity bit is initialized for 1
#elif (PARITYBIT == SPACE_PARITY)
	SCON	=	0xd2;			//9-bit variable baud-rate, the parity bit is initialized for 0
#endif

	AUXR	=	0x40;			//T1 in 1T mode
	TMOD	=	0x20;			//T1 in mode2 (8-bit auto-reload timer/counter)
	TL1	=	(256 - (FOSC/32/BAUD));	//set the preload value
	TH1	=	(256 - (FOSC/32/BAUD));
	TR1	=	1;			//run T1
	ES	=	1;			//enable UART1 interrupt
	EA	=	1;

	SendString("STC15W4K32S4\r\nUart Test !\r\n");
	while(1);
}

/*----------------------------
UART Interrupt Service Routine
----------------------------*/
void Uart() interrupt 4 using 1
{
	if (RI)
	{
		RI	=	0;		//clear RI
		P0	=	SBUF;		//serial data is shown in P0
		P22	=	RB8;		//P2.2 display parity bit
	}
	 if (TI)
	{
		TI	=	0;		//clear TI
		busy	=	0;		//clear busy flag
	}
}

/*----------------------------
Send UART data
----------------------------*/
```

STC MCU Limited.

```
void SendData(BYTE dat)
{
        while (busy);                           //wait to finish sending the previous data
        ACC = dat;                              //access to the parity bit ---- P (PSW.0)

        if (P)
        {
        #if (PARITYBIT == ODD_PARITY)
                TB8 = 0;                        //the parity bit is set for 0
        #elif (PARITYBIT == EVEN_PARITY)
                TB8 = 1;                        //the parity bit is set for 1
        #endif
        }

        else
        {
        #if (PARITYBIT == ODD_PARITY)
                TB8 = 1;                        //the parity bit is set for 1
        #elif (PARITYBIT == EVEN_PARITY)
                TB8 = 0;                        //the parity bit is set for 0
        #endif
        }
        busy = 1;
        SBUF = ACC;                             //write the data into SBUF of UART
}

/*----------------------------
Send string
----------------------------*/
void SendString(char *s)
{
        while (*s)
        {
                SendData(*s++);
        }
}
```

STC MCU Limited.

2. Assembler Listing

```
/*---------------------------------------------------------------------------------------------------------*/
/* --- STC MCU  Limited. ---------------------------------------------------------------------------------*/
/* --- Exam Program using 8-bit auto-reload timer/counter 1 as UART1 baud-rate generator -*/
/* --- Mobile: (86)13922805190 ---------------------------------------------------------------------------*/
/* --- Fax: 86-755-82905966 ------------------------------------------------------------------------------*/
/* --- Tel: 86-755-82948412 ------------------------------------------------------------------------------*/
/* --- Web: www.STCMCU.com -------------------------------------------------------------------------------*/
/* If you want to use the program or the program referenced in the  ----------------------------*/
/* article, please specify in which data and procedures from STC    ----------------------------*/
/*---- In Keil C development environment, select the Intel 8052 to compiling ------------------*/
/*----  And only contain < reg51.h > as header file ------------------------------------------------*/
/*---------------------------------------------------------------------------------------------------------*/

//suppose the frequency of test chip is 18.432MHz

#define   NONE_PARITY   0                 //none parity
#define   ODD_PARITY    1                 //odd parity
#define   EVEN_PARITY   2                 //even parity
#define   MARK_PARITY   3                 //mark parity
#define   SPACE_PARITY  4                 //space parity

#define   PARITYBIT  EVEN_PARITY          //define the parity bit

//---------------------------------------
AUXR    EQU     08EH                      //Auxiliary register
BUSY    BIT     20H.0
//---------------------------------------
        ORG     0000H
        LJMP    MAIN

        ORG     0023H
        LJMP    UART_ISR
//---------------------------------------
        ORG     0100H
MAIN:
        CLR     BUSY
        CLR     EA
        MOV     SP,     #3FH

#if (PARITYBIT == NONE_PARITY)
        MOV     SCON,   #50H            //8-bit variable baud-rate
#elif (PARITYBIT == ODD_PARITY) || (PARITYBIT == EVEN_PARITY) || (PARITYBIT == MARK_PARITY)
```

STC MCU Limited.

```
MOV     SCON,   #0DAH                   //9-bit variable baud-rate, the parity bit is initialized for 1
#elif (PARITYBIT == SPACE_PARITY)
        MOV     SCON,   #0D2H           //9-bit variable baud-rate, the parity bit is initialized for 0
#endif
//---------------------------------
        MOV     AUXR,   #40H            //T1 in 1T mode
        MOV     TMOD,   #20H            //T1 in mode2 (8-bit auto-reload timer/counter)
        MOV     TL1,    #0FBH           //set the preload value (256-18432000/32/115200)
        MOV     TH1,    #0FBH
        SETB    TR1                     //run T1
        SETB    ES                      //enable UART1 interrupt
        SETB    EA

        MOV     DPTR,   #TESTSTR
        LCALL   SENDSTRING

        SJMP    $
;-----------------------------------------
TESTSTR:
        DB  "STC15W4K32S4 Uart1 Test !",0DH,0AH,0

;/*------------------------------
;UART Interrupt Service Routine
;------------------------------*/
UART_ISR:
        PUSH    ACC
        PUSH    PSW
        JNB     RI,     CHECKTI
        CLR     RI                      //clear RI
        MOV     P0,     SBUF            //serial data is shown in P0
        MOV     C,      RB8
        MOV     P2.2,   C               //P2.2 display parity bit
CHECKTI:
        JNB     TI,     ISR_EXIT
        CLR     TI                      //clear TI
        CLR     BUSY                    //clear busy flag
ISR_EXIT:
        POP     PSW
        POP     ACC
        RETI

;/*----------------------------
;Send UART data
;----------------------------*/
```

STC MCU Limited.

```
SENDDATA:
        JB      BUSY,   $                       //wait to finish sending the previous data
        MOV     ACC,    A                       //access to the parity bit ---- P (PSW.0)
        JNB     P,      EVEN1INACC
ODD1INACC:
#if (PARITYBIT == ODD_PARITY)
        CLR     TB8                             //the parity bit is set for 0
#elif (PARITYBIT == EVEN_PARITY)
        SETB    TB8                             //the parity bit is set for 1
#endif
        SJMP    PARITYBITOK
EVEN1INACC:
#if (PARITYBIT == ODD_PARITY)
        SETB    TB8                             //the parity bit is set for 1
#elif (PARITYBIT == EVEN_PARITY)
        CLR     TB8                             //the parity bit is set for 0
#endif
PARITYBITOK:
        SETB    BUSY
        MOV     SBUF,   A                       //write the data into SBUF of UART
        RET

;/*---------------------------
;Send string
//---------------------------*/
SENDSTRING:
        CLR     A
        MOVC    A,      @A+DPTR
        JZ      STRINGEND
        INC     DPTR
        LCALL   SENDDATA
        SJMP    SENDSTRING
STRINGEND:
        RET
//-----------------------------------------
        END
```

STC MCU Limited.

8.5 Frame Error Detection

When used for frame error detect, the UART looks for missing stop bits in the communication. A missing bit will set the FE bit in the SCON register. The FE bit shares the SCON.7 bit with SM0 and the function of SCON.7 is determined by PCON.6 (SMOD0). If SMOD0 is set then SCON.7 functions as FE. SCON.7 functions as SM0 when SMOD0 is cleared.When used as FE, SCON.7 can only be cleared by software. Refer to the following figure.

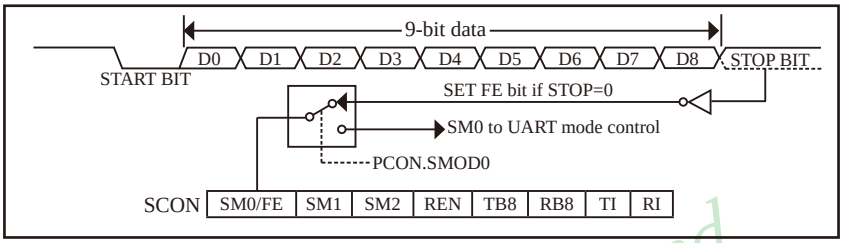

UART Frame Error Detection

8.6 Multiprocessor Communications

Modes 2 and 3 have a special provision for multiproceasor communications. In these modes, 9 data bits are received. The 9th one goes into RB8. Then comes a stop bit. The port can be programmed such that when the stop bit is received,the serial port interrupt will be activated only if RB8 = 1. This feature is enabled by setting bit SM2 in SCON. A way to use this feature in multiprocessor systems is as follows.

When the master processor wants to transmit a block of data to one of several slaves, it first sends out an address byte which identifies the target slave. An address byte differs from a data byte in that the 9th bit is 1 in an address byte and 0 in a data byte. With SM2 = 1, no slave will be interrupted by a data byte. An address byte, however,will interrupt all slaves, so that each slave can examine the received byte and see if it is being addressed. The addressed slave will clear its SM2 bit and prepare to receive the data bytes that will be coming. The slaves that weren't being addressed leave their SM2s set and go on about their business, ignoring the coming data bytes.

SM2 has no effect in Mode 0,and in Mode 1 can be used to check the validity of the stop bit. In a Mode 1 reception, if SM2 = 1, the receive interrupt will not be activated unless a vatid stop bit is received.

The following figure shows a master MCU on the network, which can instruct individual slave devices to set or clear their SM2 bits to alter the configuration so that they either receive or ignore particular messages.

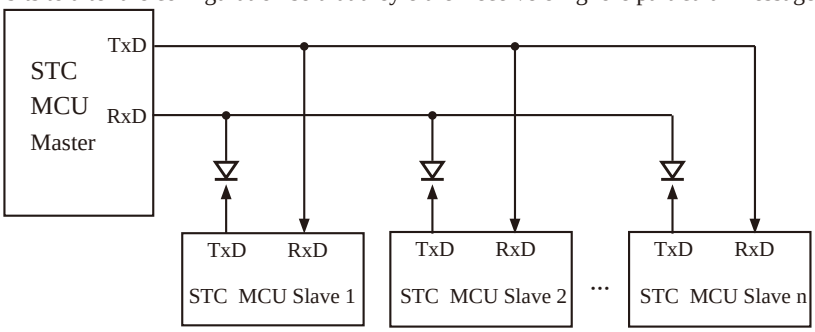

STC MCU Limited.

8.7 Automatic Address Recognition of UART1

8.7.1 Special Fucntion Registers about Automatic Address Recognition

Symbol	Description	Address	Bit Address and Symbol MSB LSB								Value after Power-on or Reset
SCON	Serial Control	98H	SM0/FE	SM1	SM2	REN	TB8	RB8	TI	RI	0000 0000B
SBUF	Serial Buffer	99H									xxxx xxxxB
SADEN	Slave Address Mask	B9H									0000 0000B
SADDR	Slave Address	A9H									0000 0000B

1. Serial Port 1 (UART1) Control Register: SCON

SCON: Serial port Control Register (Bit-Addressable)

SFR name	Address	bit	B7	B6	B5	B4	B3	B2	B1	B0
SCON	98H	name	SM0/FE	SM1	SM2	REN	TB8	RB8	TI	RI

FE : Framing Error bit. The SMOD0 bit must be set to enable access to the FE bit
0 : The FE bit is not cleared by valid frames but should be cleared by software.
1 : This bit set by the receiver when an invalid stop bit id detected.

SM0,SM1 : Serial Port Mode Bit 0/1.

SM0	SM1	Mode	Description	Baud Rate
0	0	Mode 0	synchronous shift serial mode: 8-bit shift register	If UART_M0x6 = 0, baud rate = SYSclk/12, If UART_M0x6 = 1, baud rate = SYSclk / 2
0	1	Mode 1	8-bit UART, baud-rate variable	If UART1 select Timer 2 or Timer 1 (as 16-bit auto-reload timer), baud rate= (T1 or T2 overflow)/4. If UART1 select Timer 1 (as 8-bit auto-reload timer), baud rate = (2^{SMOD}/32)×(T1 overflow)
1	0	Mode 2	9-bit UART	(2^{SMOD} / 64) x SYSclk SYSclk is system clock frequency
1	1	Mode 3	9-bit UART, baud-rate variable	If UART1 select Timer 2 or Timer 1 (as 16-bit auto-reload timer), baud rate= (T1 or T2 overflow)/4. If UART1 select Timer 1 (as 8-bit auto-reload timer), baud rate = (2^{SMOD}/32)×(T1 overflow)

STC MCU Limited.

SM2 : Enable the automatic address recognition feature in mode 2 and 3. If SM2=1, RI will not be set unless the received 9th data bit is 1, indicating an address, and the received byte is a Given or Broadcast address. In mode1, if SM2=1 then RI will not be set unless a valid stop Bit was received, and the received byte is a Given or Broadcast address. In mode 0, SM2 should be 0.

REN : When set enables serial reception.

TB8 : The 9th data bit which will be transmitted in mode 2 and 3.

RB8 : In mode 2 and 3, the received 9th data bit will go into this bit.

TI : Transmit interrupt flag. Set by hardware when a byte of data has been transmitted by UART0 (after the 8th bit in 8-bit UART Mode, or at the beginning of the STOP bit in 9-bit UART Mode). When the UART0 interrupt is enabled, setting this bit causes the CPU to vector to the UART0 interrupt service routine. This bit must be cleared manually by software.

RI : Receive interrupt flag. Set to '1' by hardware when a byte of data has been received by UART0 (set at the STOP bit sam-pling time). When the UART0 interrupt is enabled, setting this bit to '1' causes the CPU to vector to the UART0 interrupt service routine. This bit must be cleared manually by software.

STC MCU Limited.

2. SBUF: Serial port 1 Data Buffer register (Non bit-addressable)

SFR name	Address	bit	B7	B6	B5	B4	B3	B2	B1	B0
SBUF	99H	name								

It is used as the buffer register in transmission and reception.The serial port buffer register (SBUF) is really two 8-bit registers. Writing to SBUF loads data to be transmitted, and reading SBUF accesses received data. These are two separate and distinct registers, the transimit write-only register, and the receive read-only register.

3. Slave Address Control registers SADEN and SADDR

SADEN: Slave Address Mask register

SADDR: Slave Address register

SADDR register is combined with SADEN register to form Given/Broadcast Address for automatic address recognition. In fact, SADEN function as the "mask" register for SADDR register. The following is the example for it.

SADDR = 1100 0000

SADEN = 1111 1101

Given = 1100 00x0 → The Given slave address will be checked except bit 1 is treated as "don't care".

The Broadcast Address for each slave is created by taking the logical OR of SADDR and SADEN. Zero in this result is considered as "don't care" and a Broad cast Address of all " don't care". This disables the automatic address detection feature.

8.7.2 Instruction of Automatic Address Recognition

Automatic Address Recognition is a future which allows the UART to recognize certain addresses in the serial bit stream by using hardware to make the comparisons. This feature saves a great deal of software overhead by eliminating the need for the software to examine every serial address which passes by the serial port. This feature is enabled by setting the SM2 bit in SCON. In the 9-bit UART modes, Mode 2 and Mode 3, the Receive interrupt flag(RI) will be automatically set when the received byte contains either the “Given” address or the “Broadcast” address. The 9-bit mode requires that the 9th information bit is a “1” to indicate that the received information is an address and not data.

The 8-bit mode is called Mode 1. In this mode the RI flag will be set if SM2 is enabled and the information received has a valid stop bit following the 8 address bits and the information is either a Given or Broadcast address.

Mode 0 is the Shift Register mode and SM2 is ignored.

Using the Automatic Address Recognition feature allows a master to selectively communicate with one or more slaves by invoking the given slave address or addresses. All of the slaves may be contacted by using the broadcast address. Two special function registers are used to define the slave’s address, SADDR, and the address mask, SADEN. SADEN is used to define which bits in the SADDR are to be used and which bits are “don’t care”. The SADEN mask can be logically ANDed with the SADDR to create the “Given” address which the master will use for addressing each of the slaves. Use of the Given address allows multiple slaves to be recognized which excluding others. The following examples will help to show the versatility of this scheme :

STC MCU Limited.

Slave 0 SADDR = 1100 0000
SADEN = 1111 1101
GIVEN = 1100 00x0

Slave 1 SADDR = 1100 0000
SADEN = 1111 1110
GIVEN = 1100 000x

In the previous example SADDR is the same and the SADEN data is used to differentiate between the two slaves. Slave 0 requires a “0” in bit 0 and it ignores bit 1. Slave 1 requires a “0” in bit 1 and bit 0 is ignored. A unique address for slave 0 would be 11000010 since slave 1 requires a “0” in bit 1. A unique address for slave 1 would be 11000001 since a “1” in bit 0 will exclude slave 0. Both slaves can be selected at the same time by an address which has bit 0=0 (for slave 0) and bit 1 =0 (for salve 1). Thus, both could be addressed with 11000000.

In a more complex system the following could be used to select slaves 1 and 2 while excluding slave 0:

Slave 0 SADDR = 1100 0000
SADEN = 1111 1001
GIVEN = 1100 0xx0

Slave 1 SADDR = 1110 0000
SADEN = 1111 1010
GIVEN = 1110 0x0x

Slave 2 SADDR = 1110 0000
SADEN = 1111 1100
GIVEN = 1110 00xx

In the above example the differentiation among the 3 slaves is in the lower 3 address bits.Slave 0 requires that bit0 = 0 and it can be uniquely addressed by 11100110. Slave 1 requires that bit 1=0 and it can be uniquely addressed by 11100101. Slave 2 requires that bit 2=0 and its unique address is 11100011. To select Salve 0 and 1 and exclude Slave 2, use address 11100100, since it is necessary to make bit2=1 to exclude Slave 2.

The Broadcast Address for each slave is created by taking the logic OR of SADDR and SADEN. Zeros in this result are trended as don't cares. In most cares, interpreting the don't cares as ones, the broadcast address will be FF hexadecimal.

Upon reset SADDR and SADEN are loaded with "0"s. This produces a given address of all "don't cares as well as a Broadcast address of all "don't cares". This effectively disables the Automatic Addressing mode and allows the microcontroller to use traditional 8051-type UART drivers which do not make use of this feature.

STC MCU Limited

The test method of demo program is shown below.

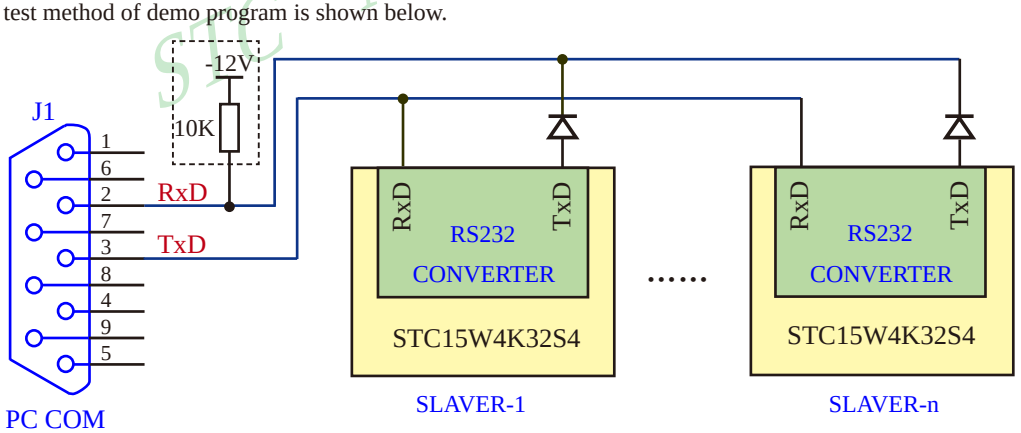

The test method of demo program is shown below.

1, Firstly, connect two MCU to PC COM according to the above figure.

2, Burn the code in which have defined the slave as 0 ("#define SLAVER 0") onto the SLAVER-1 MCU. And burn the code in which have defined the slave as 1 ("#define SLAVER 1") onto the SLAVER-2 MCU

3, Open the COM Helper in PC, set the serial port according to the figure. Note the parity bit.

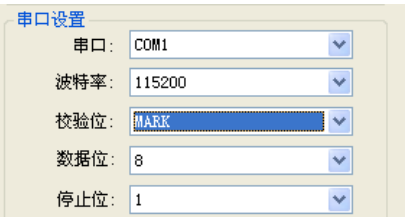

4, If users send the data 0x55 by COM Helper, Salve 1 would be enabled and answer eight 0x78. See the following figure.

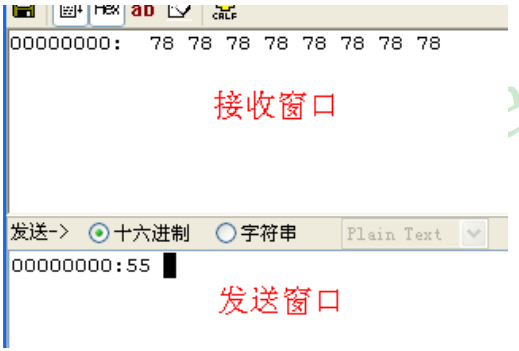

5, If users send the data 0x5a by COM Helper again, Salve 2 would be enabled and answer eight 0x49. See the following figure.

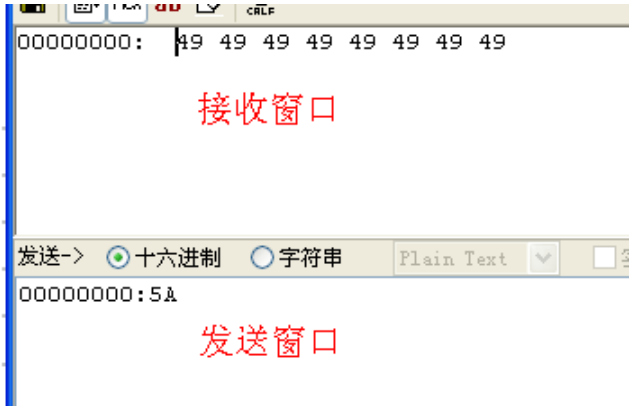

8.7.3 Demo Program of Automatic Address Recognition (C and ASM)

1. C Program Listing

```
/*---------------------------------------------------------------------------------------------------------*/
/* --- STC MCU Limited. ----------------------------------------------------------------------------------*/
/* --- Exam Program of automatic address recognition -----------------------------------------------------*/
/* --- Mobile: (86)13922805190 ---------------------------------------------------------------------------*/
/* --- Fax: 86-755-82905966 ------------------------------------------------------------------------------*/
/* --- Tel: 86-755-82948412 ------------------------------------------------------------------------------*/
/* --- Web: www.STCMCU.com -------------------------------------------------------------------------------*/
/* If you want to use the program or the program referenced in the  ----------------------------*/
/* article, please specify in which data and procedures from STC    ----------------------------*/
/*---- In Keil C development environment, select the Intel 8052 to compiling ------------------*/
/*----  And only contain < reg51.h > as header file ------------------------------------------------*/
/*---------------------------------------------------------------------------------------------------------*/

//suppose the frequency of test chip is 18.432MHz

#include "reg51.h"
#include "intrins.h"

typedef   unsigned   char    BYTE;
typedef   unsigned   int     WORD;

//-----------------------------------------

#define   SLAVER          0          //define the number of slave,   0 is Slave 1 and 1 is Slave 2
#if       SLAVER   ==     0
#define   SAMASK          0x33       //address mask bit of Slave 1

#define   SERADR          0x55       //The address of Slave 1 is xx01,xx01.
#define   ACKTST          0x78
#else
#define   SAMASK          0x3C       //address mask bit of Slave 2
#define   SERADR          0x5A       //The address of Slave 2 is xx01,10xx
#define   ACKTST          0x49
#endif

#define   URMD    0       //0: select T2 as UART1 baud-rate generator
                          //1: select T1 as UART1 baud-rate generator(T1 as 16-bit auto-relaod timer/counter)
                          //2: select T1 as UART1 baud-rate generator (T1 as 8-bit auto-relaod timer/counter)

sfr       T2H     =       0xd6;
sfr       T2L     =       0xd7;
```

STC MCU Limited.

```
sfr     AUXR    =       0x8e;           //Auxiliary register

sfr     SADDR   =       0xA9;           //Slave Address register
sfr     SADEN   =       0xB9;           //Slave Address Mask register

void InitUart();

char count;

void main()
{
        InitUart();                     //Initialize the serial port
        ES = 1;
        EA = 1;
        while (1);
}

/*----------------------------
UART Interrupt Service Routine
----------------------------*/
void Uart() interrupt 4 using 1
{
        if (TI)
        {
                TI = 0;                         //clear TI (transmit flag)
                if (count != 0)
                {
                        count--;
                        SBUF =  ACKTST;
                }
                else
                {
                        SM2  =  1;
                }
        }
        if (RI)
        {
                RI      =       0;              //Clear RI (receive flag)
                SM2     =       0;
                count   =       7;
                SBUF    =       ACKTST;
        }
}
```

STC MCU Limited.

```
/*----------------------------
Initialize the serial port
----------------------------*/
void InitUart()
{
        SADDR  =        SERADR;
        SADEN  =        SAMASK;
        SCON   =        0xf8;           //set UART1 as 9-bit UART with variable baud-rate
                                        //(set TB8 for 1, that easy to communicate with PC directly)
#if     URMD   ==       0
        T2L    =        0xd8;           //Set the proload value of baud-rate
        T2H    =        0xff;           //115200 bps(65536-18432000/4/115200)
        AUXR   =        0x14;           //T2 in 1T mode,  and run T2
        AUXR   |=       0x01;           //select T2 as UART1 baud rate generator
#elif   URMD   ==       1
        AUXR   =        0x40;           //T1 in 1T mode
        TMOD   =        0x00;           //T1 in mode 0 (16-bit auto-reload timer/counter)
        TL1    =        0xd8;           //Set the proload value of baud-rate
        TH1    =        0xff;           //115200 bps(65536-18432000/4/115200)
        TR1    =        1;              //run T1
#else
        TMOD   =        0x20;           //T1 in mode 2 (8-bit auto-reload timer/counter)
        AUXR   =        0x40;           //T1 in 1T mode
        TH1  =  TL1  =  0xfb;           //115200 bps(256 - 18432000/32/115200)
        TR1    =        1;
#endif
}
```

STC MCU Limited.

2. Assembler Listing

```
/*---------------------------------------------------------------------------------------------------*/
/* --- STC MCU  Limited. ---------------------------------------------------------------------------*/
/* --- Exam Program of automatic address recognition -----------------------------------------------*/
/* --- Mobile: (86)13922805190 ---------------------------------------------------------------------*/
/* --- Fax: 86-755-82905966 ------------------------------------------------------------------------*/
/* --- Tel: 86-755-82948412 ------------------------------------------------------------------------*/
/* --- Web: www.STCMCU.com -------------------------------------------------------------------------*/
/* If you want to use the program or the program referenced in the  ----------------------------*/
/* article, please specify in which data and procedures from STC    ----------------------------*/
/*---- In Keil C development environment, select the Intel 8052 to compiling ---------------------*/
/*----  And only contain < reg51.h > as header file ------------------------------------------------*/
/*---------------------------------------------------------------------------------------------------*/

//suppose the frequency of test chip is 18.432MHz

#define   SLAVER          0           //define the number of slave,   0 is Slave 1 and 1 is Slave 2

#if       SLAVER ==       0
#define   SAMASK          0x33        //the address mask bit of Slave 1
#define   SERADR          0x55        //The address of Slave 1 is xx01,xx01
#define   ACKTST          0x78
#else
#define   SAMASK          0x3C        //the address mask bit of Slave 2
#define   SERADR          0x5A        //The address of Slave 2 is xx01,10xx
#define   ACKTST          0x49
#endif

#define   URMD    0       //0: select T2 as UART1 baud-rate generator
                          //1: select T1 as UART1 baud-rate generator(T1 as 16-bit auto-relaod timer/counter)
                          //2: select T1 as UART1 baud-rate generator (T1 as 8-bit auto-relaod timer/counter)

T2H       DATA    0D6H
T2L       DATA    0D7H
AUXR      DATA    08EH            //Auxiliary register

SADDR     DATA    0A9H            //Slave Address register
SADEN     DATA    0B9H            //Slave Address Mask register

COUNT     DATA    20H
//---------------------------------------
          ORG     0000H
          LJMP    MAIN
```

STC MCU Limited.

```
        ORG     0023H
        LJMP    UART_ISR
//----------------------------------------
        ORG     0100H
MAIN:
        MOV     SP,     #3FH
        LCALL   INIT_UART                   //Initialize the serial port
        SETB    ES
        SETB    EA
        SJMP    $

//----------------------------------------
//UART Interrupt Service Routine
UART_ISR:
        PUSH    PSW
        PUSH    ACC
        JNB     TI,     CHK_RX
        CLR     TI                          //clear TI (transmit flag)
        MOV     A,      COUNT
        JZ      RESTART
        DEC     COUNT
        MOV     SBUF,   #ACKTST
        JMP     UREXIT
RESTART:
        SETB    SM2
        JMP     UREXIT
CHK_RX:
        JNB     RI,     UREXIT
        CLR     RI                          //Clear RI (receive flag)
        CLR     SM2
        MOV     SBUF,   #ACKTST
        MOV     COUNT,  #7
UREXIT:
        POP     ACC
        POP     PSW
        RETI
/*---------------------------
Initialize serial port
---------------------------*/
INIT_UART:
        MOV     SADDR,  #SERADR
        MOV     SADEN,  #SAMASK
        MOV     SCON,   #0F8H       //set UART1 as 9-bit UART with variable baud-rate,
                                    //(set TB8 for 1, that easy to communicate with PC directly)
```

STC MCU Limited.

```
#if     URMD    ==      0
        MOV     T2L,    #0D8H           //Set the proload value of baud-rate
                                        //(65536-18432000/4/115200)
        MOV     T2H,    #0FFH
        MOV     AUXR,   #14H            //T2 in 1T mode,  and run T2
        ORL     AUXR,   #01H            //select T2 as UART1 baud rate generator
#elif   URMD    ==      1
        MOV     AUXR,   #40H            //T1 in 1T mode
        MOV     TMOD,   #00H            //T1 in mode 0 (16-bit auto-reload timer/counter)
        MOV     TL1,    #0D8H           //Set the proload value of baud-rate
                                        //(65536-18432000/4/115200)
        MOV     TH1,    #0FFH
        SETB    TR1                     ///run T1
#else
        MOV     TMOD,   #20H            //T1 in mode 2 (8-bit auto-reload timer/counter)
        MOV     AUXR,   #40H            //T1 in 1T mode
        MOV     TL1,    #0FBH           //115200 bps(256 - 18432000/32/115200)
        MOV     TH1,    #0FBH
        SETB    TR1
#endif
        RET

//-----------------------------------------

        END
```

STC MCU Limited.

8.8 Relay Boadcast Mode of UART1

the RxD and TxD of UART1 can be switched in 3 groups of pins: [RxD/P3.0, TxD/P3.1];
[RxD_2/P3.6, TxD_2/P3.7];
[RxD_3/P1.6, TxD_3/P1.7].

Mnemonic	Add	Name	7	6	5	4	3	2	1	0	Reset Value
CLK_DIV (PCON2)	97H	Clock Division register	MCKO_S1	MCKO_S0	ADRJ	Tx_Rx	Tx2_Rx2	CLKS2	CLKS1	CLKS0	0000,x000

Tx_Rx：the set bit of relay and broadcast mode of UART1

0：UART1 works on normal mode

1：UART1 works on relay and broadcast mode，that to say output the input level state of RxD port to the outside TxD pin in real time, namely the external output of TxD pin can reflect the input level state of RxD port.

the RxD and TxD of UART1 can be switched in 3 groups of pins: [RxD/P3.0, TxD/P3.1];
[RxD_2/P3.6, TxD_2/P3.7];
[RxD_3/P1.6, TxD_3/P1.7].

Tx2_Rx2：the set bit of relay and broadcast mode of UART2，the function is reserved temporarily.
the RxD2 and TxD2 of UART2 can be switched in 2 groups of pins: [RxD2/P1.0, TxD2/P1.1];
[RxD2_2/P4.6, TxD2_2/P4.7].

STC MCU Limited.

8.9 Special Function Registers about Serial Port 2 (UART2)

Symbol	Description	Address	Bit Address and Symbol MSB LSB								Value after Power-on or Reset
S2CON	Serial 2 Control register	9AH	S2SM0	-	S2SM2	S2REN	S2TB8	S2RB8	S2TI	S2RI	0000 0000B
S2BUF	Serial 2 Buffer	9BH									xxxx xxxxB
T2H	The high 8-bit of Timer 2 register	D6H									0000 0000B
T2L	The low 8-bit of Timer 2 register	D7H									0000 0000B
AUXR	Auxiliary register	8EH	T0x12	T1x12	UART_M0x6	T2R	T2_C/$\overline{T}$	T2x12	EXTRAM	S1ST2	0000 0001B
IE	Interrupt Enable	A8H	EA	ELVD	EADC	ES	ET1	EX1	ET0	EX0	0000 0000B
IE2	Interrupt Enable 2	AFH	-	-	-	-	-	-	ESPI	ES2	xxxx xx00B
IP2	Interrupt Priority 2 Low	B5H	-	-	-	-	-	-	PSPI	PS2	x000 0000B
P_SW2	Peripheral function switch register	BAH	-	-	-	-	-	S4_S	S3_S	S2_S	xxxx x000B

There are several special function registers which should be understood by users before using the secondary UART.

1. Serial port 2 Control register: S2CON (Non bit-addressable)

SFR name	Address	bit	B7	B6	B5	B4	B3	B2	B1	B0
S2CON	9AH	name	S2SM0	-	S2SM2	S2REN	S2TB8	S2RB8	S2TI	S2RI

S2SM0 : Serial Port 2 Mode Select Bit.

S2SM0	Operation Modes	Description	Baud Rate
0	Mode 0	8-bit UART, baud-rate variable	(T2 overflow rate) / 4
1	Mode 1	9-bit UART, baud-rate variable	(T2 overflow rate) / 4
If AUXR.2/T2x12 = 0, T2 overflow rate = SYSclk / 12/ (65536 - [RL_TH2,RL_TL2]) ; If AUXR.2/T2x12 = 1, T2 overflow rate = SYSclk / (65536 - [RL_TH2,RL_TL2]) . RL_TH2 is the reloaded register of T2H, and RL_TL2 is the reload register of T2L in above formula.			

B6 : Reserved

S2SM2 : Enable the automatic address recognition feature. In mode 1, if S2SM2=1, S2RI will not be set unless the received 9th data bit is 1, indicating an address, and the received byte is a Given or Broadcast address. In mode 0, if S2SM2=1 then S2RI will not be set unless a valid stop bit was received, and the received byte is a Given or Broadcast address.

S2REN : Enable the serial port reception.
When set, enable serial reception.
When clear, disable the secondary serial port reception.

STC MCU Limited

S2TB8 : The 9th data bit which will be transmitted in mode 1.

S2RB8 : In mode 1, the received 9th data bit will go into this bit.

S2TI : Transmit interrupt flag. After a transmitting has been finished, the hardware will set this bit.

S2RI : Receive interrupt flag. After reception has been finished, the hardware will set this bit.

2. Serial port 2 Data Buffer register: S2BUF

SFR name	Address	bit	B7	B6	B5	B4	B3	B2	B1	B0
S2BUF	9BH	name								

It is used as the buffer register in transmission and reception. This SFR accesses two registers; a transmit shift register and a receive latch register. When data is written to S2BUF, it goes to the transmit shift register and is held for serial transmission. Writing a byte to S2BUF initiates the transmission. A read of S2BUF returns the contents of the receive latch.

STC MCU Limited.

3. UART2 only can select T2 as its Baud-Rate Generator ----- T2 register: T2H and T2L

The Timer 2 register T2H (address:D6H) and T2L (address:D7H) are used to laod the time value.

Note: UART2 only can choose Timer 2 as its its baud-rate generator. UART1 prefer to select Timer 2 as its baud-rate generator, also can choose Timer 1 set by software. UART3 and UART4 defaut to selecting Timer 2 as their baud-rate generator. UART3 and UART4 also can choose Timer 3 and Timer 4 as their baud-rate generator respectively.

4. Timer 2 Control Bit ---- T2R, T2_C/$\overline{T}$, T2x12

AUXR: Auxiliary register (Non bit-addressable)

SFR name	Address	bit	B7	B6	B5	B4	B3	B2	B1	B0
AUXR	8EH	name	T0x12	T1x12	UART_M0x6	T2R	T2_C/$\overline{T}$	T2x12	EXTRAM	S1ST2

B4 - T2R：Timer 2 Run control bit

0 : not run Timer 2;

1 : run Timer 2.

B3 - T2_C/$\overline{T}$: Counter or timer 2 selector

0 : as Timer (namely count on internal system clock)

1 : as Counter (namely count on the external pulse input from T2/P3.1)

B2 - T2x12 : Timer 2 clock source bit.

0 : The clock source of Timer 2 is SYSclk/12.

1 : The clock source of Timer 2 is SYSclk/1.

If T2 is used as the baud-rate generator of UART1 or UART2, T1x12 will decide whether UART1 or UART2 is 1T or 12T.

For STC15 series, Secondary UART (S2) only can select Timer 2 as its baud-rate generator. While UART1 not only can Timer 2, but also can select Timer 1 as its baud-rate generator.

5. Registers bits related with UART2 (S2) Interrupt : EA, ES2 and PS2

IE2: Interrupt Enable 2 Rsgister (Non bit-addressable)

SFR name	Address	bit	B7	B6	B5	B4	B3	B2	B1	B0
IE2	AFH	name	-	ET4	ET3	ES4	ES3	ET2	ESPI	ES2

ES2 : Serial port 2 (UART2) interrupt enable bit.
If ES2 = 0, UART2 interrupt would be diabled.
If ES2 = 1, UART2 interrupt would be enabled.

IE: Interrupt Enable Rsgister (Bit-addressable)

SFR name	Address	bit	B7	B6	B5	B4	B3	B2	B1	B0
IE	A8H	name	EA	ELVD	EADC	ES	ET1	EX1	ET0	EX0

EA : disables all interrupts.
If EA = 0,no interrupt will be acknowledged.
If EA = 1, each interrupt source is individually enabled or disabled by setting or clearing its enable bit.

IP2: Interrupt Priority Register (Non bit-addressable)

SFR name	Address	bit	B7	B6	B5	B4	B3	B2	B1	B0
IP2	B5H	name	-	-	-	-	-	-	PSPI	PS2

PS2 : Serial Port 2 (UART2) interrupt priority control bit.
if PS2=0, UART2 interrupt is assigned lowest priority (priority 0).
if PS2=1, UART2 interrupt is assigned highest priority (priority 1).

STC MCU Limited

6. UART2 Switch Control bit: S2_S / P_SW2.0

P_SW2 : Peripheral function switch register (Non bit-addressable)

Mnemonic	Add	Name	7	6	5	4	3	2	1	0	Reset Value
P_SW2	BAH	Peripheral function switch register						S4_S	S3_S	S2_S	xxxx,x000

UART2/S2 can be switched in 2 groups of pins by selecting the control bit S2_S.	
S2_S	UART2/S2 can be switched between P1 and P4
0	UART2/S2 on [P1.0/RxD2,P1.1/TxD2]
1	UART2/S2 on [P4.6/RxD2_2,P4.7/TxD2_2]

UART3/S3 can be switched in 2 groups of pins by selecting the control bit S3_S.	
S3_S	UART3/S3 can be switched between P0 and P5
0	UART3/S3 on [P0.0/RxD3,P0.1/TxD3]
1	UART3/S3 on [P5.0/RxD3_2,P5.1/TxD3_2]

UART4/S4 can be switched in 2 groups of pins by selecting the control bit S4_S.	
S4_S	UART4/S4 can be switched between P0 and P5
0	UART4/S4 on [P0.2/RxD4,P0.3/TxD4]
1	UART4/S4 on [P5.2/RxD4_2,P5.3/TxD4_2]

8.10 UART2 Operation Modes

The serial port 2 (UART2) can be operated in two different modes which are configured by setting S2SM0 in SFR S2CON. Mode 0 and Mode 1 are both asynchronous communication.

8.10.1 Mode 0 : 8-bit UART2 with Variable Baud-Rate

10 bits are transmitted through TxD2/P1.1(TxD2_2/P4.7) or received through RxD2/P1.0(RxD2_2/P4.6). The frame data includes a start bit(0), 8 data bits and a stop bit(1). One receive, the stop bit goes into S2RB8 in SFR – S2CON. The baud rate is determined by the T2 overflow rate.

UART2 only can select T2 as its baud-rate generator. The calculating formula of UART2 buad-rate is shown below :

Baud-Rate of UART2 = (T2 overflow)/4.

If T2 works in 1T mode (AUXR.2/T2x12=1), the T2 overflow = SYSclk / (65536 - [RL_TH2, RL_TL2]) ;

So, Baud-Rate of UART2 = SYSclk / (65536 - [[RL_TH2, RL_TL2]) / 4

If T2 works in 12T mode (AUXR.2/T2x12=0), the T2 overflow = SYSclk / 12 / (65536 - [RL_TH2, RL_TL2]) ;

So, Baud-Rate of UART2 = SYSclk / 12 / (65536 - [[RL_TH2, RL_TL2]) / 4

RL_TH2 is the reloaded register of T2H, and RL_TL2 is the reload register of T2L in above formula.

STC MCU Limited

8.10.2 Mode 3: 9-bit UART2 with Variable Baud-Rate

11 bits are transmitted through TxD2/P1.1(TxD2_2/P4.7) or received through RxD2/P1.0(RxD2_2/P4.6). The frame data includes a start bit(0), 8 data bits, a programmable 9th bit and a stop bit(1). On transmit, the 9th data bit comes from S2TB8 in S2CON. On receive, the 9th data bit goes into S2RB8 in S2CON.The baud rate is determined by the T2 overflow rate.

UART2 only can select T2 as its baud-rate generator. The calculating formula of UART2 buad-rate is shown below :

Baud-Rate of UART2 = (T2 overflow)/4.

If T2 works in 1T mode (AUXR.2/T2x12=1), the T2 overflow = SYSclk / (65536 - [RL_TH2, RL_TL2]) ;

So, Baud-Rate of UART2 = SYSclk / (65536 - [[RL_TH2, RL_TL2]) / 4

If T2 works in 12T mode (AUXR.2/T2x12=0), the T2 overflow = SYSclk / 12 / (65536 - [RL_TH2, RL_TL2]) ;

So, Baud-Rate of UART2 = SYSclk / 12 / (65536 - [[RL_TH2, RL_TL2]) / 4

RL_TH2 is the reloaded register of T2H, and RL_TL2 is the reload register of T2L in above formula.

** When S2_S bit in P_SW2 register is set, the function of UART2 is redirected to P4.6 for RXD2 and P4.7 for TXD2.*

8.11 Demo Program of UART2 (C and ASM)
----- Using Timer 2 as UART2 Baud-Rate Generator

1. C Program Listing

```
/*---------------------------------------------------------------------------------------------------*/
/* --- STC MCU  Limited. ---------------------------------------------------------------------------*/
/* --- Exam Program using Timer 2  as UART2 baud-rate generator ------------------------------------*/
/* --- Mobile: (86)13922805190 ---------------------------------------------------------------------*/
/* --- Fax: 86-755-82905966 ------------------------------------------------------------------------*/
/* --- Tel: 86-755-82948412 ------------------------------------------------------------------------*/
/* --- Web: www.STCMCU.com -------------------------------------------------------------------------*/
/* If you want to use the program or the program referenced in the  ----------------------------*/
/* article, please specify in which data and procedures from STC    ----------------------------*/
/*---- In Keil C development environment, select the Intel 8052 to compiling ---------------------*/
/*----  And only contain < reg51.h > as header file ----------------------------------------------*/
/*---------------------------------------------------------------------------------------------------*/

//suppose the frequency of test chip is 18.432MHz

#include "reg51.h"
#include "intrins.h"

typedef unsigned char    BYTE;
typedef unsigned int     WORD;

#define   FOSC    18432000L                 //System frequency
#define   BAUD    115200                    //UART2 baud-rate
#define   TM      (65536 - (FOSC/4/BAUD))

#define   NONE_PARITY     0                 //none parity
#define   ODD_PARITY      1                 //odd parity
#define   EVEN_PARITY     2                 //even parity
#define   MARK_PARITY     3                 //mark parity
#define   SPACE_PARITY    4                 //space parity

#define PARITYBIT EVEN_PARITY               //define the parity bit

sfr       AUXR    =       0x8e;             //Auxiliary register
sfr       S2CON   =       0x9a;             //UART2 Control register
sfr       S2BUF   =       0x9b;             //UART2 data register
sfr       T2H     =       0xd6;
sfr       T2L     =       0xd7;
sfr       IE2     =       0xaf;             //Interrupt Enable register 2
```

STC MCU Limited.

```
#define   S2RI    0x01                //S2CON.0
#define   S2TI    0x02                //S2CON.1

#define   S2RB8   0x04                //S2CON.2
#define   S2TB8   0x08                //S2CON.3

bit       busy;

void SendData(BYTE dat);
void SendString(char *s);

void main()
{
#if (PARITYBIT == NONE_PARITY)
    S2CON = 0x50;                     //8-bit variable baud-rate
#elif (PARITYBIT == ODD_PARITY) || (PARITYBIT == EVEN_PARITY) || (PARITYBIT == MARK_PARITY)
    S2CON = 0xda;                     //9-bit variable baud-rate
                                      //the parity bit is initialized for 1
#elif (PARITYBIT == SPACE_PARITY)
    S2CON = 0xd2;                     //9-bit variable baud-rate
                                      //the parity bit is initialized for 0
#endif

    T2L = TM;                         //Set the preload value
    T2H = TM>>8;
    AUXR = 0x14;                      //T2 in 1T mode,  and run T2
    IE2 = 0x01;                       //enable UART2 interrupt
    EA = 1;

    SendString("STC15W4K32S4\r\nUart2 Test !\r\n");
    while(1);
}

/*----------------------------
UART2 Interrupt Service Routine
----------------------------*/
void Uart2() interrupt 8 using 1
{
    if (S2CON & S2RI)
    {
        S2CON &= ~S2RI;               //clear S2RI
        P0 = S2BUF;                   //serial data is shown in P0
        P2 = (S2CON & S2RB8);          //P2.2 display the parity bit
    }
```

STC MCU Limited.

```
	if (S2CON & S2TI)
	{
		S2CON &= ~S2TI;			//clear S2TI
		busy = 0;			//clear busy flag
	}
}

/*----------------------------
Send UART data
----------------------------*/
void SendData(BYTE dat)
{
	while (busy);				//wait to finish sending the previous data
	ACC = dat;				//access to the parity bit ---- P (PSW.0)
	if (P)
	{
	#if (PARITYBIT == ODD_PARITY)
		S2CON &= ~S2TB8;		//the parity bit is set for 0
	#elif (PARITYBIT == EVEN_PARITY)
		S2CON |= S2TB8;			//the parity bit is set for 1
	#endif
	}
	else
	{
	#if (PARITYBIT == ODD_PARITY)
		S2CON |= S2TB8;			//the parity bit is set for 1
	#elif (PARITYBIT == EVEN_PARITY)
		S2CON &= ~S2TB8;		//the parity bit is set for 0
	#endif
	}
	busy = 1;
	S2BUF = ACC;
}

/*----------------------------
Send sting
----------------------------*/
void SendString(char *s)
{
	while (*s)
	{
		SendData(*s++);
	}
}
```

STC MCU Limited.

2. Assembler Listing

```
/*---------------------------------------------------------------------------------------------------------*/
/* --- STC MCU  Limited. ---------------------------------------------------------------------------------*/
/* --- Exam Program using Timer 2  as UART2 baud-rate generator ------------------------------*/
/* --- Mobile: (86)13922805190 ---------------------------------------------------------------------------*/
/* --- Fax: 86-755-82905966 ------------------------------------------------------------------------------*/
/* --- Tel: 86-755-82948412 ------------------------------------------------------------------------------*/
/* --- Web: www.STCMCU.com -------------------------------------------------------------------------------*/
/* If you want to use the program or the program referenced in the  ------------------------------*/
/* article, please specify in which data and procedures from STC    ------------------------------*/
/*---- In Keil C development environment, select the Intel 8052 to compiling ----------*/
/*----  And only contain < reg51.h > as header file ------------------------------------------------*/
/*---------------------------------------------------------------------------------------------------------*/

//suppose the frequency of test chip is 18.432MHz
#define   NONE_PARITY       0     //none parity
#define   ODD_PARITY        1     //odd parity
#define   EVEN_PARITY       2     //even parity
#define   MARK_PARITY       3     //mark parity
#define   SPACE_PARITY      4     //space parity

#define   PARITYBIT EVEN_PARITY   //define the parity bit

//---------------------------------------

AUXR    EQU     08EH              //Auxiliary register
S2CON   EQU     09AH              //UART2 Control register
S2BUF   EQU     09BH              //UART2 data register
T2H     DATA    0D6H
T2L     DATA    0D7H
IE2     EQU     0AFH              //Interrupt Enable register 2

S2RI    EQU     01H               //S2CON.0
S2TI    EQU     02H               //S2CON.1
S2RB8   EQU     04H               //S2CON.2
S2TB8   EQU     08H               //S2CON.3
//---------------------------------------
BUSY    BIT     20H.0
//---------------------------------------
        ORG     0000H
        LJMP    MAIN

        ORG     0043H
        LJMP    UART2_ISR
```

STC MCU Limited.

```
//-----------------------------------------
        ORG     0100H
MAIN:
        CLR     BUSY
        CLR     EA
        MOV     SP,     #3FH
#if (PARITYBIT == NONE_PARITY)
        MOV     S2CON,  #50H                    //8-bit variable baud-rate
#elif (PARITYBIT == ODD_PARITY) || (PARITYBIT == EVEN_PARITY) || (PARITYBIT == MARK_PARITY)
        MOV     S2CON,  #0DAH                   //9-bit variable baud-rate
                                                //the parity bit is initialized for 1
#elif (PARITYBIT == SPACE_PARITY)
        MOV     S2CON,  #0D2H                   //9-bit variable baud-rate
                                                //the parity bit is initialized for 0
#endif

//---------------------------------
        MOV     T2L,    #0D8H                   //Set the preload value (65536-18432000/4/115200)
        MOV     T2H,    #0FFH
        MOV     AUXR,   #14H                    //T2 in 1T mode,  and run T2
        ORL     IE2,    #01H                    //enable UART2 interrupt
        SETB    EA

        MOV     DPTR,   #TESTSTR
        LCALL   SENDSTRING

        SJMP    $
;------------------------------------------
TESTSTR:
        DB  "STC15W4K32S4 Uart2 Test !",0DH,0AH,0

;/*---------------------------
;UART2 Interrupt Service Routine
;---------------------------*/
UART2_ISR:
        PUSH    ACC
        PUSH    PSW
        MOV     A,      S2CON                   ;read the content of S2CON
        JNB     ACC.0,  CHECKTI
        ANL     S2CON,  #NOT S2RI               ;clear S2RI
         MOV    P0,     S2BUF                   ;serial data is shown in P0
        ANL     A,      #S2RB8                  ;
        MOV      P2,    A                       ;P2.2 display the parity bit
CHECKTI:                        ;
        MOV     A,      S2CON                   ;read the content of S2CON
        JNB     ACC.1,  ISR_EXIT
        ANL     S2CON,  #NOT S2TI               ;clear S2RI
        CLR     BUSY                            ;clear busy flag
```

STC MCU Limited.

```
ISR_EXIT:
        POP     PSW
        POP     ACC
        RETI

;/*----------------------------
;Send UART data
;----------------------------*/
SENDDATA:
        JB      BUSY,   $                       //wait to finish sending the previous data
        MOV     ACC,    A                       //access to the parity bit ---- P (PSW.0)
        JNB     P,      EVEN1INACC
ODD1INACC:
#if (PARITYBIT == ODD_PARITY)
        ANL     S2CON,  #NOT S2TB8              //the parity bit is set for 0
#elif (PARITYBIT == EVEN_PARITY)
        ORL     S2CON,  #S2TB8                  //the parity bit is set for 1
#endif
        SJMP    PARITYBITOK
EVEN1INACC:
#if (PARITYBIT == ODD_PARITY)
        ORL     S2CON,  #S2TB8                  //the parity bit is set for 1
#elif (PARITYBIT == EVEN_PARITY)
        ANL     S2CON,  #NOT S2TB8              //the parity bit is set for 0
#endif
PARITYBITOK:
        SETB    BUSY
        MOV     S2BUF,  A
        RET

;/*----------------------------
;Send sting
//----------------------------*/
SENDSTRING:
        CLR     A
        MOVC    A,      @A+DPTR
        JZ      STRINGEND
        INC     DPTR
        LCALL   SENDDATA
        SJMP    SENDSTRING
STRINGEND:
        RET
//-----------------------------------------
        END
```

STC MCU Limited.

8.12 Special Function Registers about Serial Port 3 (UART3)

Symbol	Description	Address	Bit Address and Symbol MSB LSB	Value after Power-on or Reset
S3CON	Serial 3 Control register	ACH	S3SM0 | S3ST3 | S3SM2 | S3REN | S3TB8 | S3RB8 | S3TI | S3RI	0000 0000B
S3BUF	Serial 3 Buffer	ADH		xxxx xxxxB
T2H	The high 8-bit of Timer 2 register	D6H		0000 0000B
T2L	The low 8-bit of Timer 2 register	D7H		0000 0000B
AUXR	Auxiliary register	8EH	T0x12 | T1x12 | UART_M0x6 | T2R | T2_C/$\overline{T}$ | T2x12 | EXTRAM | S1ST2	0000 0001B
T3H	The high 8-bit of Timer 3 register	D4H		0000 0000B
T3L	The low 8-bit of Timer 3 register	D5H		0000 0000B
T4T3M	T4 and T3 Mode control register	D1H	T4R | T4_C/$\overline{T}$ | T4x12 | T4CLKO | T3R | T3_C/$\overline{T}$ | T3x12 | T3CLKO	0000 0000B
IE2	Interrupt Enable 2	AFH	- | ET4 | ET3 | ES4 | ES3 | ET2 | ESPI | ES2	x000 0000B
P_SW2	Peripheral function switch register	BAH	- | - | - | - | - | S4_S | S3_S | S2_S	xxxx x000B

STC MCU Limited.

There are several special function registers which should be understood by users before using the UART3.

1. Serial port 3 Control register: S3CON (Non bit-addressable)

SFR name	Address	bit	B7	B6	B5	B4	B3	B2	B1	B0
S3CON	ACH	name	S3SM0	S3ST3	S3SM2	S3REN	S3TB8	S3RB8	S3TI	S3RI

S3SM0 : Serial Port 3 Mode Select Bit.

S3SM0	Operation Modes	Description	Baud Rate
0	Mode 0	8-bit UART, baud-rate variable	(T2 overflow rate) / 4 or (T3 overflow rate) / 4
1	Mode 1	9-bit UART, baud-rate variable	(T2 overflow rate) / 4 or (T3 overflow rate) / 4

If AUXR.2/T2x12 = 0, T2 overflow rate = SYSclk / 12/ (65536 - [RL_TH2,RL_TL2]) ;
If AUXR.2/T2x12 = 1, T2 overflow rate = SYSclk / (65536 - [RL_TH2,RL_TL2]) .
RL_TH2 is the reloaded register of T2H, and RL_TL2 is the reload register of T2L in above formula.

If T4T3M.1/T3x12 = 0, T3 overflow rate = SYSclk / 12/ (65536 - [RL_TH3,RL_TL3]) ;
If T4T3M.1/T3x12 = 1, T3 overflow rate = SYSclk / (65536 - [RL_TH3,RL_TL3]) .
RL_TH3 is the reloaded register of T3H, and RL_TL3 is the reload register of T3L in above formula.

S3ST3 : the control bit that UART3 select Timer 3 as its baud-rate generator.
0 : Select Timer 2 as the baud-rate generator of UART3
1 : Select Timer 3 as the baud-rate generator of UART3.

S3SM2 : Enable the automatic address recognition feature. In mode 1, if S3SM2=1, S3RI will not be set unless the received 9th data bit is 1, indicating an address, and the received byte is a Given or Broadcast address. In mode 0, if S3SM2=1 then S3RI will not be set unless a valid stop bit was received, and the received byte is a Given or Broadcast address.

S3REN : Enable the serial port reception.
When set, enable serial reception.
When clear, disable the secondary serial port reception.

S3TB8 : The 9th data bit which will be transmitted in mode 1.

S3RB8 : In mode 1, the received 9th data bit will go into this bit.

S3TI : Transmit interrupt flag. After a transmitting has been finished, the hardware will set this bit.

S3RI : Receive interrupt flag. After reception has been finished, the hardware will set this bit.

2. Serial port 3 Data Buffer register: S3BUF

SFR name	Address	bit	B7	B6	B5	B4	B3	B2	B1	B0
S3BUF	ADH	name								

It is used as the buffer register in transmission and reception. This SFR accesses two registers; a transmit shift register and a receive latch register. When data is written to S3BUF, it goes to the transmit shift register and is held for serial transmission. Writing a byte to S3BUF initiates the transmission. A read of S3BUF returns the contents of the receive latch.

STC MCU Limited.

3. UART3 either can select Timer 2 or Timer 3 as its Baud-Rate Generator ----- T2 register: T2H, T2L and T3 register: T3H, T3L

The Timer 2 register T2H (address:D6H) and T2L (address:D7H) are used to laod the time value.
The Timer 3 register T3H (address:D4H) and T3L (address:D5H) are used to laod the time value.

Note: UART2 only can choose Timer 2 as its its baud-rate generator. UART1 prefer to select Timer 2 as its baud-rate generator, also can choose Timer 1 set by software. UART3 and UART4 defaut to selecting Timer 2 as their baud-rate generator. UART3 and UART4 also can choose Timer 3 and Timer 4 as their baud-rate generator respectively.

4. Timer 2 Control Bit ---- T2R, T2_C/$\overline{T}$, T2x12

AUXR: Auxiliary register (Non bit-addressable)

SFR name	Address	bit	B7	B6	B5	B4	B3	B2	B1	B0
AUXR	8EH	name	T0x12	T1x12	UART_M0x6	T2R	T2_C/$\overline{T}$	T2x12	EXTRAM	S1ST2

B4 - T2R：Timer 2 Run control bit
0 : not run Timer 2;
1 : run Timer 2.

B3 - T2_C/$\overline{T}$: Counter or timer 2 selector
0 : as Timer (namely count on internal system clock)
1 : as Counter (namely count on the external pulse input from T2/P3.1)

B2 - T2x12 : Timer 2 clock source bit.
0 : The clock source of Timer 2 is SYSclk/12.
1 : The clock source of Timer 2 is SYSclk/1.
If T2 is used as the baud-rate generator of UART1 or UART2, T1x12 will decide whether UART1 or UART2 is 1T or 12T.

For STC15 series, Secondary UART (S2) only can select Timer 2 as its baud-rate generator. While UART3 not only can Timer 2, but also can select Timer 3 as its baud-rate generator.

5. Timer 3 Control Bit ---- T3R, T3_C/$\overline{T}$, T3x12

T4T3M: T4 and T3 mode control bit (Non bit-addressable)

SFR name	Address	bit	B7	B6	B5	B4	B3	B2	B1	B0
T4T3M	D1H	name	T4R	T4_C/$\overline{T}$	T4x12	T4CLKO	T3R	T3_C/$\overline{T}$	T3x12	T3CLKO

B3 - T3R: Timer 3 Run control bit
0 : not run Timer 3;
1 : run Timer 3.

B2 - T3_C/$\overline{T}$: Counter or timer 3 selector
0 : as Timer (namely count on internal system clock)
1 : as Counter (namely count on the external pulse input from T3/P0.5)

B1 - T3x12 : Timer 3 clock source bit.
0 : The clock source of Timer 3 is SYSclk/12.
1 : The clock source of Timer 3 is SYSclk/1.

If T3 is used as the baud-rate generator of UART3, T3x12 will decide whether UART3 is 1T or 12T.

6. Registers bits related with UART3 (S3) Interrupt : EA, ES3

IE2: Interrupt Enable 2 Rsgister (Non bit-addressable)

SFR name	Address	bit	B7	B6	B5	B4	B3	B2	B1	B0
IE2	AFH	name	-	ET4	ET3	ES4	ES3	ET2	ESPI	ES2

ES3 : Serial port 3 (UART3) interrupt enable bit.
If ES3 = 0, UART3 interrupt would be diabled.
If ES3 = 1, UART3 interrupt would be enabled.

IE: Interrupt Enable Rsgister (Bit-addressable)

SFR name	Address	bit	B7	B6	B5	B4	B3	B2	B1	B0
IE	A8H	name	EA	ELVD	EADC	ES	ET1	EX1	ET0	EX0

EA : disables all interrupts.
If EA = 0,no interrupt will be acknowledged.
If EA = 1, each interrupt source is individually enabled or disabled by setting or clearing its enable bit.

STC MCU Limited.

7. UART3 Switch Control bit: S3_S / P_SW2.1

P_SW2 : Peripheral function switch register (Non bit-addressable)

Mnemonic	Add	Name	7	6	5	4	3	2	1	0	Reset Value
P_SW2	BAH	Peripheral function switch register						S4_S	S3_S	S2_S	xxxx,x000

UART3/S3 can be switched in 2 groups of pins by selecting the control bit S3_S.	
S3_S	UART3/S3 can be switched between P0 and P5
0	UART3/S3 on [P0.0/RxD3,P0.1/TxD3]
1	UART3/S3 on [P5.0/RxD3_2,P5.1/TxD3_2]

UART2/S2 can be switched in 2 groups of pins by selecting the control bit S2_S.	
S2_S	UART2/S2 can be switched between P1 and P4
0	UART2/S2 on [P1.0/RxD2,P1.1/TxD2]
1	UART2/S2 on [P4.6/RxD2_2,P4.7/TxD2_2]

UART4/S4 can be switched in 2 groups of pins by selecting the control bit S4_S.	
S4_S	UART4/S4 can be switched between P0 and P5
0	UART4/S4 on [P0.2/RxD4,P0.3/TxD4]
1	UART4/S4 on [P5.2/RxD4_2,P5.3/TxD4_2]

STC MCU Limited.

8.13 UART3 Operation Modes

The serial port 3 (UART3) can be operated in two different modes which are configured by setting S3SM0 in SFR S3CON. Mode 0 and Mode 1 are both asynchronous communication.

8.13.1 Mode 0 : 8-bit UART3 with Variable Baud-Rate

10 bits are transmitted through TxD3/P0.1(TxD3/P5.1) or received through RxD3/P0.0(RxD3/P5.0). The frame data includes a start bit(0), 8 data bits and a stop bit(1). One receive, the stop bit goes into S3RB8 in SFR – S3CON. The baud rate is determined by the T2 overflow rate or T3 overflow rate.

UART3 either can select T2 or T3 as its baud-rate generator. When UART3 select T2 as its baud-rate generator (that is to say S3ST3 / S3SCON.0 = 0), the calculating formula of UART3 buad-rate is shown below :

Baud-Rate of UART3 = (T2 overflow)/4.

If T2 works in 1T mode (AUXR.2/T2x12=1), the T2 overflow = SYSclk / (65536 - [RL_TH2, RL_TL2]) ;

So, Baud-Rate of UART3 = SYSclk / (65536 - [[RL_TH2, RL_TL2]) / 4

If T2 works in 12T mode (AUXR.2/T2x12=0), the T2 overflow = SYSclk / 12 / (65536 - [RL_TH2, RL_TL2]) ;

So, Baud-Rate of UART3 = SYSclk / 12 / (65536 - [[RL_TH2, RL_TL2]) / 4

RL_TH2 is the reloaded register of T2H, and RL_TL2 is the reload register of T2L in above formula.

When UART3 select T3 as its baud-rate generator (that is to say S3ST3 / S3SCON.0 = 1), the calculating formula of UART3 buad-rate is shown below :

Baud-Rate of UART3 = (T3 overflow)/4.

If T3 works in 1T mode (T4T3M.1/T3x12=1), the T3 overflow = SYSclk / (65536 - [RL_TH3, RL_TL3]) ;

So, Baud-Rate of UART3 = SYSclk / (65536 - [[RL_TH3, RL_TL3]) / 4

If T3 works in 12T mode (T4T3M.1/T3x12=0), the T3 overflow = SYSclk / 12 / (65536 - [RL_TH3, RL_TL3]) ;

So, Baud-Rate of UART3 = SYSclk / 12 / (65536 - [[RL_TH3, RL_TL3]) / 4

RL_TH3 is the reloaded register of T3H, and RL_TL3 is the reload register of T3L in above formula.

STC MCU Limited

8.13.2 Mode 3: 9-bit UART3 with Variable Baud-Rate

11 bits are transmitted through TxD3/P0.1(TxD3/P5.1) or received through RxD3/P0.0(RxD3/P5.0). The frame data includes a start bit(0), 8 data bits, a programmable 9th bit and a stop bit(1). On transmit, the 9th data bit comes from S3TB8 in S3CON. On receive, the 9th data bit goes into S3RB8 in S3CON. The baud rate is determined by the T2 overflow rate or T3 overflow rate.

UART3 either can select T2 or T3 as its baud-rate generator. When UART3 select T2 as its baud-rate generator (that is to say S3ST3 / S3SCON.0 = 0), the calculating formula of UART3 buad-rate is shown below :

Baud-Rate of UART3 = (T2 overflow)/4.

If T2 works in 1T mode (AUXR.2/T2x12=1), the T2 overflow = SYSclk / (65536 - [RL_TH2, RL_TL2]) ;

So, Baud-Rate of UART3 = SYSclk / (65536 - [[RL_TH2, RL_TL2]) / 4

If T2 works in 12T mode (AUXR.2/T2x12=0), the T2 overflow = SYSclk / 12 / (65536 - [RL_TH2, RL_TL2]) ;

So, Baud-Rate of UART3 = SYSclk / 12 / (65536 - [[RL_TH2, RL_TL2]) / 4

RL_TH2 is the reloaded register of **T2H, and RL_TL2** is the reload register of T2L in above formula.

When UART3 select T3 as its baud-rate generator (that is to say S3ST3 / S3SCON.0 = 1), the calculating formula of UART3 buad-rate is shown below :

Baud-Rate of UART3 = (T3 overflow)/4.

If T3 works in 1T mode (T4T3M.1/T3x12=1), the T3 overflow = SYSclk / (65536 - [RL_TH3, RL_TL3]) ;

So, Baud-Rate of UART3 = SYSclk / (65536 - [[RL_TH3, RL_TL3]) / 4

If T3 works in 12T mode (T4T3M.1/T3x12=0), the T3 overflow = SYSclk / 12 / (65536 - [RL_TH3, RL_TL3]) ;

So, Baud-Rate of UART3 = SYSclk / 12 / (65536 - [[RL_TH3, RL_TL3]) / 4

RL_TH3 is the reloaded register of **T3H, and RL_TL3** is the reload register of T3L in above formula.

** When S3_S bit in P_SW2 register is set, the function of UART3 is redirected to P4.6 for RXD3 and P4.7 for TXD3.*

STC MCU Limited.

8.14 Special Function Registers about Serial Port 4 (UART4)

Symbol	Description	Address	Bit Address and Symbol MSB LSB	Value after Power-on or Reset
S4CON	Serial 4 Control register	84H	S4SM0 | S4ST4 | S4SM2 | S4REN | S4TB8 | S4RB8 | S4TI | S4RI	0000 0000B
S4BUF	Serial 4 Buffer	85H		xxxx xxxxB
T2H	The high 8-bit of Timer 2 register	D6H		0000 0000B
T2L	The low 8-bit of Timer 2 register	D7H		0000 0000B
AUXR	Auxiliary register	8EH	T0x12 | T1x12 | UART_M0x6 | T2R | T2_C/$\overline{T}$ | T2x12 | EXTRAM | S1ST2	0000 0001B
T4H	The high 8-bit of Timer 4 register	D2H		0000 0000B
T4L	The low 8-bit of Timer 4 register	D3H		0000 0000B
T4T3M	T4 and T3 Mode control register	D1H	T4R | T4_C/$\overline{T}$ | T4x12 | T4CLKO | T3R | T3_C/$\overline{T}$ | T3x12 | T3CLKO	0000 0000B
IE2	Interrupt Enable 2	AFH	- | - | - | ET4 | ET3 | ES4 | ES3 | ET2 | ESPI | ES2	x000 0000B
P_SW2	Peripheral function switch register	BAH	- | - | - | - | - | S4_S | S3_S | S2_S	xxxx x000B

STC MCU Limited.

There are several special function registers which should be understood by users before using the UART4.

1. Serial port 4 Control register: S4CON (Non bit-addressable)

SFR name	Address	bit	B7	B6	B5	B4	B3	B2	B1	B0
S4CON	84H	name	S4SM0	S4ST4	S4SM2	S4REN	S4TB8	S4RB8	S4TI	S4RI

S4SM0 : Serial Port 4 Mode Select Bit.

S4SM0	Operation Modes	Description	Baud Rate
0	Mode 0	8-bit UART, baud-rate variable	(T2 overflow rate) / 4 or (T4 overflow rate) / 4
1	Mode 1	9-bit UART, baud-rate variable	(T2 overflow rate) / 4 or (T4 overflow rate) / 4

If AUXR.2/T2x12 = 0, T2 overflow rate = SYSclk / 12/ (65536 - [RL_TH2,RL_TL2]) ;
If AUXR.2/T2x12 = 1, T2 overflow rate = SYSclk / (65536 - [RL_TH2,RL_TL2]) .
RL_TH2 is the reloaded register of T2H, and RL_TL2 is the reload register of T2L in above formula.

If T4T3M.5/T4x12 = 0, T4 overflow rate = SYSclk / 12/ (65536 - [RL_TH4, RL_TL4]) ;
If T4T3M.5/T4x12 = 1, T4 overflow rate = SYSclk / (65536 - [RL_TH4, RL_TL4]) .
RL_TH4 is the reloaded register of T4H, and RL_TL4 is the reload register of T4L in above formula.

S4ST4 : the control bit that UART4 select Timer 4 as its baud-rate generator.
0 : Select Timer 2 as the baud-rate generator of UART4
1 : Select Timer 4 as the baud-rate generator of UART4.

S4SM2 : Enable the automatic address recognition feature. In mode 1, if S4SM2=1, S4RI will not be set unless the received 9th data bit is 1, indicating an address, and the received byte is a Given or Broadcast address. In mode 0, if S4SM2=1 then S4RI will not be set unless a valid stop bit was received, and the received byte is a Given or Broadcast address.

S4REN : Enable the serial port reception.
When set, enable serial reception.
When clear, disable the secondary serial port reception.

S4TB8 : The 9th data bit which will be transmitted in mode 1.

S4RB8 : In mode 1, the received 9th data bit will go into this bit.

S4TI : Transmit interrupt flag. After a transmitting has been finished, the hardware will set this bit.

S4RI : Receive interrupt flag. After reception has been finished, the hardware will set this bit.

2. Serial port 4 Data Buffer register: S4BUF

SFR name	Address	bit	B7	B6	B5	B4	B3	B2	B1	B0
S4BUF	85H	name								

It is used as the buffer register in transmission and reception. This SFR accesses two registers; a transmit shift register and a receive latch register. When data is written to S4BUF, it goes to the transmit shift register and is held for serial transmission. Writing a byte to S4BUF initiates the transmission. A read of S4BUF returns the contents of the receive latch.

STC MCU Limited.

3. UART4 either can select Timer 2 or Timer 4 as its Baud-Rate Generator ----- T2 register: T2H, T2L and T4 register: T4H, T4L

The Timer 2 register T2H (address:D6H) and T2L (address:D7H) are used to laod the time value.
The Timer 4 register T4H (address:D2H) and T4L (address:D3H) are used to laod the time value.

Note: UART2 only can choose Timer 2 as its its baud-rate generator. UART1 prefer to select Timer 2 as its baud-rate generator, also can choose Timer 1 set by software. UART3 and UART4 defaut to selecting Timer 2 as their baud-rate generator. UART3 and UART4 also can choose Timer 3 and Timer 4 as their baud-rate generator respectively.

4. Timer 2 Control Bit ---- T2R, T2_C/$\overline{T}$, T2x12

AUXR: Auxiliary register (Non bit-addressable)

SFR name	Address	bit	B7	B6	B5	B4	B3	B2	B1	B0
AUXR	8EH	name	T0x12	T1x12	UART_M0x6	T2R	T2_C/$\overline{T}$	T2x12	EXTRAM	S1ST2

B4 - T2R：Timer 2 Run control bit
0 : not run Timer 2;
1 : run Timer 2.

B3 - T2_C/$\overline{T}$: Counter or timer 2 selector
0 : as Timer (namely count on internal system clock)
1 : as Counter (namely count on the external pulse input from T2/P3.1)

B2 - T2x12 : Timer 2 clock source bit.
0 : The clock source of Timer 2 is SYSclk/12.
1 : The clock source of Timer 2 is SYSclk/1.
If T2 is used as the baud-rate generator of UART1 or UART2, T1x12 will decide whether UART1 or UART2 is 1T or 12T.

For STC15 series, Secondary UART (S2) only can select Timer 2 as its baud-rate generator. While UART3 not only can Timer 2, but also can select Timer 3 as its baud-rate generator.

5. Timer 4 Control Bit ---- T4R, T4_C/$\overline{T}$, T4x12

T4T3M: T4 and T3 mode control bit (Non bit-addressable)

SFR name	Address	bit	B7	B6	B5	B4	B3	B2	B1	B0
T4T3M	D1H	name	T4R	T4_C/$\overline{T}$	T4x12	T4CLKO	T3R	T3_C/$\overline{T}$	T3x12	T3CLKO

B7 - T4R：Timer 4 Run control bit
0 : not run Timer 4;
1 : run Timer 4.

B6 - T4_C/$\overline{T}$: Counter or timer 4 selector
0 : as Timer (namely count on internal system clock)
1 : as Counter (namely count on the external pulse input from T4/P0.7)

B5 - T4x12 : Timer 4 clock source bit.
0 : The clock source of Timer 4 is SYSclk/12.
1 : The clock source of Timer 4 is SYSclk/1.

If T4 is used as the baud-rate generator of UART4, T4x12 will decide whether UART4 is 1T or 12T.

6. Registers bits related with UART4 (S4) Interrupt : EA, ES4

IE2: Interrupt Enable 2 Rsgister (Non bit-addressable)

SFR name	Address	bit	B7	B6	B5	B4	B3	B2	B1	B0
IE2	AFH	name	-	ET4	ET3	ES4	ES3	ET2	ESPI	ES2

ES4 : Serial port 4 (UART4) interrupt enable bit.
If ES4 = 0, UART4 interrupt would be diabled.
If ES4 = 1, UART4 interrupt would be enabled.

IE: Interrupt Enable Rsgister (Bit-addressable)

SFR name	Address	bit	B7	B6	B5	B4	B3	B2	B1	B0
IE	A8H	name	EA	ELVD	EADC	ES	ET1	EX1	ET0	EX0

EA : disables all interrupts.
If EA = 0,no interrupt will be acknowledged.
If EA = 1, each interrupt source is individually enabled or disabled by setting or clearing its enable bit.

STC MCU Limited.

7. UART3 Switch Control bit: S3_S / P_SW2.1

P_SW2 : Peripheral function switch register (Non bit-addressable)

Mnemonic	Add	Name	7	6	5	4	3	2	1	0	Reset Value
P_SW2	BAH	Peripheral function switch register						S4_S	S3_S	S2_S	xxxx,x000

UART4/S4 can be switched in 2 groups of pins by selecting the control bit S4_S.	
S4_S	UART4/S4 can be switched between P0 and P5
0	UART4/S4 on [P0.2/RxD4,P0.3/TxD4]
1	UART4/S4 on [P5.2/RxD4_2,P5.3/TxD4_2]

UART3/S3 can be switched in 2 groups of pins by selecting the control bit S3_S.	
S3_S	UART3/S3 can be switched between P0 and P5
0	UART3/S3 on [P0.0/RxD3,P0.1/TxD3]
1	UART3/S3 on [P5.0/RxD3_2,P5.1/TxD3_2]

UART2/S2 can be switched in 2 groups of pins by selecting the control bit S2_S.	
S2_S	UART2/S2 can be switched between P1 and P4
0	UART2/S2 on [P1.0/RxD2,P1.1/TxD2]
1	UART2/S2 on [P4.6/RxD2_2,P4.7/TxD2_2]

STC MCU Limited.

8.15 UART4 Operation Modes

The serial port 4 (UART4) can be operated in two different modes which are configured by setting S4SM0 in SFR S4CON. Mode 0 and Mode 1 are both asynchronous communication.

8.15.1 Mode 0 : 8-bit UART4 with Variable Baud-Rate

10 bits are transmitted through TxD4/P0.3(TxD4_2/P5.3) or received through RxD4/P0.2(RxD4_2/P5.2). The frame data includes a start bit(0), 8 data bits and a stop bit(1). One receive, the stop bit goes into S4RB8 in SFR – S4CON. The baud rate is determined by the T2 overflow rate or T3 overflow rate.

UART4 either can select T2 or T4 as its baud-rate generator. When UART4 select T2 as its baud-rate generator (that is to say S4ST4 / S4SCON.1 = 0), the calculating formula of UART4 buad-rate is shown below :

Baud-Rate of UART4 = (T2 overflow)/4.

If T2 works in 1T mode (AUXR.2/T2x12=1), the T2 overflow = SYSclk / (65536 - [RL_TH2, RL_TL2]) ;

So, Baud-Rate of UART4 = SYSclk / (65536 - [[RL_TH2, RL_TL2]) / 4

If T2 works in 12T mode (AUXR.2/T2x12=0), the T2 overflow = SYSclk / 12 / (65536 - [RL_TH2, RL_TL2]) ;

So, Baud-Rate of UART4 = SYSclk / 12 / (65536 - [[RL_TH2, RL_TL2]) / 4

RL_TH2 is the reloaded register of T2H, and RL_TL2 is the reload register of T2L in above formula.

When UART4 select T4 as its baud-rate generator (that is to say S4ST4 / S4SCON.1 = 1), the calculating formula of UART4 buad-rate is shown below :

Baud-Rate of UART4 = (T4 overflow)/4.

If T4 works in 1T mode (T4T3M.5/T4x12=1), the T4 overflow = SYSclk / (65536 - [RL_TH4, RL_TL4]) ;

So, Baud-Rate of UART4 = SYSclk / (65536 - [[RL_TH4, RL_TL4]) / 4

If T4 works in 12T mode (T4T3M.5/T4x12=0), the T4 overflow = SYSclk / 12 / (65536 - [RL_TH4, RL_TL4]) ;

So, Baud-Rate of UART4 = SYSclk / 12 / (65536 - [[RL_TH4, RL_TL4]) / 4

RL_TH4 is the reloaded register of T4H, and RL_TL4 is the reload register of T4L in above formula.

STC MCU Limited

8.15.2 Mode 3: 9-bit UART4 with Variable Baud-Rate

11 bits are transmitted through TxD4/P0.3(TxD4_2/P5.3) or received through RxD4/P0.2(RxD4_2/P5.2). The frame data includes a start bit(0), 8 data bits, a programmable 9th bit and a stop bit(1). On transmit, the 9th data bit comes from S4TB8 in S4CON. On receive, the 9th data bit goes into S4RB8 in S4CON. The baud rate is determined by the T2 overflow rate or T3 overflow rate.

UART4 either can select T2 or T4 as its baud-rate generator. When UART4 select T2 as its baud-rate generator (that is to say S4ST4 / S4SCON.1 = 0), the calculating formula of UART4 buad-rate is shown below :

Baud-Rate of UART4 = (T2 overflow)/4.

If T2 works in 1T mode (AUXR.2/T2x12=1), the T2 overflow = SYSclk / (65536 - [RL_TH2, RL_TL2]) ;

So, Baud-Rate of UART4 = SYSclk / (65536 - [[RL_TH2, RL_TL2]) / 4

If T2 works in 12T mode (AUXR.2/T2x12=0), the T2 overflow = SYSclk / 12 / (65536 - [RL_TH2, RL_TL2]) ;

So, Baud-Rate of UART4 = SYSclk / 12 / (65536 - [[RL_TH2, RL_TL2]) / 4

RL_TH2 is the reloaded register of **T2H, and RL_TL2** is the reload register of T2L in above formula.

When UART4 select T4 as its baud-rate generator (that is to say S4ST4 / S4SCON.1 = 1), the calculating formula of UART4 buad-rate is shown below :

Baud-Rate of UART4 = (T4 overflow)/4.

If T4 works in 1T mode (T4T3M.5/T4x12=1), the T4 overflow = SYSclk / (65536 - [RL_TH4, RL_TL4]) ;

So, Baud-Rate of UART4 = SYSclk / (65536 - [[RL_TH4, RL_TL4]) / 4

If T4 works in 12T mode (T4T3M.5/T4x12=0), the T4 overflow = SYSclk / 12 / (65536 - [RL_TH4, RL_TL4]) ;

So, Baud-Rate of UART4 = SYSclk / 12 / (65536 - [[RL_TH4, RL_TL4]) / 4

RL_TH4 is the reloaded register of **T4H, and RL_TL4** is the reload register of T4L in above formula.

** When S4_S bit in P_SW2 register is set, the function of UART4 is redirected to P5.2 for RXD4 and P5.3 for TXD4.*

STC MCU Limited.

Chapter 9 IAP/EEPROM Function of STC15 Series

STC15 series MCU have integrated a large capacity of internal EEPROM which is separated from program space. Internal EEPROM, which could be repeatedly erased more than 100 thousand times, can be used as Data Flash by ISP/IAP technology.

The In-System Programmable (ISP) in STC15 series makes it possible to update the user's application program and non-volatile application data (in IAP-memory) without removing the MCU chip from the actual end product. This useful capability makes a wide range of field-update applications possible. (Note ISP needs the loader program pre-programmed in the ISP-memory.) In general, the user needn't know how ISP operates because STC has provided the standard ISP tool and embedded ISP code in STC shipped samples. But, to develop a good program for ISP function, the user has to understand the architecture of the embedded flash.

The embedded EEPROM consists of several pages. Each page contains 512 bytes. Dealing with flash, the user must erase it in page unit before writing (programming) data into it. Erasing flash means setting the content of that flash as FFh. Two erase modes are available in this chip. One is mass mode and the other is page mode. The mass mode gets more performance, but it erases the entire flash. The page mode is something performance less, but it is flexible since it erases flash in page unit. Unlike RAM's real-time operation, to erase flash or to write (program) flash often takes long time so to wait finish.

Furthermore, it is a quite complex timing procedure to erase/program flash. Fortunately, the STC15Fseries carried with convenient mechanism to help the user read/change the flash content. Just filling the target address and data into several SFR, and triggering the built-in ISP automation, the user can easily erase, read, and program the embedded flash.

The In-Application Program feature is designed for user to Read/Write nonvolatile data flash. It may bring great help to store parameters those should be independent of power-up and power-done action. In other words, the user can store data in data flash memory, and after he shutting down the MCU and rebooting the MCU, he can get the original value, which he had stored in.

The user can program the data flash according to the same way as ISP program, so he should get deeper understanding related to SFR IAP_DATA, IAP_ADDRL, IAP_ADDRH, IAP_CMD, IAP_TRIG, and IAP_CONTR.

STC MCU Limited

9.1 IAP / EEPROM Special Function Registers

The following special function registers are related to the IAP/ISP/EEPROM operation. All these registers can be accessed by software in the user's application program.

Symbol	Description	Address	Bit Address and Symbol MSB LSB								Value after Power-on or Reset
IAP_DATA	ISP/IAP Flash Data Register	C2H									1111 1111B
IAP_ADDRH	ISP/IAP Flash Address High	C3H									0000 0000B
IAP_ADDRL	ISP/IAP Flash Address Low	C4H									0000 0000B
IAP_CMD	ISP/IAP Flash Command Register	C5H	-	-	-	-	-	-	MS1	MS0	xxxx x000B
IAP_TRIG	ISP/IAP Flash Command Trigger	C6H									xxxx xxxxB
IAP_CONTR	ISP/IAP Control Register	C7H	IAPEN	SWBS	SWRST	CMD_FAIL	-	WT2	WT1	WT0	0000 x000B
PCON	Power Control	87H	SMOD	SMOD0	LVDF	POF	GF1	GF0	PD	IDL	0011 0000B

1. ISP/IAP Flash Data Register : IAP_DATA (Address: C2H, Non bit-addressable)

IAP_DATA is the data port register for ISP/IAP operation. The data in IAP_DATA will be written into the desired address in operating ISP/IAP write and it is the data window of readout in operating ISP/IAP read.

2. ISP/IAP Flash Address Registers : IAP_ADDRH and IAP_ADDRL

IAP_ADDRH is the high-byte address port for all ISP/IAP modes.

IAP_ADDRH[7:5] must be cleared to 000, if one bit of IAP_ADDRH[7:5] is set, the IAP/ISP write function must fail.

IAP_ADDRL is the low port for all ISP/IAP modes. In page erase operation, it is ignored.

3. ISP/IAP Flash Command Register : IAP_CMD (Non bit -addressable)

SFR name	Address	bit	B7	B6	B5	B4	B3	B2	B1	B0
IAP_CMD	C5H	name	-	-	-	-	-	-	MS1	MS0

B7~B2: Reserved.

MS1, MS0 : ISP/IAP operating mode selection. IAP_CMD is used to select the flash mode for performing numerous ISP/IAP function or used to access protected SFRs.

0, 0 : Standby
0, 1 : Data Flash/EEPROM read.
1, 0 : Data Flash/EEPROM program.
1, 1 : Data Flash/EEPROM page erase.

Except IAP15 series MCU, STC15 series only can data flash/EEPROM byte-read / byte-program / page erase. The user program can directly modify the user program area in the user program area for IAP15 series.

Special Statement : EEPROM also can be read by instruction MOVC (which is used to read program memory), but whose start address is the next of end address in program memory instead of 0000H.

STC MCU Limited.

4. ISP/IAP Flash Command Trigger Register : IAP_TRIG (Address: C6H, Non bit -addressable)

IAP_TRIG is the command port for triggering ISP/IAP activity and protected SFRs access. If IAP_TRIG is filled with sequential 0x5Ah, 0xA5h and if IAPEN(IAP_CONTR.7) = 1, ISP/IAP activity or protected SFRs access will triggered.

5. ISP/IAP Control Register : IAP_CONTR (Non bit-addressable)

SFR name	Address	bit	B7	B6	B5	B4	B3	B2	B1	B0
IAP_CONTR	C7H	name	IAPEN	SWBS	SWRST	CMD_FAIL	-	WT2	WT2	WT0

IAPEN : ISP/IAP operation enable.

0 : Global disable all ISP/IAP program/erase/read function.

1 : Enable ISP/IAP program/erase/read function.

SWBS: software boot selection control bit

0 : Boot from main-memory after reset.

1 : Boot from ISP memory after reset.

SWRST: software reset trigger control.

0 : No operation

1 : Generate software system reset. It will be cleared by hardware automatically.

CMD_FAIL: Command Fail indication for ISP/IAP operation.

0 : The last ISP/IAP command has finished successfully.

1 : The last ISP/IAP command fails. It could be caused since the access of flash memory was inhibited.

B3: Reserved. Software must write “0” on this bit when IAP_CONTR is written.

```
;Software reset from user appliction program area (AP area) and switch to AP area to run program
MOV IAP_CONTR, #00100000B ;SWBS = 0(Select AP area), SWRST = 1(Software reset)
;Software reset from system ISP monitor program area (ISP area) and switch to AP area to run program
MOV IAP_CONTR, #00100000B ;SWBS = 0(Select AP area), SWRST = 1(Software reset)
;Software reset from user appliction program area (AP area) and switch to ISP area to run program
MOV IAP_CONTR, #01100000B ;SWBS = 1(Select ISP area), SWRST = 1(Software reset)
;Software reset from system ISP monitor program area (ISP area) and switch to ISP area to run program
MOV IAP_CONTR, #01100000B ;SWBS = 1(Select ISP area), SWRST = 1(Software reset)
```

This reset is to reset the whole system, all special function registers and I/O prots will be reset to the initial value

STC MCU Limited

WT2~WT0 : Waiting time selection while flash is busy.

Setting wait times			CPU wait times			
WT2	WT1	WT0	Read (2 System clocks)	Program (=55uS)	Sector Erase (=21mS)	Recommended System Clock Frequency (MHz)
1	1	1	2 SYSclks	55 SYSclks	21012 SYSclks	≤1MHz
1	1	0	2 SYSclks	110 SYSclks	42024 SYSclks	≤ 2MHz
1	0	1	2 SYSclks	165 SYSclks	63036 SYSclks	≤ 3MHz
1	0	0	2 SYSclks	330 SYSclks	126072 SYSclks	≤ 6MHz
0	1	1	2 SYSclks	660 SYSclks	252144 SYSclks	≤ 12MHz
0	1	0	2 SYSclks	1100 SYSclks	420240 SYSclks	≤ 20MHz
0	0	1	2 SYSclks	1320 SYSclks	504288 SYSclks	≤ 24MHz
0	0	0	2 SYSclks	1760 SYSclks	672384 SYSclks	≤ 30MHz

Note: Software reset actions could reset other SFR, but it never influences bits IAPEN and SWBS. The IAPEN and SWBS. The IAPEN and SWBS only will be reset by power-up action, while not software reset.

6. When the operation voltage is too low, EEPROM / IAP function should be disabled

PCON register (Power Control Register)

SFR name	Address	bit	B7	B6	B5	B4	B3	B2	B1	B0
PCON	87H	name	SMOD	SMOD0	LVDF	POF	GF1	GF0	PD	IDL

LVDF : Pin Low-Voltage Flag. Once low voltage condition is detected (VCC power is lower than LVD voltage), it is set by hardware (and should be cleared by software).

STC MCU Limited.

The detection voltage of 5V MCU of STC15 series is optional:

-40℃	25℃	85℃
4.74	4.64	4.60
4.41	4.32	4.27
4.14	4.05	4.00
3.90	3.82	3.77
3.69	3.61	3.56
3.51	3.43	3.38
3.36	3.28	3.23
3.21	3.14	3.09

The detection voltage of 3V MCU of STC15 series is optional:

-40℃	25℃	85℃
3.11	3.08	3.09
2.85	2.82	2.83
2.63	2.61	2.61
2.44	2.42	2.43
2.29	2.26	2.26
2.14	2.12	2.12
2.01	2.00	2.00
1.90	1.89	1.89

Don't enable EEPROM/IAP function when the operation voltage is too low. Namely, enable the option "Inhibit EEPROM operation under Low-Voltage" in STC-ISP Writer/Programmer.

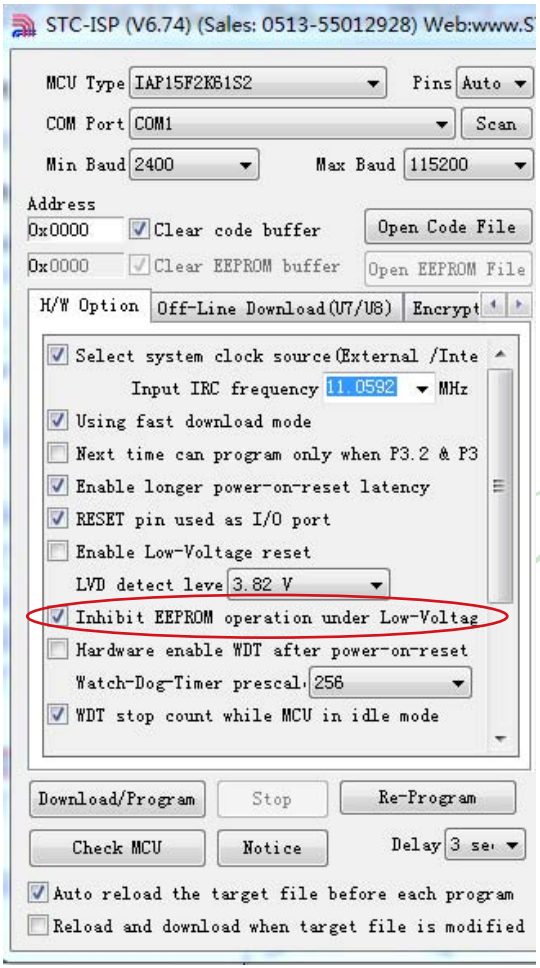

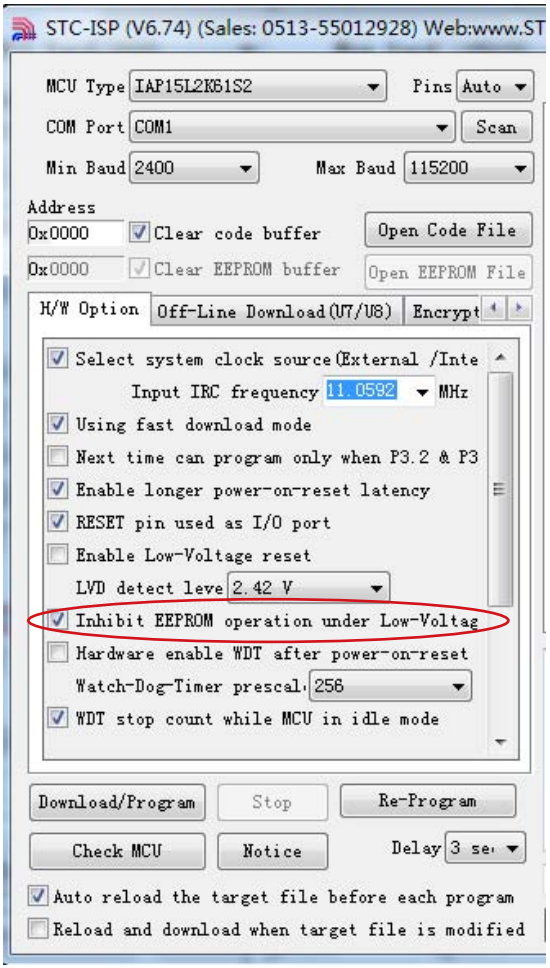

9.2 STC15 Series Internal EEPROM Allocation Table

STC15 series microcontroller's Data Flash (internal available EEPROM) address (and program space is separate) : if the application area of IAP write Data/erase sector of the action, the statements will be ignore and continue to the next one. Program in user application area (AP area), only operate IAP/ISP on Data Flash (EEPROM)

9.2.1 STC15W4K32S4 Series Internal EEPROM Allocation Table

STC15W4K32S4 series MCU internal EEPROM Selection Table							For STC15W4K32S4 series MCU, EEPROM also can be read by instruction MOVC (which is used to read program memory), but whose start address is the next of end address in program memory instead of 0000H. Each sector 512 byte
Type	**EEPROM (Byte)**	**Sector Numbers**	If read by IAP byte, **EPROM Begin_Sector Begin_Address**	If read by IAP byte, **EPROM End_Sector End_Address**	If read by MOVC instruction, **EPROM Begin_Sector Begin_Address**	If read by MOVC instruction, **EPROM End_Sector End_Address**	
STC15W4K16S4	42K	84	0000h	A7FFh	4000h	E7FFh	
STC15W4K32S4	26K	52	0000h	67FFh	8000h	E7FFh	
STC15W4K40S4	18K	36	0000h	47FFh	A000h	E7FFh	
STC15W4K48S4	10K	20	0000h	27FFh	C000h	E7FFh	
STC15W4K56S4	2K	4	0000h	07FFh	E000h	E7FFh	
The following series are special. User can directly modify the application program in the application area, all flash area could be used as EEPROM							
IAP15W4K58S4	–	116	0000h	E7FFh			No particular EEPROM, But the user program can directly modify the user program area in the user program area.
IAP15W4K61S4	–	122	0000h	F3FFh			No particular EEPROM, But the user program can directly modify the user program area in the user program area.
IRC15W4K63S4	–	127	0000h	FDFFh			No particular EEPROM, But the user program can directly modify the user program area in the user program area.

STC MCU Limited.

9.2.2 STC15F2K60S2 Series Internal EEPROM Allocation Table

STC15F2K60S2 series MCU internal EEPROM Selection Table STC15L2K60S2 series MCU internal EEPROM Selection Table							
Type	**EEPROM (Byte)**	**Sector Numbers**	If read by IAP byte, **EPROM Begin_Sector Begin_Address**	If read by IAP byte, **EPROM End_Sector End_Address**	If read by MOVC instruction, **EPROM Begin_Sector Begin_Address**	If read by MOVC instruction, **EPROM End_Sector End_Address**	
STC15F2K08S2 STC15L2K08S2	53K	106	0000h	D3FFh	2000h	F3FFh	
STC15F2K16S2 STC15L2K16S2	45K	90	0000h	B3FFh	4000h	F3FFh	For STC15F2K60S2 series MCU, EEPROM also can be read by instruction MOVC (which is used to read program memory), but whose start address is the next of end address in program memory instead of 0000H.
STC15F2K24S2 STC15L2K24S2	37K	74	0000h	93FFh	6000h	F3FFh	
STC15F2K32S2 STC15L2K32S2	29K	58	0000h	73FFh	8000h	F3FFh	
STC15F2K40S2 STC15L2K40S2	21K	42	0000h	53FFh	A000h	F3FFh	
STC15F2K48S2 STC15L2K48S2	13K	26	0000h	33FFh	C000h	F3FFh	
STC15F2K56S2 STC15L2K56S2	5K	10	0000h	13FFh	E000h	F3FFh	
STC15F2K60S2 STC15L2K60S2	1K	2	0000h	03FFh	F000h	F3FFh	Each sector 512 byte
STC15F2K32S STC15L2K32S	29K	58	0000h	73FFh	8000h	F3FFh	
STC15F2K60S STC15L2K60S	1K	2	0000h	03FFh	F000h	F3FFh	
STC15F2K24AS STC15L2K24AS	37K	74	0000h	93FFh	6000h	F3FFh	
STC15F2K48AS STC15L2K48AS	13K	26	0000h	33FFh	C000h	F3FFh	
The following series are special. User can directly modify the application program in the application area, all flash area could be used as EEPROM							
IAP15F2K61S2 IAP15L2K61S2	–	122	0000h	F3FFh			No particular EEPROM, But the user program can directly modify the user program area in the user program area.
IRC15F2K63S2	–	126	0000h	FBFFh			No particular EEPROM, But the user program can directly modify the user program area in the user program area.
IAP15F2K61S IAP15L2K61S	–	122	0000h	F3FFh			No particular EEPROM, But the user program can directly modify the user program area in the user program area.

STC MCU Limited.

9.2.3 STC15W1K16S Series Internal EEPROM Allocation Table

STC15W1K16S series MCU internal EEPROM Selection Table							For STC15W1K16S series MCU, EEPROM also can not be read by instruction MOVC (which is used to read program memory).
Type	**EEPROM (Byte)**	**Sector Numbers**	If read by IAP byte, **EPROM Begin_Sector Begin_Address**	If read by IAP byte, **EPROM End_Sector End_Address**	If read by MOVC instruction, **EPROM Begin_Sector Begin_Address**	If read by MOVC instruction, **EPROM End_Sector End_Address**	
STC15W1K16S	13K	26	0000h	33FFh			Each sector 512 byte
STC15W1K24S	5K	10	0000h	13FFh			
The following series are special. User can directly modify the application program in the application area, all flash area could be used as EEPROM							
IAP15W1K29S	–	58	0000h	73FFh			No particular EEPROM, But the user program can directly modify the user program area in the user program area.
IRC15W1K31S	–	63	0000h	7DFFh			

STC MCU Limited.

9.2.4 STC15W404S Series Internal EEPROM Allocation Table

STC15W404S series MCU internal EEPROM Selection Table							For STC15W404S series MCU, EEPROM also can not be read by instruction MOVC (which is used to read program memory).
Type	**EEPROM (Byte)**	**Sector Numbers**	If read by IAP byte, **EPROM Begin_Sector Begin_Address**	If read by IAP byte, **EPROM End_Sector End_Address**	If read by MOVC instruction, **EPROM Begin_Sector Begin_Address**	If read by MOVC instruction, **EPROM End_Sector End_Address**	
STC15W404S	9K	18	0000h	23FFh			Each sector 512 byte
STC15W408S	5K	10	0000h	13FFh			
STC15W410S	3K	6	0000h	0BFFh			
The following series are special. User can directly modify the application program in the application area, all flash area could be used as EEPROM							
IAP15W413S	–	26	0000h	33FFh			No particular EEPROM, But the user program can directly modify the user program area in the user program area.
IRC15W415S	–	31	0000h	3DFFh			

9.2.4 STC15W401AS Series Internal EEPROM Allocation Table

STC15W401AS series MCU internal EEPROM Selection Table							For STC15W401AS series MCU, EEPROM also can be read by instruction MOVC (which is used to read program memory), but whose start address is the next of end address in program memory instead of 0000H. Each sector 512 byte
Type	**EEPROM (Byte)**	**Sector Numbers**	If read by IAP byte, **EPROM Begin_Sector Begin_Address**	If read by IAP byte, **EPROM End_Sector End_Address**	If read by MOVC instruction, **EPROM Begin_Sector Begin_Address**	If read by MOVC instruction, **EPROM End_Sector End_Address**	
STC15W401AS	5K	10	0000h	13FFh	400h	17FFh	
STC15W402AS	5K	10	0000h	13FFh	800h	1BFFh	
STC15W404AS	9K	18	0000h	23FFh	1000h	33FFh	
STC15W408AS	5K	10	0000h	13FFh	2000h	33FFh	
STC15W410AS	3K	6	0000h	0BFFh	2800h	33FFh	
STC15W412AS	1K	2	0000h	03FFh	3000h	33FFh	
The following series are special. User can directly modify the application program in the application area, all flash area could be used as EEPROM							
IAP15W413AS	–	26	0000h	33FFh			No particular EEPROM, But the user program can directly modify the user program area in the user program area.
IRC15W415AS	–	31	0000h	3DFFh			

STC MCU Limited.

9.2.5 STC15F408AD Series Internal EEPROM Allocation Table

STC15F408AD series MCU internal EEPROM Selection Table STC15L408AD series MCU internal EEPROM Selection Table							For STC15F408AD series MCU, EEPROM also can be read by instruction MOVC (which is used to read program memory), but whose start address is the next of end address in program memory instead of 0000H. Each sector 512 byte
Type	**EEPROM (Byte)**	**Sector Numbers**	If read by IAP byte, **EPROM Begin_Sector Begin_Address**	If read by IAP byte, **EPROM End_Sector End_Address**	If read by MOVC instruction, **EPROM Begin_Sector Begin_Address**	If read by MOVC instruction, **EPROM End_Sector End_Address**	
STC15F408AD STC15L408AD	5K	10	0000h	13FFh	2000h	33FFh	
The following series are special. User can directly modify the application program in the application area, all flash area could be used as EEPROM							
IAP15F413AD IAP15L413AD	–	26	0000h	33FFh			No particular EEPROM, But the user program can directly modify the user program area in the user program area.

9.2.6 STC15W201S Series Internal EEPROM Allocation Table

STC15W201S series MCU internal EEPROM Selection Table							For STC15W201S series MCU, EEPROM also can not be read by instruction MOVC (which is used to read program memory). Each sector 512 byte
Type	**EEPROM (Byte)**	**Sector Numbers**	If read by IAP byte, **EPROM Begin_Sector Begin_Address**	If read by IAP byte, **EPROM End_Sector End_Address**	If read by MOVC instruction, **EPROM Begin_Sector Begin_Address**	If read by MOVC instruction, **EPROM End_Sector End_Address**	
STC15W201S	4K	8	0000h	0FFFh			
STC15W202S	3K	6	0000h	0BFFh			
STC15W203S	2K	4	0000h	07FFh			
STC15W204S	1K	2	0000h	03FFh			
The following series are special. User can directly modify the application program in the application area, all flash area could be used as EEPROM							
IAP15W205S	–	10	0000h	13FFh			No particular EEPROM, But the user program can directly modify the user program area in the user program area.
IRC15W207S	–	15	0000h	1DFFh			

STC MCU Limited

9.2.7 STC15W10x Series Internal EEPROM Allocation Table

STC15W10x series MCU internal EEPROM Selection Table							For STC15W10x series MCU, EEPROM also can be read by instruction MOVC (which is used to read program memory), but whose start address is the next of end address in program memory instead of 0000H. Each sector 512 byte
Type	**EEPROM (Byte)**	**Sector Numbers**	If read by IAP byte, **EPROM Begin_Sector Begin_Address**	If read by IAP byte, **EPROM End_Sector End_Address**	If read by MOVC instruction, **EPROM Begin_Sector Begin_Address**	If read by MOVC instruction, **EPROM End_Sector End_Address**	
STC15W101	4K	8	0000h	0FFFh	0400h	13FFh	
STC15W102	3K	6	0000h	0BFFh	0800h	13FFh	
STC15W103	2K	4	0000h	07FFh	0C00h	13FFh	
STC15W104	1K	2	0000h	03FFh	1000h	13FFh	
The following series are special. User can directly modify the application program in the application area, all flash area could be used as EEPROM							
IAP15W105	-	10	0000h	13FFh			No particular EEPROM, But the user program can directly modify the user program area in the user program area.
IRC15W107	–	14	0000h	1BFFh			

9.2.8 STC15F101W Series Internal EEPROM Allocation Table

STC15F101W series MCU internal EEPROM Selection Table STC15L101W series MCU internal EEPROM Selection Table							For STC15F101W series MCU, EEPROM also can be read by instruction MOVC (which is used to read program memory), but whose start address is the next of end address in program memory instead of 0000H. Each sector 512 byte
Type	**EEPROM (Byte)**	**Sector Numbers**	If read by IAP byte, **EPROM Begin_Sector Begin_Address**	If read by IAP byte, **EPROM End_Sector End_Address**	If read by MOVC instruction, **EPROM Begin_Sector Begin_Address**	If read by MOVC instruction, **EPROM End_Sector End_Address**	
STC15F101W STC15L101W	4K	8	0000h	0FFFh	0400h	13FFh	
STC15F102W STC15L102W	3K	6	0000h	0BFFh	0800h	13FFh	
STC15F103W STC15L103W	2K	4	0000h	07FFh	0C00h	13FFh	
STC15F104W STC15L104W	1K	2	0000h	03FFh	1000h	13FFh	
The following series are special. User can directly modify the application program in the application area, all flash area could be used as EEPROM							
IAP15F105W IAP15L105W	–	10	0000h	13FFh			No particular EEPROM, But the user program can directly modify the user program area in the user program area.
IRC15F107W	–	14	0000h	1BFFh			No particular EEPROM, But the user program can directly modify the user program area in the user program area.

STC MCU Limited.

STC15 series MCU address reference table in detail (512 bytes per sector)								
Sector 1		Sector 2		Sector 3		Sector 4		
Start	End	Start	End	Start	End	Start	End	
0000H	01FFH	0200H	03FFH	0400H	05FFH	0600H	07FFH	
Sector 5		Sector 6		Sector7		Sector 8		
Start	End	Start	End	Start	End	Start	End	
0800H	09FFH	0A00H	0BFFH	0C00H	0DFFH	0E00H	0FFFH	
Sector 9		Sector 10		Sector 11		Sector 12		
Start	End	Start	End	Start	End	Start	End	
1000H	11FFH	1200H	13FFH	1400H	15FFH	1600H	17FFH	
Sector 13		Sector 14		Sector 15		Sector 16		
Start	End	Start	End	Start	End	Start	End	
1800H	19FFH	1A00H	1BFFH	1C000H	1DFFH	1E00H	1FFFH	
Sector 17		Sector 18		Sector 19		Sector 20		
Start	End	Start	End	Start	End	Start	End	
2000H	21FFH	2200H	23FFH	2400H	25FFH	2600H	27FFH	
Sector 21		Sector 22		Sector 23		Sector 24		
Start	End	Start	End	Start	End	Start	End	
2800H	29FFH	2A00H	2BFFH	2C00H	2DFFH	2E00H	2FFFH	
Sector 25		Sector 26		Sector 27		Sector 28		Each sector 512 byte
Start	End	Start	End	Start	End	Start	End	
3000H	31FFH	3200H	33FFH	3400H	35FFH	3600H	37FFH	
Sector 29		Sector 30		Sector 31		Sector 32		
Start	End	Start	End	Start	End	Start	End	
3800H	39FFH	3A00H	3BFFH	3C000H	3DFFH	3E00H	3FFFH	Suggest the same times modified data in the same sector, each times modified data in different sectors, don't have to use full, of course, it was all to use
Sector 33		Sector 34		Sector 35		Sector 36		
Start	End	Start	End	Start	End	Start	End	
4000H	41FFH	4200H	43FFH	4400H	45FFH	4600H	47FFH	
Sector 37		Sector 38		Sector 39		Sector 40		
Start	End	Start	End	Start	End	Start	End	
4800H	49FFH	4A00H	4BFFH	4C00H	4DFFH	4E00H	4FFFH	
Sector 41		Sector 42		Sector 43		Sector 44		
Start	End	Start	End	Start	End	Start	End	
5000H	51FFH	5200H	53FFH	5400H	55FFH	5600H	57FFH	
Sector 45		Sector 46		Sector 47		Sector 48		
Start	End	Start	End	Start	End	Start	End	
5800H	59FFH	5A00H	5BFFH	5C00H	5DFFH	5E00H	5FFFH	
Sector 49		Sector 50		Sector 51		Sector 52		
Start	End	Start	End	Start	End	Start	End	
6000H	61FFH	6200H	63FFH	6400H	65FFH	6600H	67FFH	
Sector 53		Sector 54		Sector 55		Sector 56		
Start	End	Start	End	Start	End	Start	End	
6800H	69FFH	6A00H	6BFFH	6C00H	6DFFH	6E00H	6FFFH	
Sector 57		Sector 58		Sector 59		Sector 60		
Start	End	Start	End	Start	End	Start	End	
7000H	71FFH	7200H	73FFH	7400H	75FFH	7600H	77FFH	
Sector 61		Sector 62		Sector 63		Sector 64		
Start	End	Start	End	Start	End	Start	End	
7800h	79FFh	7A00h	7BFFh	7C00h	7DFFh	7E00h	7FFFh	

STC MCU Limited.

STC15 series MCU address reference table in detail (512 bytes per sector)								
Sector 65		Sector 66		Sector 67		Sector 68		
Start	End	Start	End	Start	End	Start	End	
8000H	81FFH	8200H	83FFH	8400H	85FFH	8600H	87FFH	
Sector 69		Sector 70		Sector 71		Sector 72		
Start	End	Start	End	Start	End	Start	End	
8800H	89FFH	8A00H	8BFFH	8C00H	8DFFH	8E00H	8FFFH	
Sector 73		Sector 74		Sector 75		Sector 76		
Start	End	Start	End	Start	End	Start	End	
9000H	91FFH	9200H	93FFH	9400H	95FFH	9600H	97FFH	
Sector 77		Sector 78		Sector 79		Sector 80		
Start	End	Start	End	Start	End	Start	End	
9800H	99FFH	9A00H	9BFFH	9C000H	9DFFH	9E00H	9FFFH	
Sector 81		Sector 82		Sector 83		Sector 84		
Start	End	Start	End	Start	End	Start	End	
A000H	A1FFH	A200H	A3FFH	A400H	A5FFH	A600H	A7FFH	
Sector 85		Sector 86		Sector 87		Sector 88		
Start	End	Start	End	Start	End	Start	End	
A800H	A9FFH	AA00H	ABFFH	AC00H	ADFFH	AE00H	AFFFH	Each sector 512 byte
Sector 89		Sector 90		Sector 91		Sector 92		
Start	End	Start	End	Start	End	Start	End	
B000H	B1FFH	B200H	B3FFH	B400H	B5FFH	B600H	B7FFH	
Sector 93		Sector 94		Sector 95		Sector 96		Suggest the same times modified data in the same sector, each times modified data in different sectors, don't have to use full, of course, it was all to use
Start	End	Start	End	Start	End	Start	End	
B800H	B9FFH	BA00H	BBFFH	BC000H	BDFFH	BE00H	BFFFH	
Sector 97		Sector 98		Sector 99		Sector 100		
Start	End	Start	End	Start	End	Start	End	
C000H	C1FFH	C200H	C3FFH	C400H	C5FFH	C600H	C7FFH	
Sector 101		Sector 102		Sector 103		Sector 104		
Start	End	Start	End	Start	End	Start	End	
C800H	C9FFH	CA00H	CBFFH	CC00H	CDFFH	CE00H	CFFFH	
Sector 105		Sector 106		Sector 107		Sector 108		
Start	End	Start	End	Start	End	Start	End	
D000H	D1FFH	D200H	D3FFH	D400H	D5FFH	D600H	D7FFH	
Sector 109		Sector 110		Sector 111		Sector 112		
Start	End	Start	End	Start	End	Start	End	
D800H	D9FFH	DA00H	DBFFH	DC00H	DDFFH	DE00H	DFFFH	
Sector 113		Sector 114		Sector 115		Sector 116		
Start	End	Start	End	Start	End	Start	End	
E000H	E1FFH	E200H	E3FFH	E400H	E5FFH	E600H	E7FFH	
Sector 117		Sector 118		Sector 119		Sector 120		
Start	End	Start	End	Start	End	Start	End	
E800H	E9FFH	EA00H	EBFFH	EC00H	EDFFH	EE00H	EFFFH	
Sector 121		Sector 122						
Start	End	Start	End					
F000H	F1FFH	F200H	F3FFH					

STC MCU Limited.

9.3 IAP/EEPROM Assembly Program Introduction

```
; /*It is decided by the assembler/compiler used by users that whether the SFRs addresses are declared by the
DATA or the EQU directive*/
    IAP_DATA    DATA    0C2H    or    IAP_DATA    EQU    0C2H
    IAP_ADDRH   DATA    0C3H    or    IAP_ADDRH   EQU    0C3H
    IAP_ADDRL   DATA    0C4H    or    IAP_ADDRL   EQU    0C4H
    IAP_CMD     DATA    0C5H    or    IAP_CMD     EQU    0C5H
    IAP_TRIG    DATA    0C6H    or    IAP_TRIG    EQU    0C6H
    IAP_CONTR   DATA    0C7H    or    IAP_CONTR   EQU    0C7H

;/*Define ISP/IAP/EEPROM command and wait time*/
    ISP_IAP_BYTE_READ           EQU    1    ;Byte-Read
    ISP_IAP_BYTE_PROGRAM        EQU    2    ;Byte-Program
    ISP_IAP_SECTOR_ERASE        EQU    3    ;Sector-Erase
    WAIT_TIME                   EQU    0    ;Set wait time

;/*Byte-Read*/
    MOV    IAP_ADDRH,    #BYTE_ADDR_HIGH      ;Set ISP/IAP/EEPROM address high
    MOV    IAP_ADDRL,    #BYTE_ADDR_LOW       ;Set ISP/IAP/EEPROM address low
    MOV    IAP_CONTR,    #WAIT_TIME           ;Set wait time
    ORL    IAP_CONTR,    #10000000B           ;Open ISP/IAP function
    MOV    IAP_CMD,      #ISP_IAP_BYTE_READ   ;Set ISP/IAP Byte-Read command
    MOV    IAP_TRIG,     #5AH                 ;Send trigger command1 (0x5a)
    MOV    IAP_TRIG,     #0A5H                ;Send trigger command2 (0xa5)
    NOP                  ;CPU will hold here until ISP/IAP/EEPROM operation complete
    MOV    A,            IAP_DATA             ;Read ISP/IAP/EEPROM data

;/*Disable ISP/IAP/EEPROM function, make MCU in a safe state*/
    MOV    IAP_CONTR,    #00000000B           ;Close ISP/IAP/EEPROM function
    MOV    IAP_CMD,      #00000000B           ;Clear ISP/IAP/EEPROM command
    ;MOV   IAP_TRIG,     #00000000B           ;Clear trigger register to prevent mistrigger
    ;MOV   IAP_ADDRH,    #0FFH                ;Move FFH into address high-byte unit,
                                              ;Data ptr point to non-EEPROM area
    ;MOV   IAP_ADDRL,    #0FFH                ;Move FFH into address low-byte unit,
                                              ;prevent misuse

;/*Byte-Program, if the byte is null(0FFH), it can be programmed; else, MCU must operate Sector-Erase firstly,
and then can operate Byte-Program.*/
    MOV    IAP_DATA,     #ONE_DATA            ;Write ISP/IAP/EEPROM data
    MOV    IAP_ADDRH,    #BYTE_ADDR_HIGH      ;Set ISP/IAP/EEPROM address high
    MOV    IAP_ADDRL,    #BYTE_ADDR_LOW       ;Set ISP/IAP/EEPROM address low
    MOV    IAP_CONTR,    #WAIT_TIME           ;Set wait time
```

STC MCU Limited.

```
ORL     IAP_CONTR,      #10000000B              ;Open ISP/IAP function
        MOV     IAP_CMD,        #ISP_IAP_BYTE_READ      ;Set ISP/IAP Byte-Read command
        MOV     IAP_TRIG,       #5AH                    ;Send trigger command1 (0x5a)
        MOV     IAP_TRIG,       #0A5H                   ;Send trigger command2 (0xa5)
        NOP                     ;CPU will hold here until ISP/IAP/EEPROM operation complete

;/*Disable ISP/IAP/EEPROM function, make MCU in a safe state*/
        MOV     IAP_CONTR,      #00000000B              ;Close ISP/IAP/EEPROM function
        MOV     IAP_CMD,        #00000000B              ;Clear ISP/IAP/EEPROM command
        ;MOV    IAP_TRIG,       #00000000B              ;Clear trigger register to prevent mistrigger
        ;MOV    IAP_ADDRH,      #FFH                    ;Move FFH into address high-byte unit,
                                                        ;Data ptr point to non-EEPROM area
        ;MOV    IAP_ADDRL,      #0FFH                   ;Move FFH into address low-byte unit,
                                                        ;prevent misuse

;/*Erase one sector area, there is only Sector-Erase instead of Byte-Erase, every sector area account for 512 bytes*/
        MOV     IAP_ADDRH,      #SECTOT_FIRST_BYTE_ADDR_HIGH
                                                        ;Set the sector area starting address high
        MOV     IAP_ADDRL,      #SECTOT_FIRST_BYTE_ADDR_LOW
                                                        ;Set the sector area starting address low
        MOV     IAP_CONTR,      #WAIT_TIME              ;Set wait time
        ORL     IAP_CONTR,      #10000000B              ;Open ISP/IAP function
        MOV     IAP_CMD,        #ISP_IAP_SECTOR_ERASE           ;Set Sectot-Erase command
        MOV     IAP_TRIG,       #5AH                    ;Send trigger command1 (0x5a)
        MOV     IAP_TRIG,       #0A5H                   ;Send trigger command2 (0xa5)
        NOP                     ;CPU will hold here until ISP/IAP/EEPROM operation complete

;/*Disable ISP/IAP/EEPROM function, make MCU in a safe state*/
        MOV     IAP_CONTR,      #00000000B              ;Close ISP/IAP/EEPROM function
        MOV     IAP_CMD,        #00000000B              ;Clear ISP/IAP/EEPROM command
        ;MOV    IAP_TRIG,       #00000000B              ;Clear trigger register to prevent mistrigger
        ;MOV    IAP_ADDRH,      #0FFH                   ;Move FFH into address high-byte unit,
                                                        ; Data ptr point to non-EEPROM area
        ;MOV    IAP_ADDRL,      #0FFH                   ;Move FFH into address low-byte unit,
                                                        ;prevent misuse
```

STC MCU Limited.

Little common sense: (STC MCU Data Flash use as EEPROM function)

Three basic commands -- bytes read, byte programming, the sector erased

Byte programming: "1" write "1" or "0", will "0" write "0".Just FFH can byte programming. If the byte not FFH, you must erase the sector , because only the "sectors erased" to put "0" into "1".

Sector erased: only "sector erased" will also be a "0" erased for "1".

Big proposal:

1. The same times modified data in the same sector, not the same times modified data in other sectors, won't have to read protection.

2. If a sector with only one byte, that's real EEPROM, STC MCU Data Flash faster than external EEPROM, read a byte/many one byte programming is about 2 clock / 55uS.

3. If in a sector of storing a large amounts of data, a only need to modify one part of a byte, or when the other byte don't need to modify data must first read on STC MCU, then erased RAM the whole sector, again will need to keep data and need to amend data in bytes written back to this sector section literally only bytes written orders (without continuous bytes, write command). Then each sector use bytes are using the less the convenient (not need read a lot of maintained data).

STC MCU Limited

Frequently asked questions:

1. IAP instructions after finishing, address is automatically "add 1" or "minus 1"?

   Answer: not

2. Send 5A and A5 after IAP ordered the trigger whether to have sent 5A and A5 trigger?

   Answer: yes

9.4 EEPROM Demo Program (C and ASM)

9.4.1 EEPROM Demo Program (not Transmit data by UART)

1. C Program Listing

```
/*---------------------------------------------------------------------------------------------------*/
/* --- STC MCU  Limited. ---------------------------------------------------------------------------*/
/* --- Exam Program EEPROM/IAP ---------------------------------------------------------------------*/
/* --- Mobile: (86)13922805190 ---------------------------------------------------------------------*/
/* --- Fax: 86-755-82905966 ------------------------------------------------------------------------*/
/* --- Tel: 86-755-82948412 ------------------------------------------------------------------------*/
/* --- Web: www.STCMCU.com -------------------------------------------------------------------------*/
/* If you want to use the program or the program referenced in the  ----------------------------*/
/* article, please specify in which data and procedures from STC    ----------------------------*/
/*---- In Keil C development environment, select the Intel 8052 to compiling ---------------------*/
/*----  And only contain < reg51.h > as header file ------------------------------------------------*/
/*---------------------------------------------------------------------------------------------------*/

//suppose the frequency of test chip is 18.432MHz

void IapIdle();
BYTE IapReadByte(WORD addr);

#include "reg51.h"
#include "intrins.h"

typedef unsigned char BYTE;
typedef unsigned int WORD;

//-----------------------------------------

sfr         IAP_DATA        =   0xC2;           //IAP data register
sfr         IAP_ADDRH       =   0xC3;           //IAP address HIGH
sfr         IAP_ADDRL       =   0xC4;           //IAP address LOW
sfr         IAP_CMD         =   0xC5;           //IAP command register
sfr         IAP_TRIG        =   0xC6;           //IAP command trigger register
sfr         IAP_CONTR       =   0xC7;           //IAP control register

#define     CMD_IDLE        0                   //Stand-By
#define     CMD_READ        1                   //IAP Byte-Read
#define     CMD_PROGRAM     2                   //IAP Byte-Program
#define     CMD_ERASE       3                   //IAP Sector-Erase

//#define   ENABLE_IAP      0x80                //if SYSCLK<30MHz
//#define   ENABLE_IAP      0x81                //if SYSCLK<24MHz
#define     ENABLE_IAP      0x82                //if SYSCLK<20MHz
//#define   ENABLE_IAP      0x83                //if SYSCLK<12MHz
//#define   ENABLE_IAP      0x84                //if SYSCLK<6MHz
```

STC MCU Limited.

```
//#define  ENABLE_IAP      0x85            //if SYSCLK<3MHz
//#define  ENABLE_IAP      0x86            //if SYSCLK<2MHz
//#define  ENABLE_IAP      0x87            //if SYSCLK<1MHz

//Start address for STC15 series MCU EEPROM
#define   IAP_ADDRESS     0x0400

void Delay(BYTE n);
void IapIdle();
BYTE IapReadByte(WORD addr);
void IapProgramByte(WORD addr, BYTE dat);
void IapEraseSector(WORD addr);

void main()
{
        WORD i;

        P1 = 0xfe;                          //1111,1110 System Reset OK
        Delay(10);                          //Delay
        IapEraseSector(IAP_ADDRESS);        //Erase current sector
        for (i=0; i<512; i++)               //Check whether all sector data is FF
        {
                if (IapReadByte(IAP_ADDRESS+i) != 0xff)
                goto Error;                 //If error, break
        }
        P1 = 0xfc;                          //1111,1100 Erase successful
        Delay(10);                          //Delay
        for (i=0; i<512; i++)               //Program 512 bytes data into data flash
        {
                IapProgramByte(IAP_ADDRESS+i, (BYTE)i);
        }
        P1 = 0xf8;                          //1111,1000 Program successful
        Delay(10);                          //Delay
        for (i=0; i<512; i++)               //Verify 512 bytes data
        {
                if (IapReadByte(IAP_ADDRESS+i) != (BYTE)i)
                goto Error;                 //If error, break
        }
        P1 = 0xf0;                          //1111,0000 Verify successful
        while (1);
        Error:
        P1 &= 0x7f;                         //0xxx,xxxx IAP operation fail
        while (1);
}
```

STC MCU Limited.

```
/*---------------------------
Software delay function
---------------------------*/
void Delay(BYTE n)
{
	WORD x;

	while (n--)
	{
		x = 0;
		while (++x);
	}
}

/*---------------------------
Disable ISP/IAP/EEPROM function
Make MCU in a safe state
---------------------------*/
void IapIdle()
{
	IAP_CONTR	= 0;		//Close IAP function
	IAP_CMD		= 0;		//Clear command to standby
	IAP_TRIG	= 0;		//Clear trigger register
	IAP_ADDRH	= 0x80;		//Data ptr point to non-EEPROM area
	IAP_ADDRL	= 0;		//Clear IAP address to prevent misuse
}
/*---------------------------
Read one byte from ISP/IAP/EEPROM area
Input: addr (ISP/IAP/EEPROM address)
Output:Flash data
---------------------------*/
BYTE IapReadByte(WORD addr)
{
	BYTE dat;			//Data buffer

	IAP_CONTR = ENABLE_IAP;		//Open IAP function, and set wait time
	IAP_CMD = CMD_READ;		//Set ISP/IAP/EEPROM READ command
	IAP_ADDRL = addr;		//Set ISP/IAP/EEPROM address low
	IAP_ADDRH = addr >> 8;		//Set ISP/IAP/EEPROM address high
	IAP_TRIG = 0x5a;		//Send trigger command1 (0x5a)
	IAP_TRIG = 0xa5;		//Send trigger command2 (0xa5)
	_nop_();			//MCU will hold here until ISP/IAP/EEPROM
					//operation complete
	dat = IAP_DATA;			//Read ISP/IAP/EEPROM data
	IapIdle();			//Close ISP/IAP/EEPROM function

	return dat;			//Return Flash data
}
```

STC MCU Limited.

```
/*------------------------------
Program one byte to ISP/IAP/EEPROM area
Input: addr (ISP/IAP/EEPROM address)
     dat (ISP/IAP/EEPROM data)
Output:-
------------------------------*/

void IapProgramByte(WORD addr, BYTE dat)
{
        IAP_CONTR = ENABLE_IAP;         //Open IAP function, and set wait time
        IAP_CMD = CMD_PROGRAM;          //Set ISP/IAP/EEPROM PROGRAM command
        IAP_ADDRL = addr;               //Set ISP/IAP/EEPROM address low
        IAP_ADDRH = addr >> 8;          //Set ISP/IAP/EEPROM address high
        IAP_DATA = dat;                 //Write ISP/IAP/EEPROM data
        IAP_TRIG = 0x5a;                //Send trigger command1 (0x5a)
        IAP_TRIG = 0xa5;                //Send trigger command2 (0xa5)
        _nop_();                        //MCU will hold here until ISP/IAP/EEPROM
                                        //operation complete
        IapIdle();
}

/*------------------------------
Erase one sector area
Input: addr (ISP/IAP/EEPROM address)
Output:-
------------------------------*/
void IapEraseSector(WORD addr)
{
        IAP_CONTR = ENABLE_IAP;         //Open IAP function, and set wait time
        IAP_CMD = CMD_ERASE;            //Set ISP/IAP/EEPROM ERASE command
        IAP_ADDRL = addr;               //Set ISP/IAP/EEPROM address low
        IAP_ADDRH = addr >> 8;          //Set ISP/IAP/EEPROM address high
        IAP_TRIG = 0x5a;                //Send trigger command1 (0x5a)
        IAP_TRIG = 0xa5;                //Send trigger command2 (0xa5)
        _nop_();                        //MCU will hold here until ISP/IAP/EEPROM
                                        //operation complete
        IapIdle();
}
```

STC MCU Limited.

2. Assembler Listing

```
/*---------------------------------------------------------------------------------------------------*/
/* --- STC MCU  Limited. ---------------------------------------------------------------------------*/
/* --- Exam Program EEPROM/IAP ---------------------------------------------------------------------*/
/* --- Mobile: (86)13922805190 ---------------------------------------------------------------------*/
/* --- Fax: 86-755-82905966 ------------------------------------------------------------------------*/
/* --- Tel: 86-755-82948412 ------------------------------------------------------------------------*/
/* --- Web: www.STCMCU.com -------------------------------------------------------------------------*/
/* If you want to use the program or the program referenced in the  ----------------------------*/
/* article, please specify in which data and procedures from STC    ----------------------------*/
/*---- In Keil C development environment, select the Intel 8052 to compiling ------------------*/
/*----  And only contain < reg51.h > as header file ---------------------------------------------*/
/*---------------------------------------------------------------------------------------------------*/

//suppose the frequency of test chip is 18.432MHz

;/*Declare SFRs associated with the IAP */
IAP_DATA        EQU     0C2H                    ;Flash data register
IAP_ADDRH       EQU     0C3H                    ;Flash address HIGH
IAP_ADDRL       EQU     0C4H                    ;Flash address LOW
IAP_CMD         EQU     0C5H                    ;Flash command register
IAP_TRIG        EQU     0C6H                    ;Flash command trigger
IAP_CONTR       EQU     0C7H                    ;Flash control register

;/*Define ISP/IAP/EEPROM command*/
CMD_IDLE                EQU     0               ;Stand-By
CMD_READ                EQU     1               ;Byte-Read
CMD_PROGRAM             EQU     2               ;Byte-Program
CMD_ERASE               EQU     3               ;Sector-Erase

;ENABLE_IAP     EQU     80H                     //if SYSCLK<30MHz
;ENABLE_IAP     EQU     81H                     //if SYSCLK<24MHz
ENABLE_IAP      EQU     82H                     //if SYSCLK<20MHz
;ENABLE_IAP     EQU     83H                     //if SYSCLK<12MHz
;ENABLE_IAP     EQU     84H                     //if SYSCLK<6MHz
;ENABLE_IAP     EQU     85H                     //if SYSCLK<3MHz
;ENABLE_IAP     EQU     86H                     //if SYSCLK<2MHz
;ENABLE_IAP     EQU     87H                     //if SYSCLK<1MHz

//Start address for STC15 series MCU EEPROM
IAP_ADDRESS EQU 0400H
//-----------------------------------------
        ORG     0000H
        LJMP    MAIN
;-----------------------------------------
        ORG     0100H
MAIN:
        MOV     P1,     #0FEH                   //1111,1110   System Reset OK
        LCALL   DELAY                           //Delay
```

STC MCU Limited.

```
;-------------------------------
        MOV     DPTR,   #IAP_ADDRESS    ;Set ISP/IAP/EEPROM address
        LCALL   IAP_ERASE               ;Erase current sector
;-------------------------------
        MOV     DPTR,   #IAP_ADDRESS    ;Set ISP/IAP/EEPROM address
        MOV     R0,     #0              ;Set counter (512)
        MOV     R1,     #2
CHECK1:                                 ;Check whether all sector data is FF
        LCALL   IAP_READ                ;Read Flash
        CJNE    A,      #0FFH,  ERROR   ;If error, break
        INC     DPTR                    ;Inc Flash address
        DJNZ    R0,     CHECK1          ;Check next
        DJNZ    R1,     CHECK1          ;Check next
;-------------------------------
        MOV     P1,     #0FCH           ;1111,1100 Erase successful
        LCALL   DELAY                   ;Delay
;-------------------------------
        MOV     DPTR,   #IAP_ADDRESS    ;Set ISP/IAP/EEPROM address
        MOV     R0,     #0              ;Set counter (512)
        MOV     R1,     #2
        MOV     R2,     #0              ;Initial test data
NEXT:                                   ;Program 512 bytes data into data flash
        MOV     A,      R2              ;Ready IAP data
        LCALL   IAP_PROGRAM             ;Program flash
        INC     DPTR                    ;Inc Flash address
        INC     R2                      ;Modify test data
        DJNZ    R0,     NEXT            ;Program next
        DJNZ    R1,     NEXT            ;Program next
;-------------------------------
        MOV     P1,     #0F8H           ;1111,1000 Program successful
        LCALL   DELAY                   ;Delay
;-------------------------------
        MOV     DPTR,   #IAP_ADDRESS    ;Set ISP/IAP/EEPROM address
        MOV     R0,     #0              ;Set counter (512)
        MOV     R1,     #2
        MOV     R2,     #0

CHECK2:                                 ;Verify 512 bytes data
        LCALL   IAP_READ                ;Read Flash
        CJNE    A,  2,  ERROR           ;If error, break
        INC     DPTR                    ;Inc Flash address
        INC     R2                      ;Modify verify data
        DJNZ    R0,     CHECK2          ;Check next
        DJNZ    R1,     CHECK2          ;Check next
;-------------------------------
        MOV     P1,     #0F0H           ;1111,0000 Verify successful
        SJMP    $
```

STC MCU Limited.

```
;-------------------------------
ERROR:
        MOV     P0,     R0
        MOV     P2,     R1
        MOV     P3,     R2
        CLR     P1.7                    ;0xxx,xxxx IAP operation fail
        SJMP    $
;/*-----------------------------
;Software delay function
;-----------------------------*/
DELAY:
        CLR     A
        MOV     R0,     A
        MOV     R1,     A
        MOV     R2,     #20H
DELAY1:
        DJNZ    R0,     DELAY1
        DJNZ    R1,     DELAY1
        DJNZ    R2,     DELAY1
        RET
;/*---------------------------
;Disable ISP/IAP/EEPROM function
;Make MCU in a safe state
;---------------------------*/
IAP_IDLE:
        MOV     IAP_CONTR,      #0              ;Close IAP function
        MOV     IAP_CMD,        #0              ;Clear command to standby
        MOV     IAP_TRIG,       #0              ;Clear trigger register
        MOV     IAP_ADDRH,      #80H            ;Data ptr point to non-EEPROM area
        MOV     IAP_ADDRL,      #0              ;Clear IAP address to prevent misuse
        RET

;/*---------------------------
;Read one byte from ISP/IAP/EEPROM area
;Input: DPTR(ISP/IAP/EEPROM address)
;Output:ACC (Flash data)
;---------------------------*/
IAP_READ:
        MOV     IAP_CONTR,      #ENABLE_IAP     ;Open IAP function, and set wait time
        MOV     IAP_CMD,        #CMD_READ       ;Set ISP/IAP/EEPROM READ command
        MOV     IAP_ADDRL,      DPL             ;Set ISP/IAP/EEPROM address low
        MOV     IAP_ADDRH,      DPH             ;Set ISP/IAP/EEPROM address high
        MOV     IAP_TRIG,       #5AH            ;Send trigger command1 (0x5a)
        MOV     IAP_TRIG,       #0A5H           ;Send trigger command2 (0xa5)
        NOP                     ;MCU will hold here until ISP/IAP/EEPROM operation complete
        MOV     A,      IAP_DATA                ;Read ISP/IAP/EEPROM data
        LCALL   IAP_IDLE                        ;Close ISP/IAP/EEPROM function
        RET
```

STC MCU Limited.

```
;/*------------------------------
;Program one byte to ISP/IAP/EEPROM area
;Input: DPAT(ISP/IAP/EEPROM address)
;ACC (ISP/IAP/EEPROM data)
;Output:-
;------------------------------*/
IAP_PROGRAM:
        MOV     IAP_CONTR,      #ENABLE_IAP     ;Open IAP function, and set wait time
        MOV     IAP_CMD,        #CMD_PROGRAM    ;Set ISP/IAP/EEPROM PROGRAM command
        MOV     IAP_ADDRL,      DPL             ;Set ISP/IAP/EEPROM address low
        MOV     IAP_ADDRH,      DPH             ;Set ISP/IAP/EEPROM address high
        MOV     IAP_DATA,       A               ;Write ISP/IAP/EEPROM data
        MOV     IAP_TRIG,       #5AH            ;Send trigger command1 (0x5a)
        MOV     IAP_TRIG,       #0A5H           ;Send trigger command2 (0xa5)
        NOP                     ;MCU will hold here until ISP/IAP/EEPROM operation complete
        LCALL   IAP_IDLE                        ;Close ISP/IAP/EEPROM function
        RET

;/*------------------------------
;Erase one sector area
;Input: DPTR(ISP/IAP/EEPROM address)
;Output:-
;------------------------------*/
IAP_ERASE:
        MOV     IAP_CONTR,      #ENABLE_IAP     ;Open IAP function, and set wait time
        MOV     IAP_CMD,        #CMD_ERASE      ;Set ISP/IAP/EEPROM ERASE command
        MOV     IAP_ADDRL,      DPL             ;Set ISP/IAP/EEPROM address low
        MOV     IAP_ADDRH,      DPH             ;Set ISP/IAP/EEPROM address high
        MOV     IAP_TRIG,       #5AH            ;Send trigger command1 (0x5a)
        MOV     IAP_TRIG,       #0A5H           ;Send trigger command2 (0xa5)
        NOP                     ;MCU will hold here until ISP/IAP/EEPROM operation complete
        LCALL   IAP_IDLE                        ;Close ISP/IAP/EEPROM function
        RET

        END
```

STC MCU Limited

9.4.2 EEPROM Demo Program (Transmit data by UART) (C and ASM)

1. C Program Listing

```
/*---------------------------------------------------------------------------------------------------------*/
/* --- STC MCU  Limited. ---------------------------------------------------------------------------------*/
/* --- Exam Program EEPROM/IAP ---------------------------------------------------------------------------*/
/* --- Mobile: (86)13922805190 ---------------------------------------------------------------------------*/
/* --- Fax: 86-755-82905966 ------------------------------------------------------------------------------*/
/* --- Tel: 86-755-82948412 ------------------------------------------------------------------------------*/
/* --- Web: www.STCMCU.com -------------------------------------------------------------------------------*/
/* If you want to use the program or the program referenced in the  ----------------------------*/
/* article, please specify in which data and procedures from STC    ----------------------------*/
/*---- In Keil C development environment, select the Intel 8052 to compiling ------------------*/
/*----  And only contain < reg51.h > as header file ---------------------------------------------*/
/*---------------------------------------------------------------------------------------------------------*/

//suppose the frequency of test chip is 18.432MHz

#include "reg51.h"
#include "intrins.h"

typedef unsigned char BYTE;
typedef unsigned int WORD;

//-----------------------------------------
sfr     IAP_DATA    =  0xC2;          //IAP data register
sfr     IAP_ADDRH   =  0xC3;          //IAP address HIGH
sfr     IAP_ADDRL   =  0xC4;          //IAP address LOW
sfr     IAP_CMD     =  0xC5;          //IAP command register
sfr     IAP_TRIG    =  0xC6;          //IAP command trigger register
sfr     IAP_CONTR   =  0xC7;          //IAP control register

#define CMD_IDLE    0                 //Stand-By
#define CMD_READ    1                 //IAP Byte-Read
#define CMD_PROGRAM 2                 //IAP Byte-Program
#define CMD_ERASE   3                 //IAP Sector-Erase

#define URMD  0       //0: select T2 as UART1 baud-rate generator
                      //1: select T1 as UART1 baud-rate generator(T1 as 16-bit auto-relaod timer/counter)
                      //2: select T1 as UART1 baud-rate generator (T1 as 8-bit auto-relaod timer/counter)

sfr     T2H     =     0xd6;
sfr     T2L     =     0xd7;

sfr     AUXR    =     0x8e;     //Auxiliary register
```

STC MCU Limited.

```
//#define  ENABLE_IAP      0x80            //if SYSCLK<30MHz
//#define  ENABLE_IAP      0x81            //if SYSCLK<24MHz
#define    ENABLE_IAP      0x82            //if SYSCLK<20MHz
//#define  ENABLE_IAP      0x83            //if SYSCLK<12MHz
//#define  ENABLE_IAP      0x84            //if SYSCLK<6MHz
//#define  ENABLE_IAP      0x85            //if SYSCLK<3MHz
//#define  ENABLE_IAP      0x86            //if SYSCLK<2MHz
//#define  ENABLE_IAP      0x87            //if SYSCLK<1MHz

//Start address for STC15 series MCU EEPROM
#define IAP_ADDRESS 0x0400

void Delay(BYTE n);
void IapIdle();
BYTE IapReadByte(WORD addr);
void IapProgramByte(WORD addr, BYTE dat);
void IapEraseSector(WORD addr);
void InitUart();
BYTE SendData(BYTE dat);

void main()
{
    WORD i;

    P1 = 0xfe;                          //1111,1110  System Reset OK
    InitUart();                         //Initialize UART
    Delay(10);                          //Delay
    IapEraseSector(IAP_ADDRESS);        //Erase current sector
    for (i=0; i<512; i++)               //Check whether all sector data is FF
    {
        if (SendData(IapReadByte(IAP_ADDRESS+i)) != 0xff)
        goto Error;                     //If error, break
    }
    P1 = 0xfc;                          //1111,1100  Erase successful
    Delay(10);                          //Delay
    for (i=0; i<512; i++)               //Program 512 bytes data into data flash
    {
        IapProgramByte(IAP_ADDRESS+i, (BYTE)i);
    }
    P1 = 0xf8;                          //1111,1000  Program successful
    Delay(10);                          //Delay
    for (i=0; i<512; i++)               //Verify 512 bytes data
    {
        if (SendData(IapReadByte(IAP_ADDRESS+i)) != (BYTE)i)
        goto Error;                     //If error, break
    }
    P1 = 0xf0;                          //1111,0000  Verify successful
    while (1);
```

STC MCU Limited.

```
Error:
        P1 &= 0x7f;                                     //0xxx,xxxx IAP operation fail
        while (1);
}

/*-----------------------------
software delay
-----------------------------*/
void Delay(BYTE n)
{
        WORD x;

        while (n--)
        {
                x = 0;
                while (++x);
        }
}

/*-----------------------------
Disable ISP/IAP/EEPROM function
Make MCU in a safe state
-----------------------------*/
void IapIdle()
{
        IAP_CONTR       = 0;            //Close IAP function
        IAP_CMD         = 0;            //Clear command to standby
        IAP_TRIG        = 0;            //Clear trigger register
        IAP_ADDRH       = 0x80;         //Data ptr point to non-EEPROM area
        IAP_ADDRL       = 0;            //Clear IAP address to prevent misuse
}
/*-----------------------------
Read one byte from ISP/IAP/EEPROM area
Input: addr (ISP/IAP/EEPROM address)
Output:Flash data
-----------------------------*/
BYTE IapReadByte(WORD addr)
{
        BYTE dat;                       //Data buffer

        IAP_CONTR = ENABLE_IAP;         //Open IAP function, and set wait time
        IAP_CMD = CMD_READ;             //Set ISP/IAP/EEPROM READ command
        IAP_ADDRL = addr;               //Set ISP/IAP/EEPROM address low
        IAP_ADDRH = addr >> 8;          //Set ISP/IAP/EEPROM address high
        IAP_TRIG = 0x5a;                //Send trigger command1 (0x5a)
        IAP_TRIG = 0xa5;                //Send trigger command2 (0xa5)
```

STC MCU Limited.

```
        _nop_();                        //MCU will hold here until ISP/IAP/EEPROM
                                        //operation complete
        dat = IAP_DATA;                 //Read ISP/IAP/EEPROM data
        IapIdle();                      //Close ISP/IAP/EEPROM function

        return dat;                     //Return Flash data
}

/*----------------------------
Program one byte to ISP/IAP/EEPROM area
Input: addr (ISP/IAP/EEPROM address)
    dat (ISP/IAP/EEPROM data)
Output:-
----------------------------*/

void IapProgramByte(WORD addr, BYTE dat)
{
        IAP_CONTR = ENABLE_IAP;         //Open IAP function, and set wait time
        IAP_CMD = CMD_PROGRAM;          //Set ISP/IAP/EEPROM PROGRAM command
        IAP_ADDRL = addr;               //Set ISP/IAP/EEPROM address low
        IAP_ADDRH = addr >> 8;          //Set ISP/IAP/EEPROM address high
        IAP_DATA = dat;                 //Write ISP/IAP/EEPROM data
        IAP_TRIG = 0x5a;                //Send trigger command1 (0x5a)
        IAP_TRIG = 0xa5;                //Send trigger command2 (0xa5)
        _nop_();                        //MCU will hold here until ISP/IAP/EEPROM
                                        //operation complete
        IapIdle();
}
/*----------------------------
Erase one sector area
Input: addr (ISP/IAP/EEPROM address)
Output:-
----------------------------*/
void IapEraseSector(WORD addr)
{
        IAP_CONTR = ENABLE_IAP;         //Open IAP function, and set wait time
        IAP_CMD = CMD_ERASE;            //Set ISP/IAP/EEPROM ERASE command
        IAP_ADDRL = addr;               //Set ISP/IAP/EEPROM address low
        IAP_ADDRH = addr >> 8;          //Set ISP/IAP/EEPROM address high
        IAP_TRIG = 0x5a;                //Send trigger command1 (0x5a)
        IAP_TRIG = 0xa5;                //Send trigger command2 (0xa5)
        _nop_();                        //MCU will hold here until ISP/IAP/EEPROM
                                        //operation complete
        IapIdle();
}
```

STC MCU Limited.

```
/*---------------------------
Initialize UART
---------------------------*/
void InitUart()
{
        SCON    =       0x5a;                   //set UART1 as 8-bit UART with variable baud-rate
#if     URMD    ==      0
        T2L     =       0xd8;                   //Set the preload value
        T2H     =       0xff;                   //115200 bps(65536-18432000/4/115200)
        AUXR    =       0x14;                   //T2 in 1T mode,  and run T2
        AUXR    |=      0x01;                   //select T2 as UART1 baud rate generator
#elif   URMD    ==      1
        AUXR    =       0x40;                   //T1 in 1T mode
        TMOD    =       0x00;                   //T1 in mode 0 (16-bit auto-reload timer/counter)
        TL1     =       0xd8;                   //Set the preload value
        TH1     =       0xff;                   //115200 bps(65536-18432000/4/115200)
        TR1     =       1;                      //run T1
#else
        TMOD    =       0x20;                   //T1 in mode 2 (8-bit auto-reload timer/counter)
        AUXR    =       0x40;                   //T1 in 1T mode
        TH1 = TL1 =     0xfb;                   //115200 bps(256 - 18432000/32/115200)
        TR1     =       1;
#endif
}

/*---------------------------
Send data
---------------------------*/
BYTE SendData(BYTE dat)
{
        while (!TI);
        TI = 0;                                 //Clear TI
        SBUF = dat;

        return dat;
}
```

STC MCU Limited

2. Assembler Listing

```
/*---------------------------------------------------------------------------------------------------------*/
/* --- STC MCU  Limited. ---------------------------------------------------------------------------------*/
/* --- Exam Program EEPROM/IAP ---------------------------------------------------------------------------*/
/* --- Mobile: (86)13922805190 ---------------------------------------------------------------------------*/
/* --- Fax: 86-755-82905966 ------------------------------------------------------------------------------*/
/* --- Tel: 86-755-82948412 ------------------------------------------------------------------------------*/
/* --- Web: www.STCMCU.com -------------------------------------------------------------------------------*/
/* If you want to use the program or the program referenced in the  ----------------------------*/
/* article, please specify in which data and procedures from STC    ----------------------------*/
/*---- In Keil C development environment, select the Intel 8052 to compiling ------------------*/
/*----  And only contain < reg51.h > as header file ---------------------------------------------*/
/*---------------------------------------------------------------------------------------------------------*/

//suppose the frequency of test chip is 18.432MHz

#define   URMD   0        //0: select T2 as UART1 baud-rate generator
                          //1: select T1 as UART1 baud-rate generator(T1 as 16-bit auto-relaod timer/counter)
                          //2: select T1 as UART1 baud-rate generator (T1 as 8-bit auto-relaod timer/counter)

T2H     DATA    0D6H
T2L     DATA    0D7H
AUXR    DATA    08EH        //Auxiliary register

;/*Declare SFRs associated with the IAP */
IAP_DATA        EQU     0C2H            ;Flash data register
IAP_ADDRH       EQU     0C3H            ;Flash address HIGH
IAP_ADDRL       EQU     0C4H            ;Flash address LOW
IAP_CMD         EQU     0C5H            ;Flash command register
IAP_TRIG        EQU     0C6H            ;Flash command trigger
IAP_CONTR       EQU     0C7H            ;Flash control register

;/*Define ISP/IAP/EEPROM command*/
CMD_IDLE                EQU     0       ;Stand-By
CMD_READ                EQU     1       ;Byte-Read
CMD_PROGRAM             EQU     2       ;Byte-Program
CMD_ERASE               EQU     3       ;Sector-Erase

;ENABLE_IAP     EQU     80H             //if SYSCLK<30MHz
;ENABLE_IAP     EQU     81H             //if SYSCLK<24MHz
ENABLE_IAP      EQU     82H             //if SYSCLK<20MHz
;ENABLE_IAP     EQU     83H             //if SYSCLK<12MHz
;ENABLE_IAP     EQU     84H             //if SYSCLK<6MHz
;ENABLE_IAP     EQU     85H             //if SYSCLK<3MHz
;ENABLE_IAP     EQU     86H             //if SYSCLK<2MHz
;ENABLE_IAP     EQU     87H             //if SYSCLK<1MHz
```

STC MCU Limited.

```
//Start address for STC15 series MCU EEPROM
IAP_ADDRESS EQU 0400H
//-----------------------------------------
        ORG     0000H
        LJMP    MAIN
;-----------------------------------------
        ORG     0100H
MAIN:
        LCALL   INIT_UART                       //Initialize UART
        MOV     P1,     #0FEH                   //1111,1110   System Reset OK
        LCALL   DELAY                           //Delay
;------------------------------
        MOV     DPTR,   #IAP_ADDRESS            //Set ISP/IAP/EEPROM address
        LCALL   IAP_ERASE                       //Sector erase
;------------------------------
        MOV     DPTR,   #IAP_ADDRESS            //Set ISP/IAP/EEPROM address
        MOV     R0,     #0                      //Set counter (512)
        MOV     R1,     #2
CHECK1:                                         ;Check whether all sector data is FF
        LCALL           IAP_READ                ;Read Flash
        CJNE            A,      #0FFH,  ERROR   ;If error, break
        INC             DPTR                    ;Inc Flash address
        DJNZ            R0,     CHECK1          ;Check next
        DJNZ            R1,     CHECK1          ;Check next
;------------------------------
        MOV             P1,     #0FCH           ;1111,1100 Erase successful
        LCALL           DELAY                   ;Delay
;------------------------------
        MOV             DPTR,   #IAP_ADDRESS    ;Set ISP/IAP/EEPROM address
        MOV             R0,     #0              ;Set counter (512)
        MOV             R1,     #2
        MOV             R2,     #0              ;Initial test data
NEXT:                                           ;Program 512 bytes data into data flash
        MOV             A,      R2              ;Ready IAP data
        LCALL           IAP_PROGRAM             ;Program flash
        INC             DPTR                    ;Inc Flash address
        INC             R2                      ;Modify test data
        DJNZ            R0,     NEXT            ;Program next
        DJNZ            R1,     NEXT            ;Program next
;------------------------------
        MOV             P1,     #0F8H           ;1111,1000 Program successful
        LCALL           DELAY                   ;Delay
;------------------------------
        MOV             DPTR,   #IAP_ADDRESS    ;Set ISP/IAP/EEPROM address
        MOV             R0,     #0              ;Set counter (512)
        MOV             R1,     #2
        MOV             R2,     #0
```

STC MCU Limited.

```
CHECK2:                                                 ;Verify 512 bytes data
        LCALL   IAP_READ                                ;Read Flash
        CJNE    A,  2,  ERROR                           ;If error, break
        INC     DPTR                                    ;Inc Flash address
        INC     R2                                      ;Modify verify data
        DJNZ    R0,     CHECK2                          ;Check next
        DJNZ    R1,     CHECK2                          ;Check next
;--------------------------------
        MOV     P1,     #0F0H                           ;1111,0000 Verify successful
        SJMP    $

;--------------------------------
ERROR:
        MOV     P0,     R0
        MOV     P2,     R1
        MOV     P3,     R2
        CLR     P1.7                                    ;0xxx,xxxx IAP operation fail
        SJMP    $
;/*----------------------------
;Software delay function
;----------------------------*/
DELAY:
        CLR     A
        MOV     R0,     A
        MOV     R1,     A
        MOV     R2,     #20H
DELAY1:
        DJNZ    R0,     DELAY1
        DJNZ    R1,     DELAY1
        DJNZ    R2,     DELAY1
        RET
;/*----------------------------
;Disable ISP/IAP/EEPROM function
;Make MCU in a safe state
;----------------------------*/
IAP_IDLE:
        MOV     IAP_CONTR,      #0              ;Close IAP function
        MOV     IAP_CMD,        #0              ;Clear command to standby
        MOV     IAP_TRIG,       #0              ;Clear trigger register
        MOV     IAP_ADDRH,      #80H            ;Data ptr point to non-EEPROM area
        MOV     IAP_ADDRL,      #0              ;Clear IAP address to prevent misuse
        RET
;/*----------------------------
;Read one byte from ISP/IAP/EEPROM area
;Input: DPTR(ISP/IAP/EEPROM address)
;Output:ACC (Flash data)
;----------------------------*/
```

STC MCU Limited.

```
IAP_READ:
        MOV     IAP_CONTR,      #ENABLE_IAP     ;Open IAP function, and set wait time
        MOV     IAP_CMD,        #CMD_READ       ;Set ISP/IAP/EEPROM READ command
        MOV     IAP_ADDRL,      DPL             ;Set ISP/IAP/EEPROM address low
        MOV     IAP_ADDRH,      DPH             ;Set ISP/IAP/EEPROM address high
        MOV     IAP_TRIG,       #5AH            ;Send trigger command1 (0x5a)
        MOV     IAP_TRIG,       #0A5H           ;Send trigger command2 (0xa5)
        NOP                     ;MCU will hold here until ISP/IAP/EEPROM operation complete
        MOV     A,      IAP_DATA                ;Read ISP/IAP/EEPROM data
        LCALL   IAP_IDLE                        ;Close ISP/IAP/EEPROM function
        RET

;/*---------------------------
;Program one byte to ISP/IAP/EEPROM area
;Input: DPAT(ISP/IAP/EEPROM address)
;ACC (ISP/IAP/EEPROM data)
;Output:-
;---------------------------*/
IAP_PROGRAM:
        MOV     IAP_CONTR,      #ENABLE_IAP     ;Open IAP function, and set wait time
        MOV     IAP_CMD,        #CMD_PROGRAM    ;Set ISP/IAP/EEPROM PROGRAM command
        MOV     IAP_ADDRL,      DPL             ;Set ISP/IAP/EEPROM address low
        MOV     IAP_ADDRH,      DPH             ;Set ISP/IAP/EEPROM address high
        MOV     IAP_DATA,       A               ;Write ISP/IAP/EEPROM data
        MOV     IAP_TRIG,       #5AH            ;Send trigger command1 (0x5a)
        MOV     IAP_TRIG,       #0A5H           ;Send trigger command2 (0xa5)
        NOP                     ;MCU will hold here until ISP/IAP/EEPROM operation complete
        LCALL   IAP_IDLE                        ;Close ISP/IAP/EEPROM function
        RET
;/*---------------------------
;Erase one sector area
;Input: DPTR(ISP/IAP/EEPROM address)
;Output:-
;---------------------------*/
IAP_ERASE:
        MOV     IAP_CONTR,      #ENABLE_IAP     ;Open IAP function, and set wait time
        MOV     IAP_CMD,        #CMD_ERASE      ;Set ISP/IAP/EEPROM ERASE command
        MOV     IAP_ADDRL,      DPL             ;Set ISP/IAP/EEPROM address low
        MOV     IAP_ADDRH,      DPH             ;Set ISP/IAP/EEPROM address high
        MOV     IAP_TRIG,       #5AH            ;Send trigger command1 (0x5a)
        MOV     IAP_TRIG,       #0A5H           ;Send trigger command2 (0xa5)
        NOP                     ;MCU will hold here until ISP/IAP/EEPROM operation complete
        LCALL   IAP_IDLE                        ;Close ISP/IAP/EEPROM function
        RET
```

STC MCU Limited.

```
;/*----------------------------
;Initialize UART
;----------------------------*/
INIT_UART:
        MOV     SCON,   #5AH            ;set UART1 as 8-bit UART with variable baud-rate
#if URMD == 0
        MOV     T2L,    #0D8H           ;Set the preload value (65536-18432000/4/115200)
        MOV     T2H,    #0FFH
        MOV     AUXR,   #14H            ;T2 in 1T mode,  and run T2
        ORL     AUXR,   #01H            ;select T2 as UART1 baud rate generator
#elif URMD == 1
        MOV     AUXR,   #40H            ;T1 in 1T mode
        MOV     TMOD,   #00H            ;T1 in mode 0 (16-bit auto-reload timer/counter)
        MOV     TL1,    #0D8H           ;Set the preload value(65536-18432000/4/115200)
        MOV     TH1,    #0FFH
        SETB    TR1                     ;run T1
#else
        MOV     TMOD,   #20H            ;T1 in mode 2 (8-bit auto-reload timer/counter)
        MOV     AUXR,   #40H            ;T1 in 1T mode
        MOV     TL1,    #0FBH           ;115200 bps(256 - 18432000/32/115200)
        MOV     TH1,    #0FBH
        SETB    TR1
#endif
        RET

;/*----------------------------
;Send data
;----------------------------*/
SEND_DATA:
        JNB     TI,     $
        CLR     TI                      ;Clear TI
        MOV     SBUF,   A
        RET


        END
```

STC MCU Limited.

Chapter 10 Analog to Digital Converter

The special peripheral function of STC15 series MCU are summarized as shown in the following table.

Special peripheral Functiom / Type MCU	8-Channel 10-bit high-speed A/D Converter	CCP/PCA/PWM Function	a group of high-speed synchronous serial peripheral interface ----SPI
STC15W4K32S4 series	√	√	√
STC15F2K60S2 series	√	√	√
STC15W1K16S series			√
STC15W404S series			√
STC15W401AS series	√	√	√
STC15W201S series			
STC15F408AD series	√	√	√
STC15W10x series			
STC15F101W series			

√ means the corresponding series MCU have the corresponding peripheral function

STC MCU Limited.

10.1 A/D Converter Structure

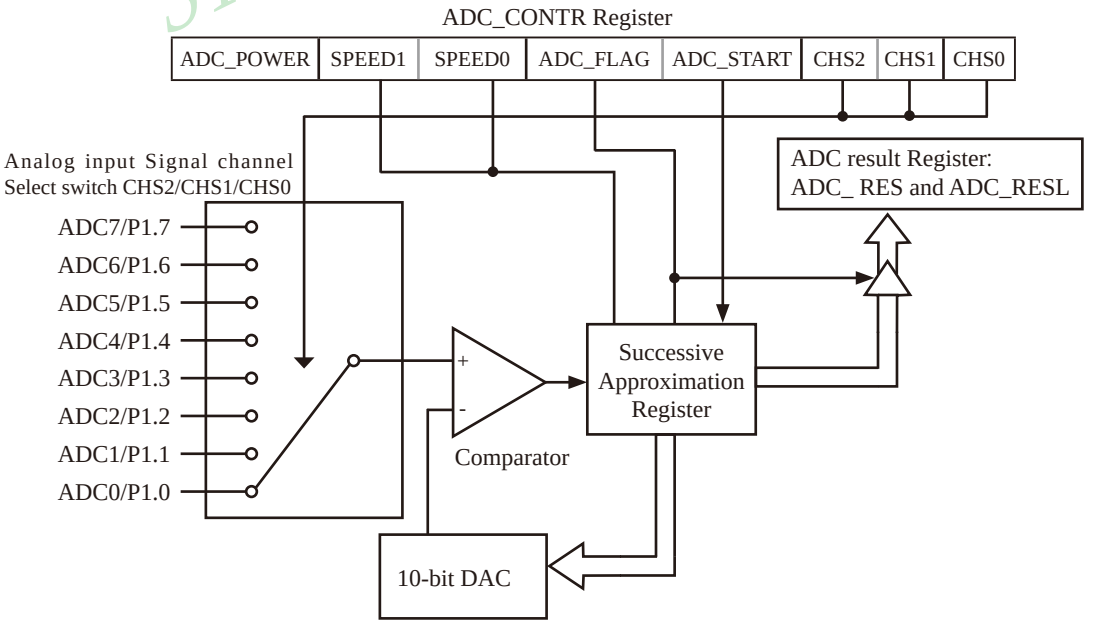

If CLK_DIV.5(PCON2.5)/ADRJ = 0, ADC result Register format is shown as below:

ADC_RES[7:0]

ADC_B9	ADC_B8	ADC_B7	ADC_B6	ADC_B5	ADC_B4	ADC_B3	ADC_B2

-	-	-	-	-	-	ADC_B1	ADC_B0

ADC_RESL[1:0]

If CLK_DIV.5(PCON2.5)/ADRJ = 1, ADC result Register format is shown as below:

ADC_RES[1:0]

-	-	-	-	-	-	ADC_B9	ADC_B8

ADC_B7	ADC_B6	ADC_B5	ADC_B4	ADC_B3	ADC_B2	ADC_B1	ADC_B0

ADC_RESL[7:0]

STC15 series MCU with A/D conversion function have 8-channel and 10-bit high-speed A/D converters whose speed is up to 300KHz (300 thousand times per second). the 8-channel ADC, which are on P1 port (P1.0-P1.7) , can be used as temperature detection, battery voltage detection, key scan, spectrum detection, etc. After power on reset, P1 ports are in weak pull-up mode. Users can set any one of 8 channels as A/D conversion through software. And those I/O ports not as ADC function can continue to be used as I/O ports.

STC15 series MCU ADC (A/D converter) structure is shown above.

The ADC on STC15 series is an 10-bit resolution, successive-approximation approach, medium-speed A/D converter. V_{REFP}/V_{REFM} is the positive/negative reference voltage input for internal voltage-scaling DAC use, the typical sink current on it is 600uA ~ 1mA. For STC15 series, these two references are internally tied to VCC and GND separately.

Conversion is invoked since ADC_STRAT(ADC_CONTR.3) bit is set. Before invoking conversion, ADC_POWER/ADC_CONTR.7 bit should be set first in order to turn on the power of analog front-end in ADC circuitry. Prior to ADC conversion, the desired I/O ports for analog inputs should be configured as input-only or open-drain mode first. The converter takes around a fourth cycles to sample analog input data and other three fourths cycles in successive-approximation steps. Total conversion time is controlled by two register bits – SPEED1 and SPEED0. Eight analog channels are available on P1 and only one of them is connected to to the comparator depending on the selection bits {CHS2,CHS1,CHS0}. When conversion is completed, the result will be saved onto {ADC_RES,ADC_RESL[1:0]} register if AUXR1.2(ADRJ) =0 or saved onto {ADC_RES[1:0],ADC_RESL} if ADRJ=1 . After the result are completed and saved, ADC_FLAG is also set. ADC_FLAG associated with its enable register IE.5(EADC). ADC_FLAG should be cleared in software. The ADC interrupt service routine vectors to 2Bh . When the chip enters idle mode or power-down mode, the power of ADC is gated off by hardware.

When ADRJ = 0, if user need 10-bit conversion result, calculating the result according to the following formula:

$$\text{10-bit A/D Conversion Result:(ADC_RES[7:0], ADC_RESL[1:0])} = 1024 \times \frac{Vin}{Vcc}$$

STC MCU Limited.

When ADRJ = 0, if user need 8-bit conversion result, calculating the result according to the following formula:

$$\text{8-bit A/D Conversion Result:(ADC_RES[7:0])} = 256 \times \frac{Vin}{Vcc}$$

When ADRJ = 1, if user need 10-bit conversion result, calculating the result according to the following formula:

$$\text{10-bit A/D Conversion Result:(ADC_RES[1:0], ADC_RESL[7:0])} = 1024 \times \frac{Vin}{Vcc}$$

In the above formulas, Vin stand for analog input channel voltage, Vcc stand for actual operation voltage.

10.2 Registers for ADC

Mnemonic	Description	Address	bit address and Symbol MSB LSB								Reset value
P1ASF	P1 Analog Function Configure register	9DH	P17ASF	P16ASF	P15ASF	P14ASF	P13ASF	P12ASF	P11ASF	P10ASF	0000 0000B
ADC_CONTR	ADC Control Register	BCH	ADC_POWER	SPEED1	SPEED0	ADC_FLAG	ADC_START	CHS2	CHS1	CHS0	0000 0000B
ADC_RES	ADC Result high	BDH									0000 0000B
ADC_RESL	ADC Result low	BEH									0000 0000B
CLK_DIV PCON2	Clock Division Register	97H	MCKO_S1	MCKO_S0	ADRJ	Tx_Rx	Tx2_Rx2	CLKS2	CLKS1	CLKS0	0000 x000B
IE	Interrupt Enable	A8H	EA	ELVD	EADC	ES	ET1	EX1	ET0	EX0	0000 0000B
IP	Interrupt Priority Low	B8H	PPCA	PLVD	PADC	PS	PT1	PX1	PT0	PX0	0000 0000B

1. P1 Analog Function Configure register: P1ASF (Non bit-addressable)

SFR name	Address	bit	B7	B6	B5	B4	B3	B2	B1	B0
P1ASF	9DH	name	P17ASF	P16ASF	P15ASF	P14ASF	P13ASF	P12ASF	P11ASF	P10ASF

P1xASF
0 : = Keep P1.x as general-purpose I/O function.
1 : = Set P1.x as ADC input channel-x

2. ADC control register: ADC_CONTR (Non bit-addressable)

SFR name	Address	bit	B7	B6	B5	B4	B3	B2	B1	B0
ADC_CONTR	BCH	name	ADC_POWER	SPEED1	SPEED0	ADC_FLAG	ADC_START	CHS2	CHS1	CHS0

When operating to ADC_CONTR register, "MOV" should be used, while "AND" and "OR" don not be recommended to use

ADC_POWER : When clear shut down the power of ADC block. When set turn on the power of ADC block.

SPEED1, SPEED0 : Conversion speed selection.

SPEED1	SPEED0	Times needed by an A/D Coversion
0	0	540 clock cycles are needed for a conversion.
0	1	360 clock cycles are needed for a conversion.
1	0	180 clock cycles are needed for a conversion.
1	1	90 clock cycles are needed for a conversion. When the CPU operation frequency is 27MHz, the speed of ADC is about 300KHz (=27MHz / 90).

The clock source used by ADC block of STC15 series MCU is On-chip R/C clock which is not divided by Clock divider register CLK_DIV.

ADC_FLAG : ADC interrupt flag.It will be set by the device after the device has finished a conversion, and should be cleared by the user's software.

ADC_STRAT : ADC start bit, which enable ADC conversion.It will automatically cleared by the device after the device has finished the conversion.

CHS2 ~ CHS0 : Used to select one analog input source from 8 channels.

CHS2	CHS1	CHS0	Source
0	0	0	P1.0 (default) as the A/D channel input
0	0	1	P1.1 as the A/D channel input
0	1	0	P1.2 as the A/D channel input
0	1	1	P1.3 as the A/D channel input
1	0	0	P1.4 as the A/D channel input
1	0	1	P1.5 as the A/D channel input
1	1	0	P1.6 as the A/D channel input
1	1	1	P1.7 as the A/D channel input

STC MCU Limited.

Note : The corresponding bits in P1ASF should be configured correctly before starting A/D conversion. The sepecific P1ASF bits should be set corresponding with the desired channels.

Because it will by delayed 4 CPU clocks after the instruction which set ADC_CONTR register has been executed, Four "NOP" instructions should be added after setting ADC_CONTR register. See the following code:

```
MOV     ADC_CONTR,      #DATA
NOP
NOP
NOP
NOP
MOV     A,          ADC_CONTR
                        ;Only delayed 4 clocks, can the ADC_CONTR be read correctly.
```

3. ADC Result Arrangement Register Bit ----ADRJ

CLK_DIV : Clock Division Register (Non bit-addressable)

Mnemonic	Add	Name	B7	B6	B5	B4	B3	B2	B1	B0	Reset Value
CLK_DIV (PCON2)	97H	Clock Division Register	MCKO_S1	MCKO_S0	ADRJ	Tx_Rx	Tx2_Rx2	CLKS2	CLKS1	CLKS0	0000 x000B

ADRJ : ADC result adjust bit

0 : The 10-bit conversion result of ADC is arranged as {ADC_RES[7:0], ADC_RESL[1:0]}.

1 : The 10-bit conversion result is right-justified, {ADC_RES[1:0], ADC_RESL[7:0]}.

4. ADC result register: ADC_RES and ADC_RESL

ADC_RES and ADC_RESL are used to save the ADC result, their format as shown below:

Mnemonic	Add	Name	B7	B6	B5	B4	B3	B2	B1	B0
ADC_RES	BDH	ADC result register high								
ADC_RESL	BEH	ADC result register low								
CLK_DIV (PCON2)	97H	Clock Division Register	MCKO_S1	MCKO_S0	ADRJ	Tx_Rx	Tx2_Rx2	CLKS2	CLKS1	CLKS0

The ADC_RES and ADC_RESL are the final result from the ADC. ADRJ/CLK_DIV.5 is the control bit of ADC result arrangement in ADC result registers (ADC_RES, ADC_RESL).

If ADRJ=0, The higher 8 bits of 10 bits ADC result are arranged in ADC_RES, and the lower 2 bits are in ADC_RESL. See the following table.

Mnemonic	Add	Name	B7	B6	B5	B4	B3	B2	B1	B0
ADC_RES	BDH	ADC result register high	ADC_RES9	ADC_RES8	ADC_RES7	ADC_RES6	ADC_RES5	ADC_RES4	ADC_RES3	ADC_RES2
ADC_RESL	BEH	ADC result register low	-	-	-	-	-	-	ADC_RES0	ADC_RES1
CLK_DIV (PCON2)	97H	Clock Division Register			ADRJ=0					

If user need the full 10-bit conversion result, calculating the result according to the following formula:

$$\text{10-bit A/D Conversion Result:(ADC_RES[7:0], ADC_RESL[1:0])} = 1024 \times \frac{Vin}{Vcc}$$

If user only need 8-bit conversion result, calculating the result according to the following formula:

$$\text{8-bit A/D Conversion Result:(ADC_RES[7:0])} = 256 \times \frac{Vin}{Vcc}$$

In the above formulas, Vin stand for analog input channel voltage, Vcc stand for actual operation voltage.

STC MCU Limited.

If ADRJ=1, The higher 2 bits of 10 bits ADC result are arranged in ADC_RES, and the lower 8 bits are in ADC_RESL. See the following table.

Mnemonic	Add	Name	B7	B6	B5	B4	B3	B2	B1	B0
ADC_RES	BDH	ADC result register high							ADC_RES9	ADC_RES8
ADC_RESL	BEH	ADC result register low	ADC_RES7	ADC_RES6	ADC_RES5	ADC_RES4	ADC_RES3	ADC_RES2	ADC_RES0	ADC_RES1
CLK_DIV (PCON2)	97H	Clock Division Register						ADRJ=1		

Calculating the full 10-bit conversion result according to the following formula:

$$\text{10-bit A/D Conversion Result:(ADC_RES[1:0], ADC_RESL[7:0])} = 1024 \times \frac{Vin}{Vcc}$$

In the above formulas, Vin stand for analog input channel voltage, Vcc stand for actual operation voltage.

STC MCU Limited.

5. Registers bits related with ADC Interrupt : EA, EADC and PADC

IE: Interrupt Enable Rsgister (Bit-addressable)

SFR name	Address	bit	B7	B6	B5	B4	B3	B2	B1	B0
IE	A8H	name	EA	ELVD	EADC	ES	ET1	EX1	ET0	EX0

EA : disables all interrupts.
If EA = 0,no interrupt will be acknowledged.
If EA = 1, each interrupt source is individually enabled or disabled by setting or clearing its enable bit.

EADC: ADC interrupt enable bit.
If EADC = 0, ADC interrupt would be diabled.
If EADC = 1, ADC interrupt would be enabled.

IP : Interrupt Priority Register (Non bit-addressable)

SFR name	Address	bit	B7	B6	B5	B4	B3	B2	B1	B0
IP	B8H	name	PPCA	PLVD	PADC	PS	PT1	PX1	PT0	PX0

PADC : ADC interrupt priority control bit.
if PADC=0, ADC interrupt is assigned lowest priority (priority 0).
if PADC=1, ADC interrupt is assigned highest priority (priority 1).

10.3 ADC Typical Application Circuit

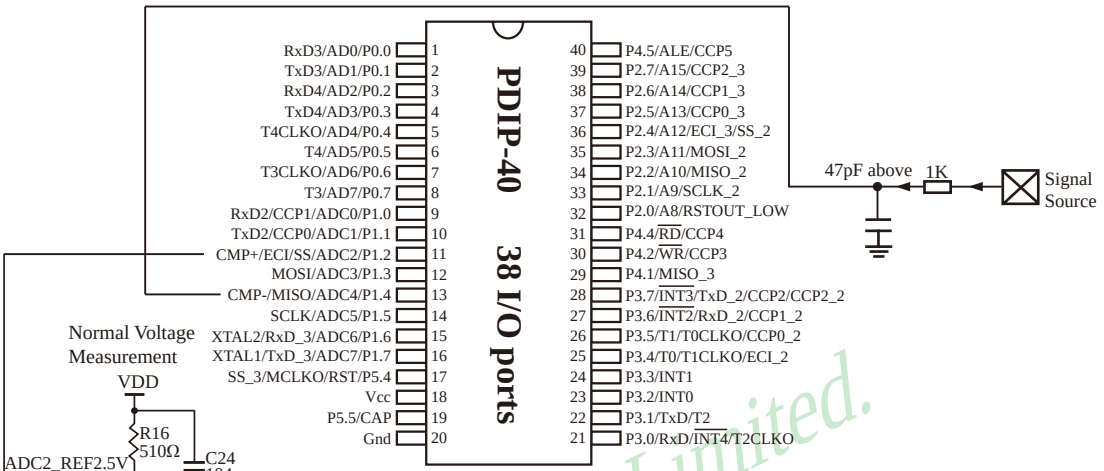

A/D Converter on P1 ports, P1.0 - P1.7

8 channels of A/D Converter are on P1. P1.x/ADCx means P1.x can be used as A/D conversion channel.

Normal Reference Voltage Source TL431B

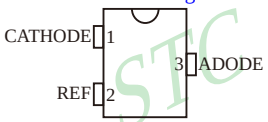

Package: SOT23-3; Price: RMB￥0.15~0.3

The symbol of normal reference voltage source TL431B

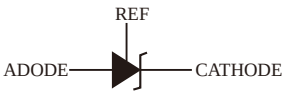

STC MCU Limited.

10.4 Application Circuit using A/D Conversion to Scan Key

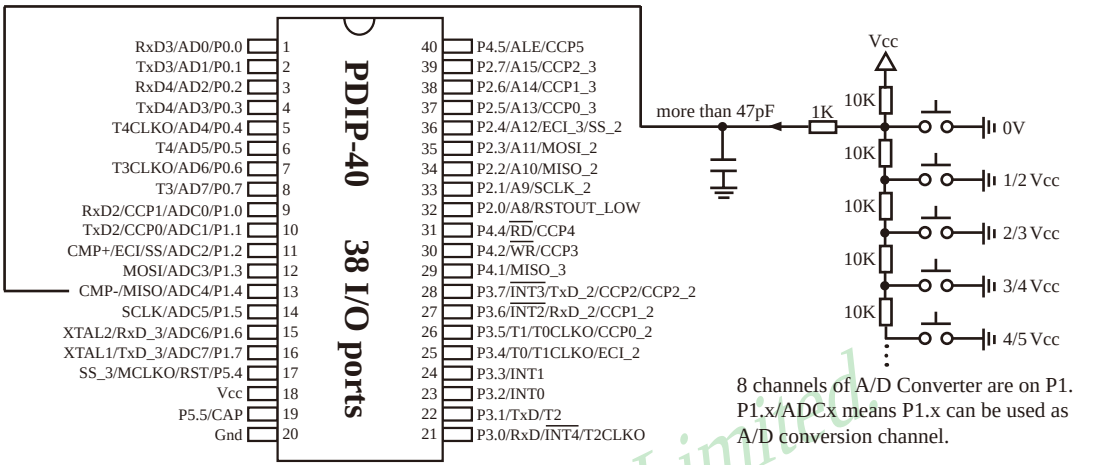

A/D Converter on P1 ports, P1.0 - P1.7

8 channels of A/D Converter are on P1. P1.x/ADCx means P1.x can be used as A/D conversion channel.

16 ADC keyboards

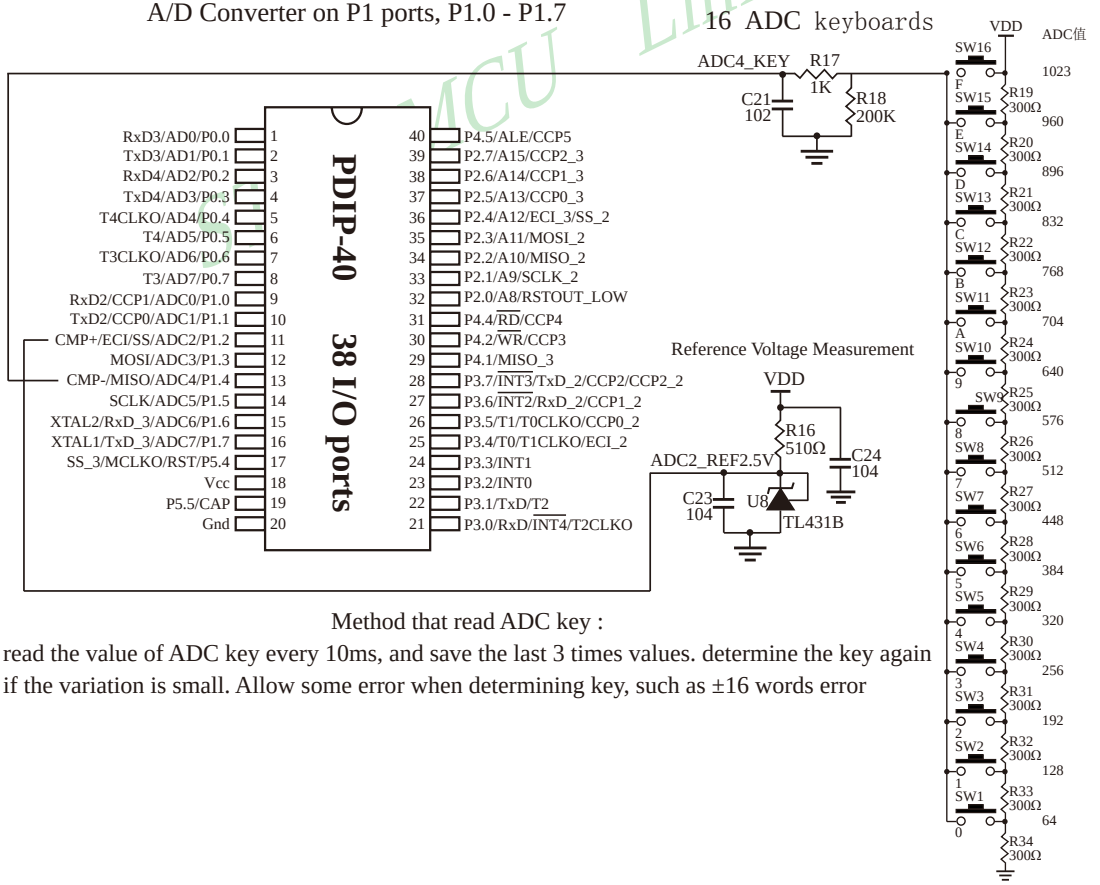

Method that read ADC key :

read the value of ADC key every 10ms, and save the last 3 times values. determine the key again if the variation is small. Allow some error when determining key, such as ±16 words error

STC MCU Limited.

10.5 ADC Reference Voltage Source

STC15 series ADC reference voltage is from MCU power supply voltage directly, so it can work without an external reference voltage source. If the required precision is relatively high, then you maybe using a stable reference voltage source, in order to calculate the operating voltage VCC, then calculate the ADC exact value. For example, you can connect a 1.25V(or 1.00V, ect. …) reference voltage source to ADC channel 2, according to the conversion result, you can get the actual VCC voltage, thus you can calculate other 7 channels ADC results. (Vcc is constant in short time)

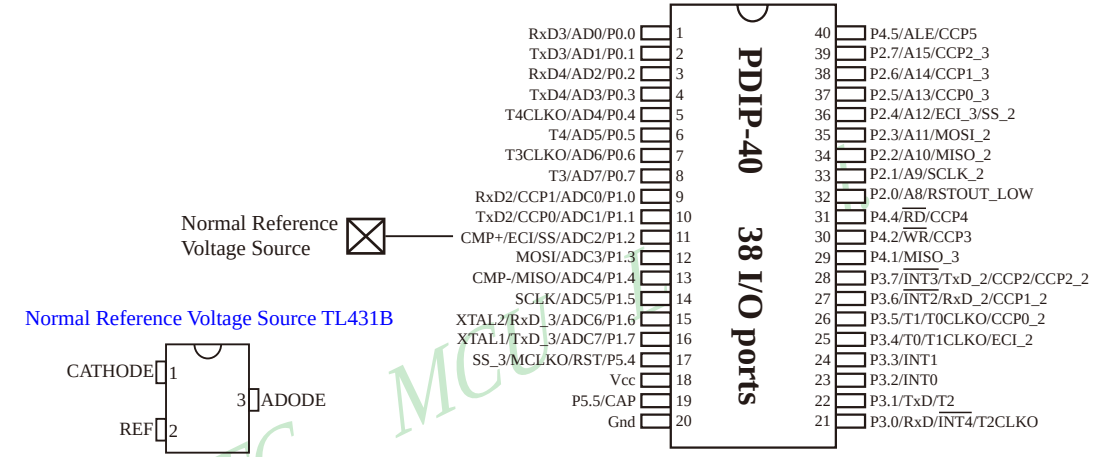

Normal Reference Voltage Source TL431B

The symbol of normal reference voltage source TL431B

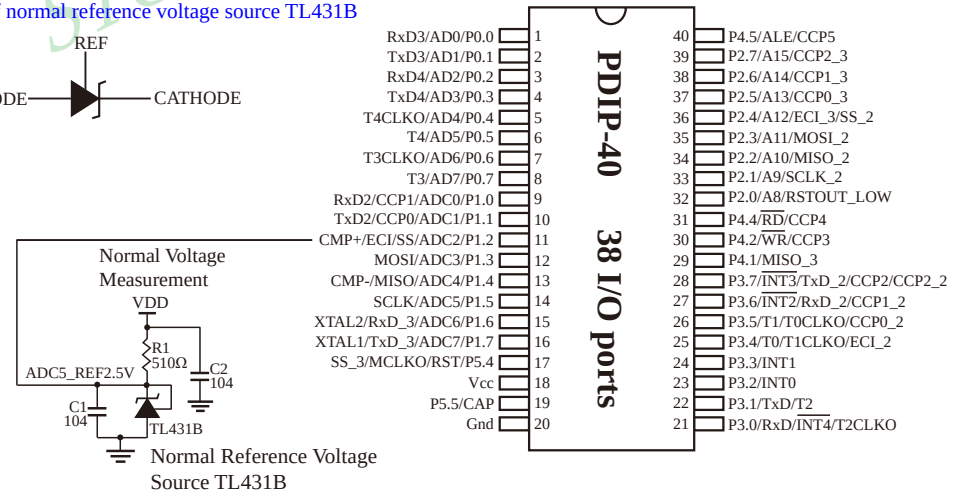

10.6 ADC Demo Program (C and ASM)

10.6.1 Demo Program (Demonstrate in ADC Interrupt Mode)

There are two example procedures using interrupts to demonstrate A/D conversion, one written in C langugage and the other in assembly language.

1. C Program Listing

```
/*---------------------------------------------------------------------------------------------------*/
/* --- STC MCU Limited. ----------------------------------------------------------------------------*/
/* --- Exam Program of ADC -------------------------------------------------------------------------*/
/* --- Mobile: (86)13922805190 ---------------------------------------------------------------------*/
/* --- Fax: 86-755-82905966 ------------------------------------------------------------------------*/
/* --- Tel: 86-755-82948412 ------------------------------------------------------------------------*/
/* --- Web: www.STCMCU.com -------------------------------------------------------------------------*/
/* If you want to use the program or the program referenced in the ----------------------------*/
/* article, please specify in which data and procedures from STC -----------------------------*/
/*---- In Keil C development environment, select the Intel 8052 to compiling ------------------*/
/*---- And only contain < reg51.h > as header file ---------------------------------------------*/
/*---------------------------------------------------------------------------------------------------*/

//suppose the frequency of test chip is 18.432MHz

#include "reg51.h"
#include "intrins.h"

#define FOSC 18432000L
#define BAUD 9600

typedef unsigned char BYTE;
typedef unsigned int WORD;

#define URMD 0 //0: select T2 as UART1 baud-rate generator
               //1: select T1 as UART1 baud-rate generator(T1 as 16-bit auto-relaod timer/counter)
               //2: select T1 as UART1 baud-rate generator (T1 as 8-bit auto-relaod timer/counter)


sfr T2H = 0xd6;
sfr T2L = 0xd7;

sfr AUXR = 0x8e; //Auxiliary register

/*Declare SFR associated with the ADC */
sfr ADC_CONTR = 0xBC; //ADC control register
sfr ADC_RES = 0xBD; //ADC hight 8-bit result register
sfr ADC_LOW2 = 0xBE; //ADC low 2-bit result register
sfr P1ASF = 0x9D; //P1 secondary function control register
```

STC MCU Limited.

```
/*Define ADC operation const for ADC_CONTR*/
 #define  ADC_POWER    0x80            //ADC power control bit
 #define  ADC_FLAG     0x10            //ADC complete flag
 #define  ADC_START    0x08            //ADC start control bit
 #define  ADC_SPEEDLL  0x00            //540 clocks
 #define  ADC_SPEEDL   0x20            //360 clocks
 #define  ADC_SPEEDH   0x40            //180 clocks
 #define  ADC_SPEEDHH  0x60            //90 clocks

void    InitUart();
void    SendData(BYTE dat);
void    Delay(WORD n);
void    InitADC();

BYTE    ch = 0;                       //ADC channel NO.

void main()
{
        InitUart();                   //Init UART, use to show ADC result
        InitADC();                    //Init ADC sfr
        IE = 0xa0;                    //Enable ADC interrupt and Open master interrupt switch
                                      //Start A/D conversion
        while (1);
}
/*----------------------------
ADC interrupt service routine
----------------------------*/
void adc_isr() interrupt 5 using 1
{
        ADC_CONTR &= !ADC_FLAG;       //Clear ADC interrupt flag

        SendData(ch);                 //Show Channel NO.
        SendData(ADC_RES);            //Get ADC high 8-bit result and Send to UART

        //if you want show 10-bit result, uncomment next line
        //    SendData(ADC_LOW2);     //Show ADC low 2-bit result

        if (++ch > 7) ch = 0;         //switch to next channel
        ADC_CONTR = ADC_POWER | ADC_SPEEDLL | ADC_START | ch;
}
/*----------------------------------
   Initial  ADC  sfr
----------------------------------*/
void InitADC( )
{
        P1ASF = 0xff;                         //Set all P1 as analog input port
        ADC_RES = 0;                          //Clear previous result
        ADC_CONTR = ADC_POWER | ADC_SPEEDLL | ADC_START | ch;
        Delay(2);                             //ADC power-on delay and Start A/D conversion
}
```

STC MCU Limited.

```
 /*---------------------------------
Initial UART
----------------------------*/
void InitUart()
{
        SCON    =       0x5a;                   //set UART1 as 8-bit UART with variable baud-rate
#if URMD == 0
        T2L     =       0xd8;                   //Set the preload value
        T2H     =       0xff;                   //115200 bps(65536-18432000/4/115200)
        AUXR    =       0x14;                   //T2 in 1T mode,  and run T2
        AUXR    |=       0x01;                  //select T2 as UART1 baud rate generator
#elif   URMD    ==      1
        AUXR    =       0x40;                   //T1 in 1T mode
        TMOD    =       0x00;                   //T1 in mode 0 (16-bit auto-reload timer/counter)
        TL1     =       0xd8;                   //Set the preload value
        TH1     =       0xff;                   //115200 bps(65536-18432000/4/115200)
        TR1     =       1;                      //run T1
#else
        TMOD    =       0x20;                   //T1 in mode 2 (8-bit auto-reload timer/counter)
        AUXR    =       0x40;                   //T1 in 1T mode
        TH1   =  TL1   =  0xfb;                 //115200 bps(256 - 18432000/32/115200)
        TR1     =       1;
#endif
}
 /*-------------------------------------
  Send one byte data to PC
  Input: dat (UART data)
  Output:-
 -------------------------------------*/
 void SendData(BYTE dat)
 {
        while (!TI);                            //Wait for the previous data is sent
        TI = 0;                                 //Clear TI flag
        SBUF = dat;                             //Send current data
  }
/*----------------------------
Software delay function
----------------------------*/
void Delay(WORD n)
{
        WORD x;

        while (n--)
        {
                x = 5000;
                while (x--);
        }
}
```

STC MCU Limited.

2. Assembler Listing

```
/*---------------------------------------------------------------------------------------------------*/
/* --- STC MCU  Limited. ---------------------------------------------------------------------------*/
/* --- Exam Program EEPROM/IAP ---------------------------------------------------------------------*/
/* --- Mobile: (86)13922805190 ---------------------------------------------------------------------*/
/* --- Fax: 86-755-82905966 ------------------------------------------------------------------------*/
/* --- Tel: 86-755-82948412 ------------------------------------------------------------------------*/
/* --- Web: www.STCMCU.com -------------------------------------------------------------------------*/
/* If you want to use the program or the program referenced in the  ----------------------------*/
/* article, please specify in which data and procedures from STC    ----------------------------*/
/*---- In Keil C development environment, select the Intel 8052 to compiling ----------------*/
/*----  And only contain < reg51.h > as header file ------------------------------------------*/
/*---------------------------------------------------------------------------------------------------*/

//suppose the frequency of test chip is 18.432MHz

#define   URMD   0        //0: select T2 as UART1 baud-rate generator
                          //1: select T1 as UART1 baud-rate generator(T1 as 16-bit auto-relaod timer/counter)
                          //2: select T1 as UART1 baud-rate generator (T1 as 8-bit auto-relaod timer/counter)

T2H     DATA    0D6H
T2L     DATA    0D7H
AUXR    DATA    08EH            //Auxiliary register

;/*Declare SFR associated with the ADC */
ADC_CONTR       EQU     0BCH            ;ADC control registe
ADC_RES         EQU     0BDH            ;ADC high 8-bit result register
ADC_LOW2        EQU     0BEH            ;ADC low 2-bit result register
P1ASF           EQU     09DH            ;P1 secondary function control register

 ;/*Define ADC operation const for ADC_CONTR*/
ADC_POWER       EQU     80H             ;ADC  power control bit
ADC_FLAG        EQU     10H             ;ADC complete flag
ADC_START       EQU     08H             ;ADC start control bit
ADC_SPEEDLL     EQU     00H             ;540 clocks
ADC_SPEEDL      EQU     20H             ;360 clocks
ADC_SPEEDH      EQU     40H             ;180 clocks
ADC_SPEEDHH     EQU     60H             ;90 clocks

ADCCH           DATA    20H             ;ADC channel NO.

;----------------------------------------
        ORG     0000H
        LJMP    MAIN

        ORG     002BH
        LJMP    ADC_ISR
;----------------------------------------
```

STC MCU Limited.

```
        ORG     0100H
MAIN:
        MOV     SP,     #3FH
        MOV     ADCCH,          #0
        LCALL   INIT_UART                       ;Init UART, use to show ADC result
        LCALL   INIT_ADC                        ;Init ADC sfr
        MOV     IE,     #0A0H                   ;Enable ADC interrupt
                                                ;and Open master interrupt switch
        SJMP    $
;/*----------------------------
;ADC interrupt service routine
;----------------------------*/
ADC_ISR:
        PUSH    ACC
        PUSH    PSW

        ANL     ADC_CONTR,      #NOT ADC_FLAG   ;Clear ADC interrupt flag
        MOV     A,              ADCCH
        LCALL   SEND_DATA                       ;Send channel NO.
        MOV     A,              ADC_    RES     ;Get ADC high 8-bit result
        LCALL   SEND_DATA                       ;Send to UART

;       MOV     A,              ADC_LOW2        ;Get ADC low 2-bit result
;       LCALL   SEND_DATA                       ;Send to UART

        INC     ADCCH
        MOV     A,      ADCCH
        ANL     A,      #07H
        MOV     ADCCH, A
        ORL     A,      #ADC_POWER | ADC_SPEEDLL | ADC_START
        MOV     ADC_CONTR,      A               ;ADC power-on delay
                                                ;and re-start A/D conversion
        POP     PSW
        POP     ACC
        RETI

;/*----------------------------
;Initial ADC sfr
;----------------------------*/
INIT_ADC:
        MOV     P1ASF,          #0FFH           ;Set all P1 as analog input port
        MOV     ADC_RES,        #0              ;Clear previous result
        MOV     A,              ADCCH
        ORL     A,              #ADC_POWER | ADC_SPEEDLL | ADC_START
        MOV     ADC_CONTR,      A               ;ADC power-on delay
                                                ;and Start A/D conversion
        MOV     A,              #2
        LCALL   DELAY
        RET
```

STC MCU Limited.

```
;/*---------------------------
;Initial UART
;---------------------------*/
INIT_UART:
        MOV     SCON,   #5AH            ;set UART1 as 8-bit UART with variable baud-rate
#if     URMD    ==      0
        MOV     T2L,    #0D8H           ;Set the preload value (65536-18432000/4/115200)
        MOV     T2H,    #0FFH
        MOV     AUXR,   #14H            ;T2 in 1T mode,  and run T2
        ORL     AUXR,   #01H            ;select T2 as UART1 baud rate generator
#elif URMD == 1
        MOV     AUXR,   #40H            ;T1 in 1T mode
        MOV     TMOD,   #00H            ;T1 in mode 0 (16-bit auto-reload timer/counter)
        MOV     TL1,    #0D8H           ;Set the preload value(65536-18432000/4/115200)
        MOV     TH1,    #0FFH
        SETB    TR1                     ;run T1
#else
        MOV     TMOD,   #20H            ;T1 in mode 2 (8-bit auto-reload timer/counter)
        MOV     AUXR,   #40H            ;T1 in 1T mode
        MOV     TL1,    #0FBH           ;115200 bps(256 - 18432000/32/115200)
        MOV     TH1,    #0FBH
        SETB    TR1
#endif
        RET

;/*-------------------------------------
;Send one byte data to PC
;Input: ACC (UART data)
;Output:-
;-------------------------------------*/
SEND_DATA:
        JNB     TI,     $               ;Wait for the previous data is sent
        CLR     TI                      ;Clear TI flag
        MOV     SBUF,   A               ;Send current data
        RET
;/*---------------------------
;Software delay function
;---------------------------*/
DELAY:
        MOV     R2,     A
        CLR     A
        MOV     R0,     A
        MOV     R1,     A
DELAY1:
        DJNZ    R0,     DELAY1
        DJNZ    R1,     DELAY1
        DJNZ    R2,     DELAY1
        RET
        END
```

STC MCU Limited.

10.6.2 Demo Program (Demonstrate in Polling Mode)

There are two example procedures using polling mode to demonstrate A/D conversion, one written in C langugage and the other in assembly language.

1. C Program Listing

```
/*---------------------------------------------------------------------------------------------------*/
/* --- STC MCU  Limited. ---------------------------------------------------------------------------*/
/* --- Exam Program of ADC -------------------------------------------------------------------------*/
/* --- Mobile: (86)13922805190 ---------------------------------------------------------------------*/
/* --- Fax: 86-755-82905966 ------------------------------------------------------------------------*/
/* --- Tel: 86-755-82948412 ------------------------------------------------------------------------*/
/* --- Web: www.STCMCU.com -------------------------------------------------------------------------*/
/* If you want to use the program or the program referenced in the  ----------------------------*/
/* article, please specify in which data and procedures from STC    ----------------------------*/
/*---- In Keil C development environment, select the Intel 8052 to compiling ------------------*/
/*----  And only contain < reg51.h > as header file ---------------------------------------------*/
/*---------------------------------------------------------------------------------------------------*/

//suppose the frequency of test chip is 18.432MHz


#include "reg51.h"
#include "intrins.h"

#define   FOSC   18432000L
#define   BAUD   9600

typedef unsigned char       BYTE;
typedef unsigned int        WORD;

#define   URMD   0          //0: select T2 as UART1 baud-rate generator
                            //1: select T1 as UART1 baud-rate generator(T1 as 16-bit auto-relaod timer/counter)
                            //2: select T1 as UART1 baud-rate generator (T1 as 8-bit auto-relaod timer/counter)


sfr       T2H     =         0xd6;
sfr       T2L     =         0xd7;

sfr       AUXR    =         0x8e;                 //Auxiliary register

/*Declare SFR associated with the ADC */
sfr       ADC_CONTR     =   0xBC;                 //ADC control register
sfr       ADC_RES       =   0xBD;                 //ADC hight 8-bit result register
sfr       ADC_LOW2      =   0xBE;                 //ADC low 2-bit result register
sfr       P1ASF         =   0x9D;                 //P1 secondary function control register
```

STC MCU Limited.

```
/*Define ADC operation const for ADC_CONTR*/
 #define  ADC_POWER    0x80          //ADC power control bit
 #define  ADC_FLAG     0x10          //ADC complete flag
 #define  ADC_START    0x08          //ADC start control bit
 #define  ADC_SPEEDLL  0x00          //540 clocks
 #define  ADC_SPEEDL   0x20          //360 clocks
 #define  ADC_SPEEDH   0x40          //180 clocks
 #define  ADC_SPEEDHH  0x60          //90 clocks

void      InitUart();
void InitADC();
void SendData(BYTE dat);
BYTE GetADCResult(BYTE ch);
void Delay(WORD n);
void ShowResult(BYTE ch);

void main()
{
        InitUart();                             //Init UART, use to show ADC result
        InitADC();                              //Init ADC sfr
        while (1)
        {
                ShowResult(0);                  //Show Channel0
                ShowResult(1);                  //Show Channel1
                ShowResult(2);                  //Show Channel2
                ShowResult(3);                  //Show Channel3
                ShowResult(4);                  //Show Channel4
                ShowResult(5);                  //Show Channel5
                ShowResult(6);                  //Show Channel6
                ShowResult(7);                  //Show Channel7
        }
}

/*---------------------------------------------------------
Send ADC result to UART
-----------------------------------------------------------------*/
void ShowResult(BYTE ch)
{
        SendData(ch);                           //Show Channel NO.
        SendData(GetADCResult(ch));             //Show ADC high 8-bit result

        //if you want show 10-bit result, uncomment next line
        //    SendData(ADC_LOW2);               //Show ADC low 2-bit result
}
```

STC MCU Limited.

```
/*---------------------------------------------------------
Get ADC result
-----------------------------------------------------------*/
BYTE GetADCResult(BYTE ch)
{
        ADC_CONTR = ADC_POWER | ADC_SPEEDLL | ch | ADC_START;
        _nop_();                                //Must wait before inquiry
        _nop_();
        _nop_();
        _nop_();
        while (!(ADC_CONTR & ADC_FLAG));        //Wait complete flag
        ADC_CONTR &= ~ADC_FLAG;                 //Close ADC

        return ADC_RES;                         //Return ADC result
}

 /*-------------------------------
Initial UART
--------------------------*/
void InitUart()
{
        SCON    =       0x5a;                   //set UART1 as 8-bit UART with variable baud-rate
#if URMD == 0
        T2L     =       0xd8;                   //Set the preload value
        T2H     =       0xff;                   //115200 bps(65536-18432000/4/115200)
        AUXR    =       0x14;                   //T2 in 1T mode,  and run T2
        AUXR    |=       0x01;                  //select T2 as UART1 baud rate generator
#elif   URMD    ==      1
        AUXR    =       0x40;                   //T1 in 1T mode
        TMOD    =       0x00;                   //T1 in mode 0 (16-bit auto-reload timer/counter)
        TL1     =       0xd8;                   //Set the preload value
        TH1     =       0xff;                   //115200 bps(65536-18432000/4/115200)
        TR1     =       1;                      //run T1
#else
        TMOD    =       0x20;                   //T1 in mode 2 (8-bit auto-reload timer/counter)
        AUXR    =       0x40;                   //T1 in 1T mode
        TH1   =  TL1   =  0xfb;                 //115200 bps(256 - 18432000/32/115200)
        TR1     =       1;
#endif
}

/*---------------------------------------------------------
Initial ADC sfr
-----------------------------------------------------------*/
```

STC MCU Limited.

```
void InitADC()
{
	P1ASF = 0xff;                                   //Open 8 channels ADC function
	ADC_RES = 0;                                    //Clear previous result
	ADC_CONTR = ADC_POWER | ADC_SPEEDLL;
	Delay(2);                                       //ADC power-on and delay
}

 /*-------------------------------------------------------
Send one byte data to PC
Input: dat (UART data)
Output:-
-------------------------------------------------------*/
void SendData(BYTE dat)
{
	while (!TI);                                    //Wait for the previous data is sent
	TI = 0;                                         //Clear TI flag
	SBUF = dat;                                     //Send current data
}

/*-------------------------------------------------------
Software delay function
-------------------------------------------------------*/
void Delay(WORD n)
{
	WORD x;
	while (n--)
	{
		x = 5000;
		while (x--);
	}
}
```

STC MCU Limited.

2. Assembler Listing

```
/*---------------------------------------------------------------------------------------------------*/
/* --- STC MCU  Limited. ---------------------------------------------------------------------------*/
/* --- Exam Program EEPROM/IAP ---------------------------------------------------------------------*/
/* --- Mobile: (86)13922805190 ---------------------------------------------------------------------*/
/* --- Fax: 86-755-82905966 ------------------------------------------------------------------------*/
/* --- Tel: 86-755-82948412 ------------------------------------------------------------------------*/
/* --- Web: www.STCMCU.com -------------------------------------------------------------------------*/
/* If you want to use the program or the program referenced in the  ----------------------------*/
/* article, please specify in which data and procedures from STC    ----------------------------*/
/*---- In Keil C development environment, select the Intel 8052 to compiling ----------------*/
/*----  And only contain < reg51.h > as header file ------------------------------------------*/
/*---------------------------------------------------------------------------------------------------*/

//suppose the frequency of test chip is 18.432MHz

#define   URMD   0        //0: select T2 as UART1 baud-rate generator
                          //1: select T1 as UART1 baud-rate generator(T1 as 16-bit auto-relaod timer/counter)
                          //2: select T1 as UART1 baud-rate generator (T1 as 8-bit auto-relaod timer/counter)

T2H     DATA    0D6H
T2L     DATA    0D7H
AUXR    DATA    08EH            //Auxiliary register

;/*Declare SFR associated with the ADC */
ADC_CONTR       EQU     0BCH            ;ADC control registe
ADC_RES         EQU     0BDH            ;ADC high 8-bit result register
ADC_LOW2        EQU     0BEH            ;ADC low 2-bit result register
P1ASF           EQU     09DH            ;P1 secondary function control register

 ;/*Define ADC operation const for ADC_CONTR*/
ADC_POWER       EQU     80H             ;ADC  power control bit
ADC_FLAG        EQU     10H             ;ADC complete flag
ADC_START       EQU     08H             ;ADC start control bit
ADC_SPEEDLL     EQU     00H             ;540 clocks
ADC_SPEEDL      EQU     20H             ;360 clocks
ADC_SPEEDH      EQU     40H             ;180 clocks
ADC_SPEEDHH     EQU     60H             ;90 clocks


;------------------------------------------
        ORG     0000H
        LJMP    MAIN

;------------------------------------------
        ORG     0100H
MAIN:
        LCALL   INIT_UART               ;Init UART, use to show ADC result
        LCALL   INIT_ADC                ;Init ADC sfr
```

STC MCU Limited.

```
;------------------------------
NEXT:
        MOV     A,      #0
        LCALL   SHOW_RESULT             ;Show channel 0 result
        MOV     A,      #1
        LCALL   SHOW_RESULT             ;Show channel 1 result
        MOV     A,      #2
        LCALL   SHOW_RESULT             ;Show channel 2 result
        MOV     A,      #3
        MOV     A,      #3
        LCALL   SHOW_RESULT             ;Show channel3 result
        MOV     A,      #4
        LCALL   SHOW_RESULT             ;Show channel4 result
        MOV     A,      #5
        LCALL   SHOW_RESULT             ;Show channel5 result
        MOV     A,      #6
        LCALL   SHOW_RESULT             ;Show channel6 result
        MOV     A,      #7
        LCALL   SHOW_RESULT             ;Show channel7 result

        SJMP    NEXT

;/*---------------------------------------------------------------
;Send ADC result to UART
;Input: ACC (ADC channel NO.)
;Output:-
;---------------------------------------------------------------*/
SHOW_RESULT:
        LCALL   SEND_DATA               ;Show Channel NO.
        LCALL   GET_ADC_RESULT          ;Get high 8-bit ADC result
        LCALL   SEND_DATA               ;Show result
;//if you want show 10-bit result, uncomment next 2 lines
;       MOV     A,      ADC_LOW2        ;Get low 2-bit ADC result
;       LCALL   SEND_DATA               ;Show result
        RET

;/*---------------------------------------------------------------
;Read ADC conversion result
;Input: ACC (ADC channel NO.)
;Output:ACC (ADC result)
;---------------------------------------------------------------*/
GET_ADC_RESULT:
        ORL     A,      #ADC_POWER | ADC_SPEEDLL | ADC_START
        MOV     ADC_CONTR,A             ;Start A/D conversion
        NOP                             ;Must wait before inquiry
```

STC MCU Limited.

```
        NOP
        NOP
        NOP
WAIT:
        MOV     A,ADC_CONTR                     ;Wait complete flag
        JNB     ACC.4,  WAIT                    ;ADC_FLAG(ADC_CONTR.4)
        ANL     ADC_CONTR,      #NOT ADC_FLAG   ;Clear ADC_FLAG
        MOV     A,      ADC_RES                 ;Return ADC result
        RET

;/*-------------------------------------------------------------------
;Initial ADC sfr
;-------------------------------------------------------------------*/
INIT_ADC:
        MOV     P1ASF,  #0FFH                   ;Open 8 channels ADC function
        MOV     ADC_RES,        #0              ;Clear previous result
        MOV     ADC_CONTR,      #ADC_POWER | ADC_SPEEDLL
        MOV     A,      #2                      ;ADC power-on and delay
        LCALL   DELAY
        RET
;/*---------------------------
;Initial UART
;---------------------------*/
INIT_UART:
        MOV     SCON,   #5AH            ;set UART1 as 8-bit UART with variable baud-rate
#if     URMD    ==      0
        MOV     T2L,    #0D8H           ;Set the preload value (65536-18432000/4/115200)
        MOV     T2H,    #0FFH
        MOV     AUXR,   #14H            ;T2 in 1T mode,  and run T2
        ORL     AUXR,   #01H            ;select T2 as UART1 baud rate generator
#elif URMD == 1
        MOV     AUXR,   #40H            ;T1 in 1T mode
        MOV     TMOD,   #00H            ;T1 in mode 0 (16-bit auto-reload timer/counter)
        MOV     TL1,    #0D8H           ;Set the preload value(65536-18432000/4/115200)
        MOV     TH1,    #0FFH
        SETB    TR1                     ;run T1
#else
        MOV     TMOD,   #20H            ;T1 in mode 2 (8-bit auto-reload timer/counter)
        MOV     AUXR,   #40H            ;T1 in 1T mode
        MOV     TL1,    #0FBH           ;115200 bps(256 - 18432000/32/115200)
        MOV     TH1,    #0FBH
        SETB    TR1
#endif
        RET
```

STC MCU Limited

```
;/*-------------------------------------------------------
;Send one byte data to PC
;Input: ACC (UART data)
;Output:-
;-------------------------------------------------------*/
SEND_DATA:
        NB      TI,     $               ;Wait for the previous data is sent
        CLR     TI                      ;Clear TI flag
        MOV     SBUF,   A               ;Send current data
        RET

;/*---------------------------
;Software delay function
;---------------------------*/
DELAY:
        MOV     R2,     A
        CLR     A
        MOV     R0,     A
        MOV     R1,     A
DELAY1:
        DJNZ    R0,     DELAY1
        DJNZ    R1,     DELAY1
        DJNZ    R2,     DELAY1
        RET

        END
```

STC MCU Limited.

10.7 Circuit Diagram using SPI to Extend 12-bit ADC(TLC2543)

TLC2543 is a high-precision 12-bit ADC Converter, the price of which is less than RMB 13 yuan

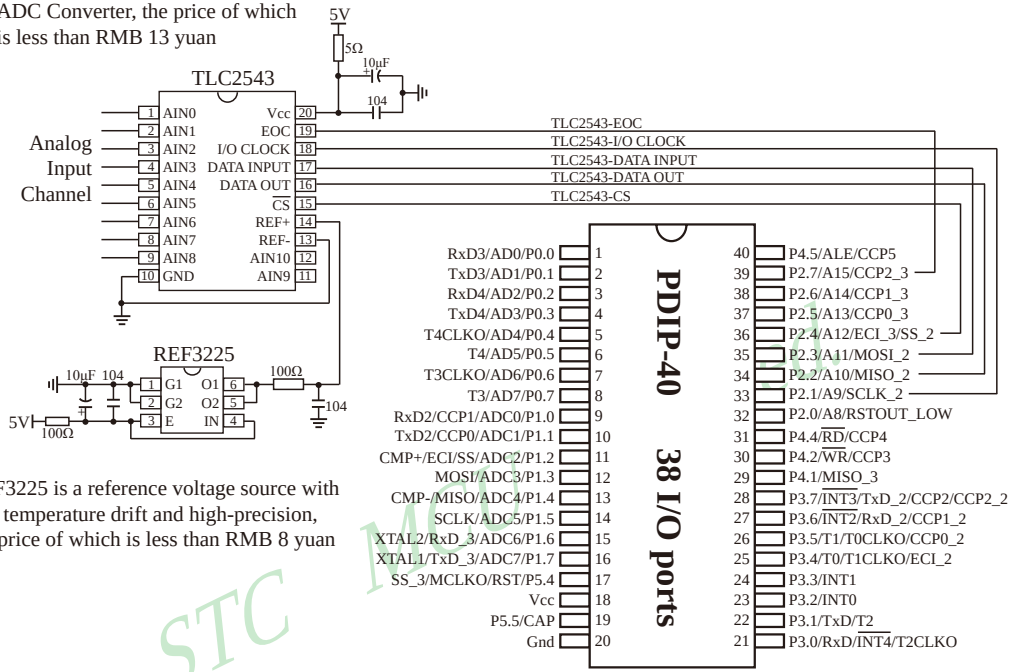

REF3225 is a reference voltage source with low temperature drift and high-precision, the price of which is less than RMB 8 yuan

STC MCU

Chapter 11 Application of CCP/PCA/PWM/DAC

STC15 series MCU have three 16-bit capture/compare modules associated with CCP/PCA/PWM. PCA stands for the Programmable Counter Array. Each of the modules can be programmed to operate in one of four modes: rising and/or falling edge capture(calculator of duty length for high/low pulse), software timer, high-speed pulse output, or pulse width modulator.

The special peripheral function of STC15 series MCU are summarized as shown in the following table.

Special peripheral Functiom / Type MCU	8-Channel 10-bit high-speed A/D Converter	CCP/PCA/PWM Function	a group of high-speed synchronous serial peripheral interface ----SPI
STC15W4K32S4 series	√	√	√
STC15F2K60S2 series	√	√	√
STC15W1K16S series			√
STC15W404S series			√
STC15W401AS series	√	√	√
STC15W201S series			
STC15F408AD series	√	√	√
STC15W10x series			
STC15F101W series			

STC MCU Limited.

√ means the corresponding series MCU have the corresponding peripheral function

For STC15W4K32S4, STC15F2K60S2 and STC15F408AD series MCU, thier CCP/PWM/PCA all can be switched in 3 groups of pins :

[CCP0/P1.1, CCP1/P1.0, CCP2/CCP2_2/P3.7];
[CCP0_2/P3.5, CCP1_2/P3.6, CCP2/CCP2_2/P3.7];
[CCP0_3/P2.5, CCP1_3/P2.6, CCP2_3/P2.7].

For STC15W401AS series MCU, thier CCP/PWM/PCA can be switched in 2 groups of pins :

[CCP0/P1.1, CCP1/P1.0, CCP2/CCP2_2/P3.7];
[CCP0_2/P3.5, CCP1_2/P3.6, CCP2/CCP2_2/P3.7].

STC15W1K16S, STC15W404S, STC15W201S, STC15W10x and STC15F/L101W series MCU have no CCP/PWM/PCA function.

11.1 Special Function Registers related with CCP/PCA/PWM

CCP/PCA/PWM SFRs table

Mnemonic	Description	Add	Bit address and Symbol								Reset Value
			B7	B6	B5	B4	B3	B2	B1	B0	
CCON	PCA Control Register	D8H	CF	CR	-	-	-	CCF2	CCF1	CCF0	00xx,xx00
CMOD	PCA Mode Register	D9H	CIDL	-	-	-	CPS2	CPS1	CPS0	ECF	0xxx,0000
CCAPM0	PCA Module 0 Mode Register	DAH	-	ECOM0	CAPP0	CAPN0	MAT0	TOG0	PWM0	ECCF0	x000,0000
CCAPM1	PCA Module 1 Mode Register	DBH	-	ECOM1	CAPP1	CAPN1	MAT1	TOG1	PWM1	ECCF1	x000,0000
CCAPM2	PCA Module 2 Mode Register	DCH	-	ECOM2	CAPP2	CAPN2	MAT2	TOG2	PWM2	ECCF2	x000,0000
CL	PCA Base Timer Low	E9H									0000,0000
CH	PCA Base Timer High	F9H									0000,0000
CCAP0L	PCA Module-0 Capture Register Low	EAH									0000,0000
CCAP0H	PCA Module-0 Capture Register High	FAH									0000,0000
CCAP1L	PCA Module-1 Capture Register Low	EBH									0000,0000
CCAP1H	PCA Module-1 Capture Register High	FBH									0000,0000
CCAP2L	PCA Module-2 Capture Register Low	ECH									0000,0000
CCAP2H	PCA Module-2 Capture Register High	FCH									0000,0000
PCA_PWM0	PCA PWM Mode Auxiliary Register 0	F2H	EBS0_1	EBS0_0	-	-	-	-	EPC0H	EPC0L	00xx,xx00
PCA_PWM1	PCA PWM Mode Auxiliary Register 1	F3H	EBS1_1	EBS1_0	-	-	-	-	EPC1H	EPC1L	00xx,xx00
PCA_PWM2	PCA PWM Mode Auxiliary Register 2	F4H	EBS2_1	EBS2_0	-	-	-	-	EPC2H	EPC2L	00xx,xx00
AUXR1 P_SW1	Auxiliary Register 1	A2H	S1_S1	S1_S0	CCP_S1	CCP_S0	SPI_S1	SPI_S0	-	DPS	0100,0000

STC MCU Limited.

1. PCA Operation Mode register: CMOD (Non bit-addressable)

SFR name	Address	bit	B7	B6	B5	B4	B3	B2	B1	B0
CMOD	D9H	name	CIDL	-	-	-	CPS2	CPS1	CPS0	ECF

CIDL : PCA Counter control bit in Idle mode.
If CIDL=0, the PCA counter will continue functioning during idle mode.
If CIDL=1, the PCA counter will be gated off during idle mode.

CPS2, CPS1, CPS0 : PCA Counter Pulse source Select bits.

CPS2	CPS1	CPS0	Select PCA/PWM clock source
0	0	0	0, System clock/12, SYSclk/12
0	0	1	1, System clock/2, SYSclk/2
0	1	0	2, Timer 0 overflow. PCA/PWM clock can up to SYSclk because Timer 0 can operate in 1T mode. Frequency-adjustable PWM output can be achieved by changing the Timer 0 overflow.
0	1	1	3, Exrenal clock from ECI/P1.2 (or P3.4 or P2.4) pin (max speed = SYSclk/2)
1	0	0	4, System clock, SYSclk
1	0	1	5, System clock/4, SYSclk/4
1	1	0	6, System clock/6, SYSclk/6
1	1	1	7, System clock/8, SYSclk/8

For example, If CPS2/CPS1/CPS0=1/0/0, PCA/PWM clock source is SYSclk.
If users need to select SYSclk/3 as PCA clock source, Timer 0 should be set to operate in 1T mode and generate an overflow every 3 counting pulse.

ECF : PCA Counter Overflow interrupt Enable bit.
ECF=0 disables CF bit in CCON to generate an interrupt.
ECF=1 enables CF bit in CCON to generate an interrupt.

STC MCU Limited.

2. PCA Control register : CCON (Non bit-addressable)

SFR name	Address	bit	B7	B6	B5	B4	B3	B2	B1	B0
CCON	D8H	name	CF	CR	-	-	-	CCF2	CCF1	CCF0

CF : PCA Counter overflow flag. Set by hardware when the counter rolls over. CF flags an interrupt if bit ECF in CMOD is set. CF may be set by either hardware or software but can only be cleared by software.

CR : PCA Counter Run control bit. Set by software to turn the PCA counter on. Must be cleared by software to turn the PCA counter off.

CCF1 : PCA Module 2 interrupt flag. Set by hardware when a match or capture from module 2 occurs. Must be cleared by software. A match means the value of the PCA counter equals the value of the Capture/ Compare register in module 2. A capture means a specific edge from CCP2 happens, so the Capture/ Compare register latches the value of the PCA counter, and the CCF2 is set.

CCF1 : PCA Module 1 interrupt flag. Set by hardware when a match or capture from module 1 occurs. Must be cleared by software. A match means the value of the PCA counter equals the value of the Capture/ Compare register in module 1. A capture means a specific edge from CCP1 happens, so the Capture/ Compare register latches the value of the PCA counter, and the CCF1 is set.

CCF0 : PCA Module 0 interrupt flag. Set by hardware when a match or capture from module 0 occurs. Must be cleared by software. A match means the value of the PCA counter equals the value of the Capture/ Compare register in module 0. A capture means a specific edge from CCP0 happens, so the Capture/ Compare register latches the value of the PCA counter, and the CCF0 is set.

STC MCU Limited.

3. PCA Capture/Compare register CCAPM0 and CCAPM1 and CCAPM2

Each module in the PCA has a special function register associated with it. These registers are CCAPMn, n=0 ~2. CCAPM0 for module 0, CCAPM1 for module 1 and CCAPM2 for module 2. The register contains the bits that control the mode in which each module will operate. The ECCFn bit enables the CCFn flag in the CCON SFR to generate an interrupt when a match or compare occurs in the associated module. PWMn enables the pulse width modulation mode. The TOGn bit when set causes the CCPn output associated with the module to toggle when there is a match between the PCA counter and the module's capture/compare register. The match bit(MATn) when set will cause the CCFn bit in the CCON register to be set when there is a match between the PCA counter and the module's capture/compare register.

The next two bits CAPNn and CAPPn determine the edge that a capture input will be active on. The CAPNn bit enables the negative edge, and the CAPPn bit enables the positive edge. If both bits are set, both edges will be enabled and a capture will occur for either transition. The bit ECOMn when set enables the comparator function.

Capture/Compare register of PCA module 0 : CCAPM0 (Non bit-addressable)

SFR name	Address	bit	B7	B6	B5	B4	B3	B2	B1	B0
CCAPM0	DAH	name	-	ECOM0	CAPP0	CAPN0	MAT0	TOG0	PWM0	ECCF0

B7 : Reserved.

ECOM0 : Comparator Enable bit.
ECOM0=0 disables the comparator function;
ECOM0=1 enables the comparator function.

CAPP0 : Capture Positive control bit.
CAPP0=1 enables positive edge capture.

CAPN0 : Capture Negative control bit.
CAPN0=1 enables negative edge capture.

MAT0 : Match control bit.
When MAT0 = 1, a match of the PCA counter with this module's compare/capture register causes the CCF0 bit in CCON to be set.

TOG0 : Toggle control bit.
When TOG0=1, a match of the PCA counter with this module's compare/capture register causes the CCP0 pin to toggle.
(CCP0/PCA0/PWM0/P1.1 or CCP0_2/PCA0/PWM0/P3.5 or CCP0_3/PCA0/PWM0/P2.5)

PWM0 : Pulse Width Modulation.
PWM0=1 enables the CCP0 pin to be used as a pulse width modulated output.
(CCP0/PCA0/PWM0/P1.1 or CCP0_2/PCA0/PWM0/P3.5 or CCP0_3/PCA0/PWM0/P2.5)

ECCF0 : Enable CCF0 interrupt.
Enables compare/capture flag CCF0 in the CCON register to generate an interrupt.

Capture/Compare register of PCA module 1 : CCAPM1 (Non bit-addressable)

SFR name	Address	bit	B7	B6	B5	B4	B3	B2	B1	B0
CCAPM1	DBH	name	-	ECOM1	CAPP1	CAPN1	MAT1	TOG1	PWM1	ECCF1

ECOM1 : Comparator Enable bit.
ECOM1=0 disables the comparator function;
ECOM1=1 enables the comparator function.

CAPP1 : Capture Positive control bit.
CAPP1=1 enables positive edge capture.

CAPN1 : Capture Negative control bit.
CAPN1=1 enables negative edge capture.

MAT1 : Match control bit.
When MAT1 = 1, a match of the PCA counter with this module's compare/capture register causes the CCF1 bit in CCON to be set.

TOG1 : Toggle control bit.
When TOG1=1, a match of the PCA counter with this module's compare/capture register causes the CCP1 pin to toggle.
(CCP1/PCA1/PWM1/P1.0 or CCP1_2/PCA1/PWM1/P3.6 or CCP1_3/PCA1/PWM1/P2.6)

PWM1 : Pulse Width Modulation.
PWM1=1 enables the CCP1 pin to be used as a pulse width modulated output.
(CCP1/PCA1/PWM1/P1.0 or CCP1_2/PCA1/PWM1/P3.6 or CCP1_3/PCA1/PWM1/P2.6)

ECCF1 : Enable CCF1 interrupt.
Enables compare/capture flag CCF1 in the CCON register to generate an interrupt.

STC MCU Limited.

Capture/Compare register of PCA module 2 : CCAPM2 (Non bit-addressable)

SFR name	Address	bit	B7	B6	B5	B4	B3	B2	B2	B0
CCAPM2	DCH	name	-	ECOM2	CAPP2	CAPN2	MAT2	TOG2	PWM2	ECCF2

ECOM2 : Comparator Enable bit.
ECOM2=0 disables the comparator function;
ECOM2=1 enables the comparator function.

CAPP2 : Capture Positive control bit.
CAPP2=1 enables positive edge capture.

CAPN2 : Capture Negative control bit.
CAPN2=1 enables negative edge capture.

MAT2 : Match control bit.
When MAT2 = 1, a match of the PCA counter with this module's compare/capture register causes the CCF2 bit in CCON to be set.

TOG2 : Toggle control bit.
When TOG2=1, a match of the PCA counter with this module's compare/capture register causes the CCP2 pin to toggle.
(CCP2/PCA2/PWM2/P3.7 or CCP2/PCA2/PWM2/P2.7)

PWM2 : Pulse Width Modulation.
PWM2=1 enables the CCP2 pin to be used as a pulse width modulated output.
(CCP2/PCA2/PWM2/P3.7 or CCP2/PCA2/PWM2/P2.7)

ECCF2 : Enable CCF2 interrupt.
Enables compare/capture flag CCF2 in the CCON register to generate an interrupt.

STC MCU Limited.

4. PCA 16-bit Counter — low 8-bit CL and high 8-bit CH

The addresses of CL and CH respectively are E9H and F9H, and their reset value both are 00H. CL and CH are used to save the PCA load value.

5. PCA Capture/Compare register — CCAPnL and CCAPnH

When PCA is used to capture/compare, CCAPnL and CCAPnH are used to save the 16-bit capture value in corresponding block. When PCA is operated in PWM mode, CCAPnL and CCAPnH are used to control the duty cycle of PWM output signal. "n=0 or 1 or 2" respectively stand for module 0 and 1 and 2. Reset value of regsiters CCAPnL and CCAPnH are both 00H. Their addresses respectively are:

CCAP0L — EAH, CCAP0H — FAH : Capture / Compare register of module 0

CCAP1L — EBH, CCAP1H — FBH : Capture / Compare register of module 1

CCAP2L — ECH, CCAP2H — FCH : Capture / Compare register of module 2

6. PWM registers of PCA modules : PCA_PWM0, PCA_PWM1 and PCA_PWM2

PCA_PWM0 : PWM register of PCA module 0

SFR name	Address	bit	B7	B6	B5	B4	B3	B2	B1	B0
PCA_PWM0	F2H	name	EBS0_1	EBS0_0	-	-	-	-	EPC0H	EPC0L

EBS0_1 , EBS0_0 : Function Select bit when PCA module 0 work as Pulse Width Modulator (PWM)

0 , 0 : PCA module 0 is used as 8-bit PWM;
0 , 1 : PCA module 0 is used as 7-bit PWM;
1 , 0 : PCA module 0 is used as 6-bit PWM;
1 , 1 : Invalid, PCA module 0 is still used as 8-bit PWM.

B5 ~ B2 : Reserved

EPC0H : Associated with CCAP0H, it is used in PCA PWM mode.

EPC0L : Associated with CCAP0L, it is used in PCA PWM mode.

PCA_PWM1 : PWM register of PCA module 1

SFR name	Address	bit	B7	B6	B5	B4	B3	B2	B1	B0
PCA_PWM1	F3H	name	EBS1_1	EBS1_0	-	-	-	-	EPC1H	EPC1L

EBS1_1 , EBS1_0 : Function Select bit when PCA module 1 work as Pulse Width Modulator (PWM)

0 , 0 : PCA module 1 is used as 8-bit PWM;
0 , 1 : PCA module 1 is used as 7-bit PWM;
1 , 0 : PCA module 1 is used as 6-bit PWM;
1 , 1 : Invalid, PCA module 1 is still used as 8-bit PWM.

B5 ~ B2 : Reserved

EPC1H : Associated with CCAP1H, it is used in PCA PWM mode.

EPC1L : Associated with CCAP1L, it is used in PCA PWM mode.

PCA_PWM2 : PWM register of PCA module 2

SFR name	Address	bit	B7	B6	B5	B4	B3	B2	B1	B0
PCA_PWM2	F4H	name	EBS2_1	EBS2_0	-	-	-	-	EPC2H	EPC2L

EBS2_1 , EBS2_0 : Function Select bit when PCA module 2 work as Pulse Width Modulator (PWM)

0 , 0 : PCA module 2 is used as 8-bit PWM;
0 , 1 : PCA module 2 is used as 7-bit PWM;
1 , 0 : PCA module 2 is used as 6-bit PWM;
1 , 1 : Invalid, PCA module 2 is still used as 8-bit PWM.

B5 ~ B2 : Reserved

EPC2H : Associated with CCAP2H, it is used in PCA PWM mode.

EPC2L : Associated with CCAP2L, it is used in PCA PWM mode.

STC MCU Limited.

The operation mode of PCA modules set as shown in the below table.

Setting the operation mode of PCA modules（CCAPMn register，n = 0,1,2）

EBSn_1	EBSn_0	-	ECOMn	CAPPn	CAPNn	MATn	TOGn	PWMn	ECCFn	Function of PCA modules
X	X		0	0	0	0	0	0	0	No operation
0	0		1	0	0	0	0	1	0	8-bit PWM, no interrupt
0	1		1	0	0	0	0	1	0	7-bit PWM, no interrupt
1	0		1	0	0	0	0	1	0	6-bit PWM, no interrupt
1	1		1	0	0	0	0	1	0	8-bit PWM, no interrupt
0	0		1	1	0	0	0	1	1	8-bit PWM output, interrupt can be generated on rising edge.
0	1		1	1	0	0	0	1	1	7-bit PWM output, interrupt can be generated on rising edge.
1	0		1	1	0	0	0	1	1	6-bit PWM output, interrupt can be generated on rising edge.
1	1		1	1	0	0	0	1	1	8-bit PWM output, interrupt can be generated on rising edge.
0	0		1	0	1	0	0	1	1	8-bit PWM output, interrupt can be generated on falling edge.
0	1		1	0	1	0	0	1	1	7-bit PWM output, interrupt can be generated on falling edge.
1	0		1	0	1	0	0	1	1	6-bit PWM output, interrupt can be generated on falling edge.
1	1		1	0	1	0	0	1	1	8-bit PWM output, interrupt can be generated on falling edge.
0	0		1	1	1	0	0	1	1	8-bit PWM output, interrupt can be generated on both rising and falling edges.
0	1		1	1	1	0	0	1	1	7-bit PWM output, interrupt can be generated on both rising and falling edges.
1	0		1	1	1	0	0	1	1	6-bit PWM output, interrupt can be generated on both rising and falling edges.
1	1		1	1	1	0	0	1	1	8-bit PWM output, interrupt can be generated on both rising and falling edges.
X	X		X	1	0	0	0	0	X	16-bit Capture Mode, caputre triggered by the rising edge on CCPn/PCAn pin
X	X		X	0	1	0	0	0	X	16-bit Capture Mode, capture triggered by the falling edge on CCPn/PCAn pin
X	X		X	1	1	0	0	0	X	16-bit Capture Mode, capture triggered by the transition on CCPn/PCAn pin
X	X		1	0	0	1	0	0	X	16-bit software timer
X	X		1	0	0	1	1	0	X	16-bit high-speed output

STC MCU Limited

7. CCP/PCA/PWM Switch Control bits: CCP_S1 / P_SW1.5 and CCP_S0 / P_SW1.4

AUXR1 / P_SW1 : Peripheral function switch register (Non bit-addressable)

Mnemonic	Add	Name	7	6	5	4	3	2	1	0	Reset Value
AUXR1 P_SW1	A2H	Auxiliary register 1	S1_S1	S1_S0	CCP_S1	CCP_S0	SPI_S1	SPI_S0	0	DPS	0100,0000

CCP can be switched in 3 groups of pins by selecting the control bits CCP_S1 and CCP_S0.		
CCP_S1	CCP_S0	CCP can be switched in P1 and P2 and P3
0	0	CCP on [P1.2/ECI,P1.1/CCP0,P1.0/CCP1,P3.7/CCP2]
0	1	CCP on [P3.4/ECI_2,P3.5/CCP0_2,P3.6/CCP1_2,P3.7/CCP2_2]
1	0	CCP on [P2.4/ECI_3,P2.5/CCP0_3,P2.6/CCP1_3,P2.7/CCP2_3]
1	1	Invalid

UART1/S1 can be switched in 3 groups of pins by selecting the control bits S1_S0 and S1_S1.		
S1_S1	S1_S0	UART1/S1 can be switched between P1 and P3
0	0	UART1/S1 on [P3.0/RxD,P3.1/TxD]
0	1	UART1/S1 on [P3.6/RxD_2,P3.7/TxD_2]
1	0	UART1/S1 on [P1.6/RxD_3/XTAL2,P1.7/TxD_3/XTAL1] when UART1 is on P1, please using internal R/C clock.
1	1	Invalid

Recommed UART1 on [P3.6/RxD_2,P3.7/TxD_2] or [P1.6/RxD_3/XTAL2,P1.7/TxD_3/XTAL1].

SPI can be switched in 3 groups of pins by selecting the control bits SPI_S1 and SPI_S0		
SPI_S1	SPI_S0	SPI can be switched in P1 and P2 and P4
0	0	SPI on [P1.2/SS,P1.3/MOSI,P1.4/MISO,P1.5/SCLK]
0	1	SPI on [P2.4/SS_2,P2.3/MOSI_2,P2.2/MISO_2,P2.1/SCLK_2]
1	0	SPI on [P5.4/SS_3,P4.0/MOSI_3,P4.1/MISO_3,P4.3/SCLK_3]
1	1	Invalid

DPS：DPTR registers select bit.

0: DPTR0 is selected

1: DPTR1 is selected

STC MCU Limited.

11.2 CCP/PCA/PWM Structure

There are 3 channels CCP/PWM/PCA (Programmable Counter Arrary) in STC15 series MCU. (CCP/PCA/PWM function can be swicthed from P1 port to P2 port or to P3 port by setting AUXR1/P_SW1 register).

The Programmable Counter Array (PCA) is a special 16-bit Timer that has three 16-bit capture/compare modules associated with it. See the following figure.

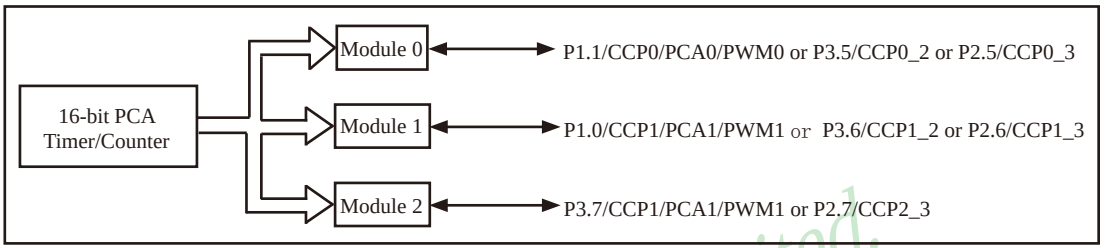

Programmable Counter Arrary Structure

Each PCA/PWM module can be operated in 4 modes : rising/falling capture mode, software timer, high-speed output mode and adjustable pulse output mode.

STC15F2K60S2 series : module 0 connect to P1.1/CCP0 (which can be swiched to P3.5/CCP0_2 or to P2.5/CCP0_3);
module 1 connect to P1.0/CCP1 (which can be swiched to P3.6/CCP1_2 or to P2.6/CCP1_3);
module 2 connect to P3.7/CCP2 (which can be swiched to P3.7/CCP2_2 or to P2.7/CCP2_3).

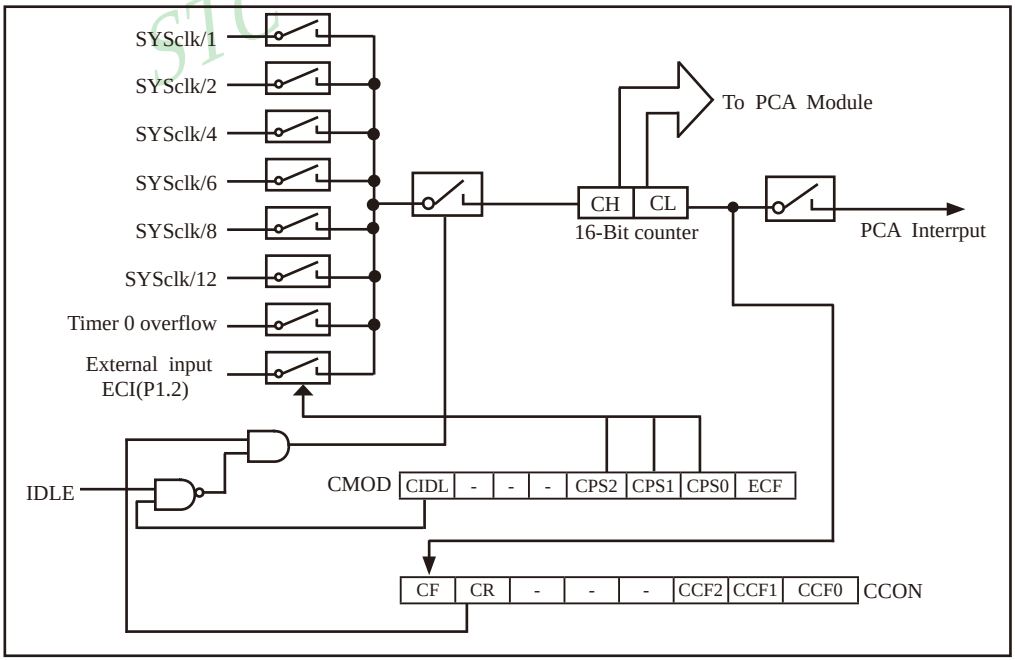

PCA Timer/Counter

STC MCU Limited.

The contents of registers CH and CL are the count value of 16-bit PCA timer. The PCA timer is a common time base for all three modules and can be programmed to run at 1/12 system clock, 1/8 system clock, 1/6 system clock, 1/2 system clock, system clock, the Timer 0 overflow or the input on ECI pin (in P1.2 or P2.4 or P3.4). The timer count source is determined from CCP2 and CPS1 and CPS0 bits in the CMOD SFR.

In the CMOD SFR, there are two additional bits associated with the PCA. They are CIDL which allows the PCA to stop during idle mode, and ECF which when set causes an interrupt and the PCA overflow flag CF (in the CCON SFR) to be set when the PCA timer overflows.

The CCON SFR contains the run control bit (CR) for PCA and the flags for the PCA timer (CF) and each module (CCF2/CCF1/CCF0). To run the PCA the CR bit(CCON.6) must be set by software; oppositely clearing bit CR will shut off PCA is shut off PCA. The CF bit(CCON.7) is set when the PCA counter overflows and an interrupt will be generated if the ECF (CMOD.0) bit in the CMOD register is set. The CF bit can only be cleared by software. There are three bits named CCF0 and CCF1 and CCF2 in SFR CCON. The CCF0 and CCF1 and CCF2 are the flags for module 0 and module 1 and module 2 respectively. They are set by hardware when either a match or a capture occurs. These flags also can only be cleared by software.

Each module in the PCA has a special function register associated with it, CCAPM0 for module-0 and CCAPM1 for module-1 and CCAPM2 for module-2. The register contains the bits that control the mode in which each module will operate.

The ECCFn (n=0,1,2) bit controls if to pass the interrupt from CCFn flag in the CCON SFR to the MCU when a match or compare occurs in the associated module.

PWMn enables the pulse width modulation mode.

The TOGn bit when set causes the pin CCPn output associated with the module to toggle when there is a match between the PCA counter and the module's Capture/Compare register.

The match bit(MATn) when set will cause the CCFn bit in the CCON register to be set when there is a match between the PCA counter and the module's Capture/Compare register.

The next two bits CAPNn and CAPPn determine the edge type that a capture input will be active on. The CAPNn bit enables the negative edge, and the CAPPn bit enables the positive edge. If both bits are set, both edges will be enabled and a capture will occur for either transition.

The bit ECOMn when set enables the comparator function.

STC MCU Limited

11.3 CCP/PCA Modules Operation Mode

The operation mode of PCA modules set as shown in the below table.

Setting the operation mode of PCA modules（CCAPMn register，n = 0,1,2）

EBSn_1	EBSn_0	-	ECOMn	CAPPn	CAPNn	MATn	TOGn	PWMn	ECCFn	Function of PCA modules
X	X		0	0	0	0	0	0	0	No operation
0	0		1	0	0	0	0	1	0	8-bit PWM, no interrupt
0	1		1	0	0	0	0	1	0	7-bit PWM, no interrupt
1	0		1	0	0	0	0	1	0	6-bit PWM, no interrupt
1	1		1	0	0	0	0	1	0	8-bit PWM, no interrupt
0	0		1	1	0	0	0	1	1	8-bit PWM output, interrupt can be generated on rising edge.
0	1		1	1	0	0	0	1	1	7-bit PWM output, interrupt can be generated on rising edge.
1	0		1	1	0	0	0	1	1	6-bit PWM output, interrupt can be generated on rising edge.
1	1		1	1	0	0	0	1	1	8-bit PWM output, interrupt can be generated on rising edge.
0	0		1	0	1	0	0	1	1	8-bit PWM output, interrupt can be generated on falling edge.
0	1		1	0	1	0	0	1	1	7-bit PWM output, interrupt can be generated on falling edge.
1	0		1	0	1	0	0	1	1	6-bit PWM output, interrupt can be generated on falling edge.
1	1		1	0	1	0	0	1	1	8-bit PWM output, interrupt can be generated on falling edge.
0	0		1	1	1	0	0	1	1	8-bit PWM output, interrupt can be generated on both rising and falling edges.
0	1		1	1	1	0	0	1	1	7-bit PWM output, interrupt can be generated on both rising and falling edges.
1	0		1	1	1	0	0	1	1	6-bit PWM output, interrupt can be generated on both rising and falling edges.
1	1		1	1	1	0	0	1	1	8-bit PWM output, interrupt can be generated on both rising and falling edges.
X	X		X	1	0	0	0	0	X	16-bit Capture Mode, caputre triggered by the rising edge on CCPn/PCAn pin
X	X		X	0	1	0	0	0	X	16-bit Capture Mode, capture triggered by the falling edge on CCPn/PCAn pin
X	X		X	1	1	0	0	0	X	16-bit Capture Mode, capture triggered by the transition on CCPn/PCAn pin
X	X		1	0	0	1	0	0	X	16-bit software timer
X	X		1	0	0	1	1	0	X	16-bit high-speed output

STC MCU Limited

11.3.1 CCP/PCA Capture Mode

To use one of the PCA modules in the capture mode either one or both of the CCAPM bits – CAPPn and CAPNn, for the module must be set. The external CCPn input (CCP0/P1.1,CCP1/P1.0, CCP2/P3.7) for the module is sampled for a transition. When a valid transition occurs, the PCA hardware loads the value of the PCA counter register (CH and CL) into the module's capture registers (CCAPnH and CCAPnL). If the CCFn bit for the module in the CCON SFR and the ECCFn bit in the CCAPMn SFR are set then an interrupt will be generated.

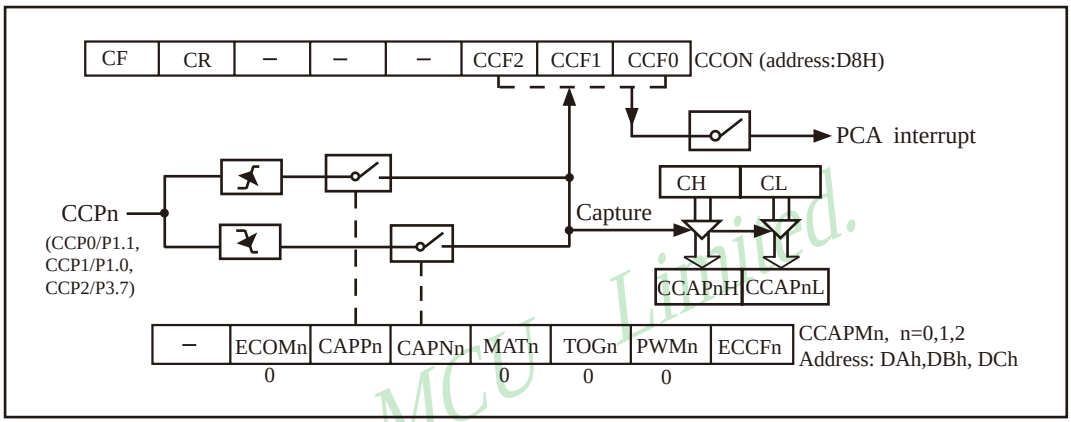

PCA Capture Mode (PCA Capture mode)

STC MCU Limited.

11.3.2 16-bit Software Timer Mode

The internal structure diagram of 16-bit software timer mode is shown below.

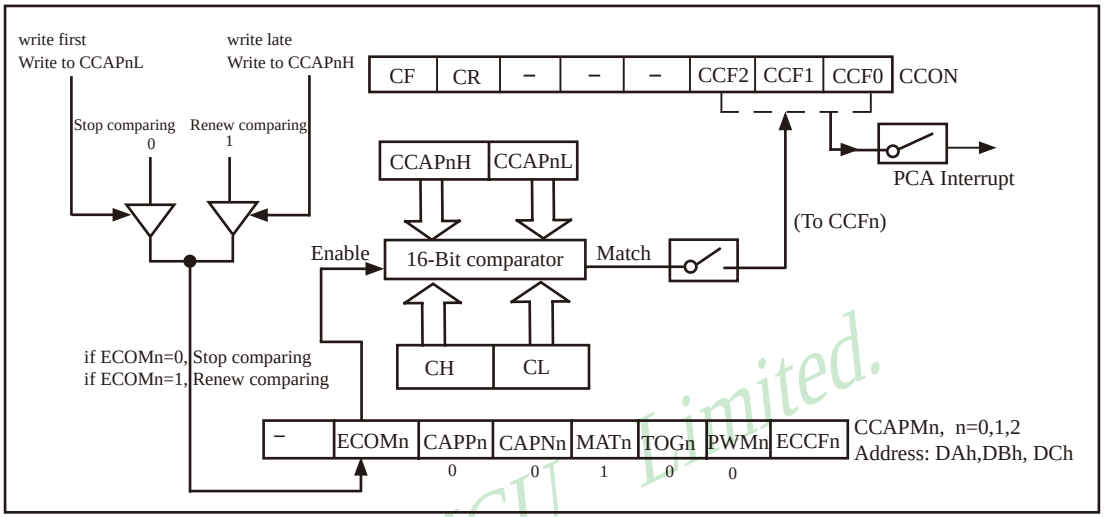

PCA Software Timer Mode / 16-bit software timer mode / PCA compare mode

The PCA modules can be used as software timers by setting both the ECOMn and MATn bits in the modules CCAPMn register. The PCA timer will be compared to the module's capture registers and when a match occurs an interrupt will be generated if the CCFn and ECCFn bits for the module are both set.

[CH,CL] is automatically incremented at a certain time which depends on the selected clcok source. For example,[CH,CL] is incremented every 12 clock when the clock source is SYSclk/12. When [CH,CL] have been increased to equal the value of register [CCAPnH, CCAPnL], a interrupt request would be generated and CCFn=1 (n=0, 1, 2). The 16-bit software timer intervals depend on the selection of clock source and settings of PCA counter. The following example shows the calculation method of PCA count value.

IF the system frequency SYSclk = 18.432MHz and the clock source SYSclk/12 is choosed and the timer intervals T = 5ms, the count value of PCA timer would be computed by the following formula:

PCA count value = T / ((1 / SYSclk)×12) = 0.005 / ((1 / 18432000)×12) = 7680 (decimal)
= 1E00H (hexadecimal)

In other words, when [CH,CL] is incremented to equal 1E00H, the 5ms timer is time out.

STC MCU Limited.

11.3.3 High Speed Output Mode

In this mode the CCPn output (port latch) associated with the PCA module will toggle each time a match occurs between the PCA counter and the module's capture registers. To activate this mode the TOGn,MATn,and ECOMn bits in the module's CCAPMn SFR must be set.

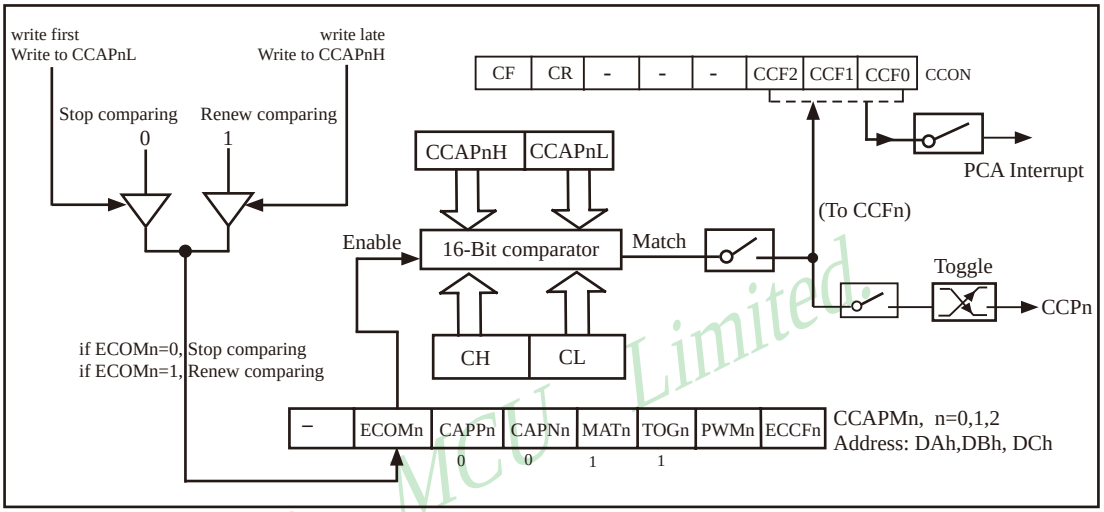

PCA High-Speed Output Mode

The frequency of output pulse is determined by the value of CCAPn for PCA module n. When the PCA clock source is SYSclk/2, the output pulse frequency F is calculated by:

$$f = SYSclk / (4 \times CCAPnL)$$

SYSclk stands for system clock frequency in above formula. Consequently CCAPnL = SYSclk / (4×f).

If the computing result is not integer, CCPAPnL should be rounded to the nearest integer:

$$CCAPnL = INT (SYSclk / (4 \times f) + 0.5)$$

For example, if SYSclk = 20MHz, and PCA output 125kHz square wave, CCAPn Lwould be:

$$CCAPnL = INT (20000000 / (4 \times 125000) + 0.5) = INT (40 + 0.5) = 40 = 28H$$

STC MCU Limited.

11.3.4 Pulse Width Modulator Mode (PWM mode)

Pulse Width Modulator (PWM) is to control waveform duty ratio, cycle and phase wave by software.

PCA module n (n=0,1,2, the same below) can work in 8-bit PWM mode or 7-bit PWM mode or 6-bit PWM mode by setting the corresponding bits EBSn_1/PCA_PWMn.7 and EBSn_0/PCA_PWMn.6 in register PCA_PWMn.

11.3.4.1 8-bit Pulse Width Modulator (PWM mode)

PCA module n (n=0,1,2) would be used as 8-bit pulse width mdulator if [EBSn_1,EBSn_0]=[0,0] **or [1,1]. And {0,CL[7:0]} would be compared with [EPCnL,CCAPnL[7:0]].** The internal structure diagram of 8-bit PWM mode is shown below.

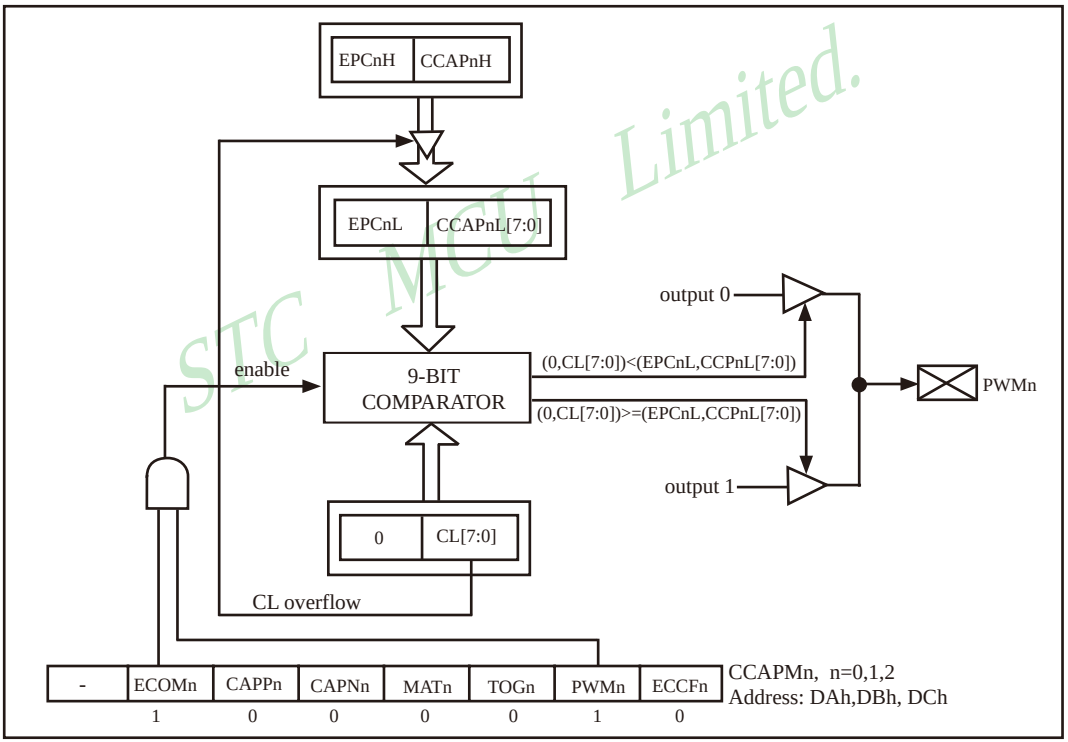

PCA PWM mode (PCA as 8-bit Pulse Width Modulator)

All of the PCA modules can be used as PWM outputs. The frequency of the output depends on the source for the PCA timer. All of the modules will have the same frequency of output because they all share the same PCA timer. The duty cycle of each module is independently variable using the module's capture register {EPCnL, CCAPnL[7:0]}. When the value of {**0,CL[7:0]**} is less than the value in the module's {EPCnL,CCAPnL[7:0]} SFR, the output will be low. When it is equal to or greater than , the output will be high. When {**0,CL[7:0]**} overflows from FFH to 00H, {EPCnL,CCAPnL[7:0]} is reloaded with the value in {EPCnH,CCAPnH[7:0]}. That allows updating the PWM without glitches. The PWMn and ECOMn bits in the module's CCAPMn register must be set to enable the PWM mode.

8-bit PWM: $$\text{PWM Frequency} = \frac{\text{Frequency of PCA Clock input source}}{256}$$

PCA clock source may be from : SYSclk, SYSclk/2, SYSclk/4, SYSclk/6, SYSclk/8, SYSclk/12, Timer 0 overflow and input on ECI/P1.2 pin.

Question: find out the value of SYSclk if PCA module work in 8-bit PWM mode and output frequency is 38KHz and SYSclk is used as PCA/PWM clock input source.

Possible solution: 38000 = SYSclk/256 according to the above calculating formula. So the frequency of external clock SYSclk=38000 x 256 x 1 = 9,728,000

Frequency-adjustable can be achieved by selecting Timer 1 overflow or input from pin ECI as PCA/PWM clock source.

If EPCnL = 0 and CCAPnL = 00H, PWM output high.
If EPCnL = 1 and CCAPnL = FFH, PWM output low.

STC MCU Limited.

11.3.4.2 7-bit Pulse Width Modulator (PWM mode)

PCA module n (n=0,1,2) would be used as 7-bit pulse width mdulator if [EBSn_1,EBSn_0]=[0,1]. And {0,CL[6:0]} would be compared with [EPCnL,CCAPnL[6:0]]. The internal structure diagram of 7-bit PWM mode is shown below.

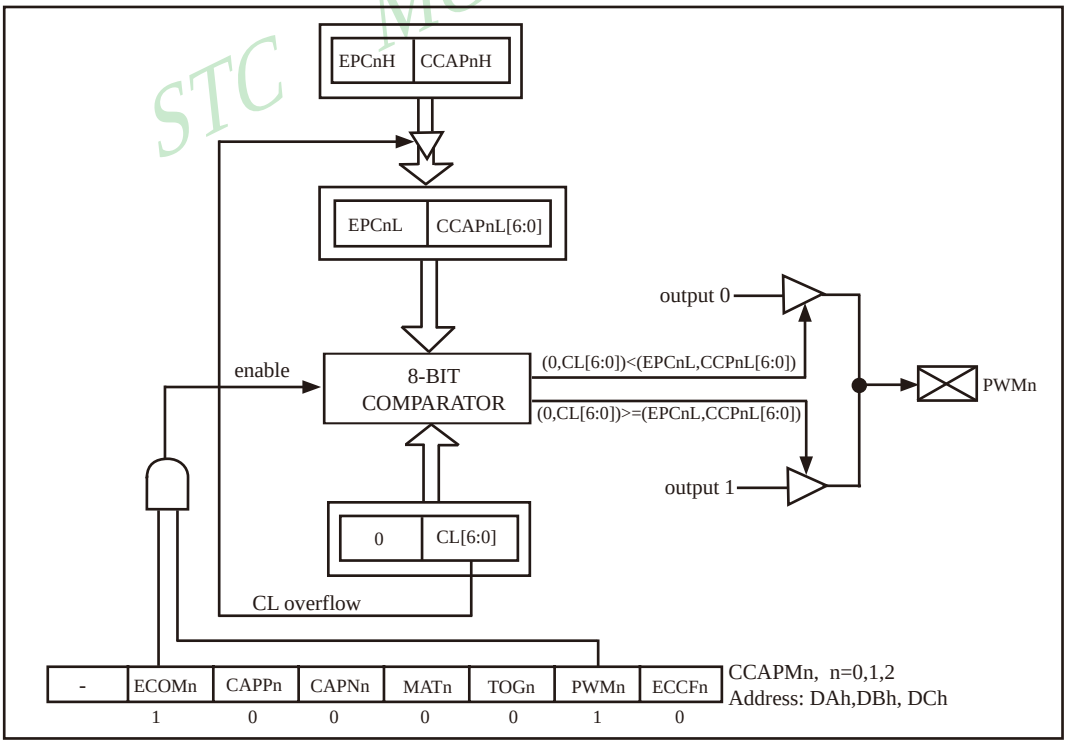

PCA PWM mode (PCA as 7-bit Pulse Width Modulator)

All of the PCA modules can be used as PWM outputs. The frequency of the output depends on the source for the PCA timer. All of the modules will have the same frequency of output because they all share the same PCA timer. The duty cycle of each module is independently variable using the module's capture register {EPCnL, CCAPnL[6:0]}. When the value of {0,CL[6:0]} is less than the value in the module's {EPCnL,CCAPnL[6:0]} SFR, the output will be low. When it is equal to or greater than , the output will be high. When {0,CL[6:0]} overflows from 7FH to 00H, {EPCnL,CCAPnL[6:0]} is reloaded with the value in {EPCnH,CCAPnH[6:0]}. That allows updating the PWM without glitches. The PWMn and ECOMn bits in the module's CCAPMn register must be set to enable the PWM mode.

7-bit PWM: $$\text{PWM Frequency} = \frac{\text{Frequency of PCA Clock input source}}{128}$$

PCA clock source may be from : SYSclk, SYSclk/2, SYSclk/4, SYSclk/6, SYSclk/8, SYSclk/12, Timer 0 overflow and input on ECI/P1.2 pin.

Question: find out the value of SYSclk if PCA module work in 7-bit PWM mode and output frequency is 38KHz and SYSclk is used as PCA/PWM clock input source.

Possible solution: 38000 = SYSclk/128 according to the above calculating formula. So the frequency of external clock SYSclk=38000 x 128 x 1 = 4,864,000

Frequency-adjustable can be achieved by selecting Timer 1 overflow or input from pin ECI as PCA/PWM clock source.

If EPCnL = 0 and CCAPnL = 80H, PWM output high.
If EPCnL = 1 and CCAPnL = FFH, PWM output low.

STC MCU Limited.

11.3.4.3 6-bit Pulse Width Modulator (PWM mode)

PCA module n (n=0,1,2) would be used as 6-bit pulse width mdulator if [EBSn_1,EBSn_0]=[1,0]. And {0,CL[5:0]} would be compared with [EPCnL,CCAPnL[5:0]]. The internal structure diagram of 6-bit PWM mode is shown below.

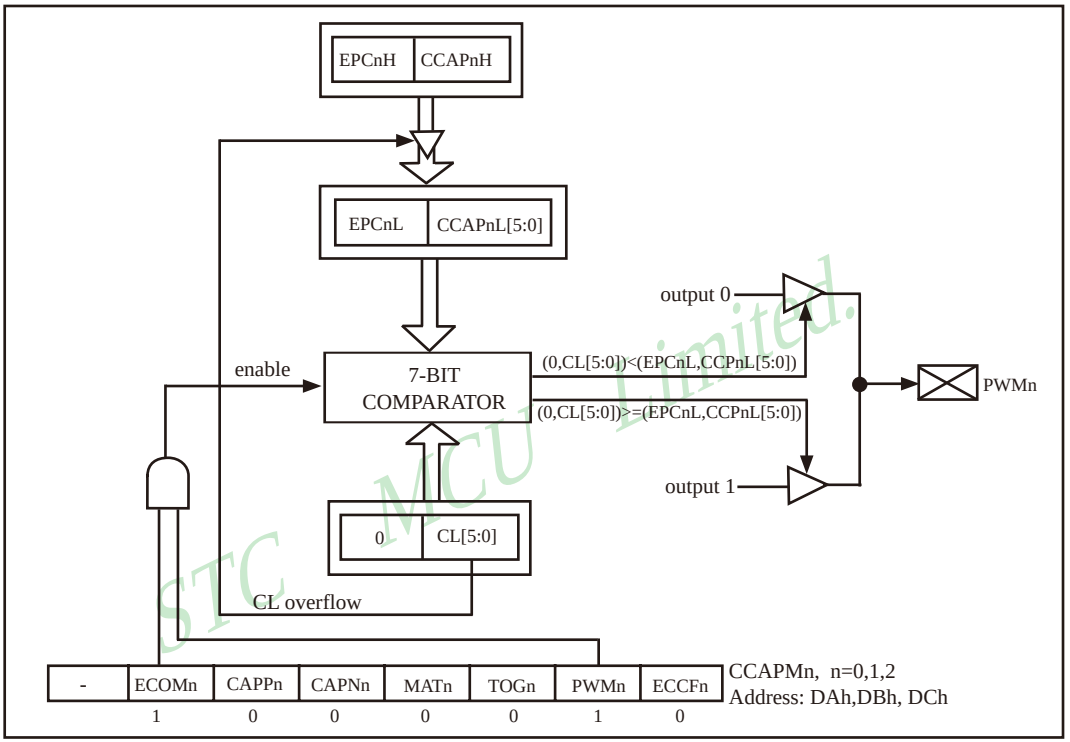

PCA PWM mode (PCA as 6-bit Pulse Width Modulator)

All of the PCA modules can be used as PWM outputs. The frequency of the output depends on the source for the PCA timer. All of the modules will have the same frequency of output because they all share the same PCA timer. The duty cycle of each module is independently variable using the module's capture register {EPCnL, CCAPnL[5:0]}. When the value of {0,CL[5:0]} is less than the value in the module's {EPCnL,CCAPnL[5:0]} SFR, the output will be low. When it is equal to or greater than , the output will be high. When {0,CL[5:0]} overflows from 3FH to 00H, {EPCnL,CCAPnL[5:0]} is reloaded with the value in {EPCnH,CCAPnH[5:0]}. That allows updating the PWM without glitches. The PWMn and ECOMn bits in the module's CCAPMn register must be set to enable the PWM mode.

6-bit PWM:

$$\text{PWM Frequency} = \frac{\text{Frequency of PCA Clock input source}}{64}$$

PCA clock source may be from : SYSclk, SYSclk/2, SYSclk/4, SYSclk/6, SYSclk/8, SYSclk/12, Timer 0 overflow and input on ECI/P1.2 pin.

Question: find out the value of SYSclk if PCA module work in 6-bit PWM mode and output frequency is 38KHz and SYSclk is used as PCA/PWM clock input source.

Possible solution: 38000 = SYSclk/64 according to the above calculating formula. So the frequency of external clock SYSclk=38000 x 64 x 1 = 2,432,000

Frequency-adjustable can be achieved by selecting Timer 1 overflow or input from pin ECI as PCA/PWM clock source.

If EPCnL = 0 and CCAPnL = C0H, PWM output high.

If EPCnL = 1 and CCAPnL = FFH, PWM output low.

STC MCU Limited.

11.4 Program using CCP/PCA to Extend External Interrupt

There are two demo programs for CCP/PCA module extended external interrupt, one wrriten in C language and the other in assembly language.

1.C Program Listing

```
/*---------------------------------------------------------------------------------------------------*/
/* --- STC MCU Limited. ----------------------------------------------------------------------------*/
/* --- Exam Program using CCP/PCA to extend external interrupt (falling edge) ----------------------*/
/* --- Mobile: (86)13922805190 ---------------------------------------------------------------------*/
/* --- Fax: 86-755-82905966 ------------------------------------------------------------------------*/
/* --- Tel: 86-755-82948412 ------------------------------------------------------------------------*/
/* --- Web: www.STCMCU.com -------------------------------------------------------------------------*/
/* If you want to use the program or the program referenced in the -----------------------------*/
/* article, please specify in which data and procedures from STC -------------------------------*/
/*---- In Keil C development environment, select the Intel 8052 to compiling ---------------------*/
/*----  And only contain < reg51.h > as header file ------------------------------------------------*/
/*---------------------------------------------------------------------------------------------------*/

//suppose the frequency of test chip is 18.432MHz

//This demo program take CCP/PCA module 0 for example. the use of CCP/PCA module 1 and CCP/PCA module
//2 are same as CCP/PCA module 0

#include "reg51.h"
#include "intrins.h"

#define FOSC    18432000L

typedef    unsigned char    BYTE;
typedef    unsigned int     WORD;
typedef    unsigned long    DWORD;

sfr     P_SW1   =   0xA2;                   //Peripheral Function Switch register 1

#define CCP_S0          0x10                //P_SW1.4
#define CCP_S1          0x20                //P_SW1.5

sfr     CCON    =   0xD8;                   //PCA Control Register
sbit    CCF0    =   CCON^0;                 //the interrupt request flag of PCA module 0
sbit    CCF1    =   CCON^1;                 //the interrupt request flag of PCA module 1
sbit    CR      =   CCON^6;                 //the run bit of PCA timer
sbit    CF      =   CCON^7;                 //the overflow flag of PCA timer
sfr     CMOD    =   0xD9;                   //PCA Mode register
sfr     CL      =   0xE9;
sfr     CH      =   0xF9;
sfr     CCAPM0      =   0xDA;
sfr     CCAP0L      =   0xEA;
sfr     CCAP0H      =   0xFA;
sfr     CCAPM1      =   0xDB;
sfr     CCAP1L      =   0xEB;
sfr     CCAP1H      =   0xFB;
```

STC MCU Limited.

```
sfr     CCAPM2      =   0xDC;
sfr     CCAP2L      =   0xEC;
sfr     CCAP2H      =   0xFC;

sfr     PCAPWM0     =   0xf2;
sfr     PCAPWM1     =   0xf3;
sfr     PCA_PWM2    =   0xf4;

sbit    PCA_LED     =   P1^0;           //PCA test LED

void PCA_isr() interrupt 7 using 1
{
    CCF0 = 0;                           //clear the interrupt request flag
    PCA_LED = !PCA_LED;
}

void main()
{
    ACC = P_SW1;
    ACC &= ~(CCP_S0 | CCP_S1);  //CCP_S0=0 CCP_S1=0
    P_SW1 = ACC;                        //(P1.2/ECI, P1.1/CCP0, P1.0/CCP1, P3.7/CCP2)

//  ACC = P_SW1;
//  ACC &= ~(CCP_S0 | CCP_S1);          //CCP_S0=1 CCP_S1=0
//  ACC |= CCP_S0;              //(P3.4/ECI_2, P3.5/CCP0_2, P3.6/CCP1_2, P3.7/CCP2_2)
//  P_SW1 = ACC;
//
//  ACC = P_SW1;
//  ACC &= ~(CCP_S0 | CCP_S1);          //CCP_S0=0 CCP_S1=1
//  ACC |= CCP_S1;              //(P2.4/ECI_3, P2.5/CCP0_3, P2.6/CCP1_3, P2.7/CCP2_3)
//  P_SW1 = ACC;

    CCON = 0;                           //Initialize the PCA control register
                                        //disable PCA timer
                                        //clear CF bit
                                        //clear the interrupt request flag
    CL = 0;                             //reset PCA timer
    CH = 0;
    CMOD = 0x00;

    CCAPM0 = 0x11;                      //PCA module 0 can be activated on falling edge
//  CCAPM0 = 0x21;                      //PCA module 0 can be activated on rising edge
//  CCAPM0 = 0x31;                      //PCA module 0 can be activated
                                        //both on falling and rising edge

    CR = 1;                             //run PCA timer
    EA = 1;

    while (1);
}
```

STC MCU Limited.

2.Assembler Listing

```
/*---------------------------------------------------------------------------------------------------*/
/* --- STC MCU  Limited. ---------------------------------------------------------------------------*/
/* --- Exam Program using CCP/PCA to extend external interrupt (falling edge) ----------------*/
/* --- Mobile: (86)13922805190 ---------------------------------------------------------------------*/
/* --- Fax: 86-755-82905966 ------------------------------------------------------------------------*/
/* --- Tel: 86-755-82948412 ------------------------------------------------------------------------*/
/* --- Web: www.STCMCU.com -------------------------------------------------------------------------*/
/* If you want to use the program or the program referenced in the  ----------------------------*/
/* article, please specify in which data and procedures from STC    ----------------------------*/
/*---- In Keil C development environment, select the Intel 8052 to compiling ------------------*/
/*----  And only contain < reg51.h > as header file ------------------------------------------------*/
/*---------------------------------------------------------------------------------------------------*/

//suppose the frequency of test chip is 18.432MHz

//This demo program take CCP/PCA module 0 for example. the use of CCP/PCA module 1 and CCP/PCA module
//2 are same as CCP/PCA module 0

P_SW1   EQU     0A2H                    //Peripheral Function Switch register 1

CCP_S0  EQU     10H                     //P_SW1.4
CCP_S1  EQU     20H                     //P_SW1.5

CCON    EQU     0D8H                    ;PCA Control Register
CCF0    BIT     CCON.0                  ;the interrupt request flag of PCA module 0
CCF1    BIT     CCON.1                  ;the interrupt request flag of PCA module 1
CR      BIT     CCON.6                  ;the run bit of PCA timer
CF      BIT     CCON.7                  ;the overflow flag of PCA timer
CMOD    EQU     0D9H                    ;PCA Mode register
CL      EQU     0E9H
CH      EQU     0F9H
CCAPM0          EQU     0DAH
CCAP0L          EQU     0EAH
CCAP0H          EQU     0FAH
CCAPM1          EQU     0DBH
CCAP1L          EQU     0EBH
CCAP1H          EQU     0FBH
CCAPM2          EQU     0DCH
CCAP2L          EQU     0ECH
CCAP2H          EQU     0FCH
PCA_PWM0        EQU     0F2H
PCA_PWM1        EQU     0F3H
PCA_PWM2        EQU     0F4H

PCA_LED BIT     P1.0                    ;PCA test LED
;--------------------------------------
        ORG     0000H
        LJMP    MAIN

        ORG     003BH
```

STC MCU Limited.

```
PCA_ISR:
        PUSH    PSW
        PUSH    ACC
CKECK_CCF0:
        JNB     CCF0,   PCA_ISR_EXIT
        CLR     CCF0                    ;clear the interrupt request flag
        CPL     PCA_LED
PCA_ISR_EXIT:
        POP     ACC
        POP     PSW
        RETI
;---------------------------------------
        ORG     0100H
MAIN:
        MOV     SP,     #5FH

        MOV     A,      P_SW1
        ANL     A,      #0CFH           //CCP_S0=0 CCP_S1=0
        MOV     P_SW1,  A               //(P1.2/ECI, P1.1/CCP0, P1.0/CCP1, P3.7/CCP2)

//      MOV     A,      P_SW1
//      ANL     A,      #0CFH           //CCP_S0=1 CCP_S1=0
//      ORL     A,      #CCP_S0         //(P3.4/ECI_2, P3.5/CCP0_2, P3.6/CCP1_2, P3.7/CCP2_2)
//      MOV     P_SW1,  A
//
//      MOV     A,      P_SW1
//      ANL     A,      #0CFH           //CCP_S0=0 CCP_S1=1
//      ORL     A,      #CCP_S1         //(P2.4/ECI_3, P2.5/CCP0_3, P2.6/CCP1_3, P2.7/CCP2_3)
//      MOV     P_SW1,  A

        MOV     CCON,   #0              ;Initialize the PCA control register
                                        ;disable PCA timer
                                        ;clear CF bit
                                        ;clear the interrupt request flag
        CLR     A                       ;
        MOV     CL,     A               ;reset PCA timer
        MOV     CH,     A               ;
        MOV     CMOD,   #00H

        MOV     CCAPM0,   #11H          ;PCA module 0 capture the falling edge of CCP0(P1.3) pin
;       MOV     CCAPM0,   #21H          ;PCA module 0 capture the rising edge of CCP0(P1.3) pin
;       MOV     CCAPM0,   #31H          ;PCA module 0 capture falling as well as
                                        ;rising edge of CCP0(P1.3) pin
;------------------------------
        SETB    CR                      ;run PCA timer
        SETB    EA

        SJMP    $
;---------------------------------------
        END
```

STC MCU Limited.

11.5 Demo Program for CCP/PCA acted as 16-bit Timer

There are two programs for PCA module acted as 16-bit software Timer demo, one wrriten in C language and the other in assembly language.

1.C Program Listing

```
/*---------------------------------------------------------------------------------------------------*/
/* --- STC MCU  Limited. ---------------------------------------------------------------------------*/
/* --- Exam Program using CCP/PCA as 16-bit software Timer -----------------------------------------*/
/* --- Mobile: (86)13922805190 ---------------------------------------------------------------------*/
/* --- Fax: 86-755-82905966 ------------------------------------------------------------------------*/
/* --- Tel: 86-755-82948412 ------------------------------------------------------------------------*/
/* --- Web: www.STCMCU.com -------------------------------------------------------------------------*/
/* If you want to use the program or the program referenced in the  ----------------------------*/
/* article, please specify in which data and procedures from STC    ----------------------------*/
/*---- In Keil C development environment, select the Intel 8052 to compiling ---------------------*/
/*----  And only contain < reg51.h > as header file ----------------------------------------------*/
/*---------------------------------------------------------------------------------------------------*/

//suppose the frequency of test chip is 18.432MHz

#include "reg51.h"
#include "intrins.h"

#define   FOSC    18432000L
#define   T100Hz  (FOSC / 12 / 100)

typedef unsigned char   BYTE;
typedef unsigned int    WORD;

sfr     P_SW1   =   0xA2;                   //Peripheral function switch register 1

#define CCP_S0      0x10                    //P_SW1.4
#define CCP_S1      0x20                    //P_SW1.5

/*Declare SFR associated with the PCA */
sfr     CCON    =   0xD8;                   //PCA control register
sbit    CCF0    =   CCON^0;                 //PCA module-0 interrupt flag
sbit    CCF1    =   CCON^1;                 //PCA module-1 interrupt flag
sbit    CCF2    =   CCON^2;                 //PCA module-2 interrupt flag
sbit    CR      =   CCON^6;                 //PCA timer run control bit
sbit    CF      =   CCON^7;                 //PCA timer overflow flag
sfr     CMOD    =   0xD9;                   //PCA mode register
sfr     CL      =   0xE9;                   //PCA base timer LOW
sfr     CH      =   0xF9;                   //PCA base timer HIGH
```

STC MCU Limited.

```
sfr     CCAPM0      =   0xDA;           //PCA module-0 mode register
sfr     CCAP0L      =   0xEA;           //PCA module-0 capture register LOW
sfr     CCAP0H      =   0xFA;           //PCA module-0 capture register HIGH
sfr     CCAPM1      =   0xDB;           //PCA module-1 mode register
sfr     CCAP1L      =   0xEB;           //PCA module-1 capture register LOW
sfr     CCAP1H      =   0xFB;           //PCA module-1 capture register HIGH
sfr     CCAPM2      =   0xDC;           //PCA module-2 mode register
sfr     CCAP2L      =   0xEC;           //PCA module-2 capture register LOW
sfr     CCAP2H      =   0xFC;           //PCA module-2 capture register HIGH
sfr     PCAPWM0     =   0xf2;
sfr     PCAPWM1     =   0xf3;
sfr     PCAPWM2     =   0xf4;

sbit    PCA_LED     =   P1^0;           //PCA test LED

BYTE    cnt;
WORD    value;

void PCA_isr() interrupt 7 using 1
{
        CCF0 = 0;                       //Clear interrupt flag
        CCAP0L = value;
        CCAP0H = value >> 8;            //Update compare value
        value += T100Hz;
        if (cnt-- == 0)
        {
            cnt = 100;                  //Count 100 times
            PCA_LED = !PCA_LED;         //Flash once per second
        }
}

void main()
{
        ACC     =   P_SW1;
        ACC     &=  ~(CCP_S0 | CCP_S1);     //CCP_S0=0 CCP_S1=0
        P_SW1   =   ACC;                    //(P1.2/ECI, P1.1/CCP0, P1.0/CCP1, P3.7/CCP2)

//      ACC     =   P_SW1;
//      ACC     &=   ~(CCP_S0 | CCP_S1);    //CCP_S0=1 CCP_S1=0
//      ACC     |=  CCP_S0;             //(P3.4/ECI_2, P3.5/CCP0_2, P3.6/CCP1_2, P3.7/CCP2_2)
//      P_SW1   =   ACC;
//
//      ACC     =   P_SW1;
//      ACC     &=  ~(CCP_S0 | CCP_S1);     //CCP_S0=0 CCP_S1=1
//      ACC     |=  CCP_S1;             //(P2.4/ECI_3, P2.5/CCP0_3, P2.6/CCP1_3, P2.7/CCP2_3)
//      P_SW1   =   ACC;
```

STC MCU Limited.

```
    CCON    =       0;                  //Initial PCA control register
                                        //PCA timer stop running
                                        //Clear CF flag
                                        //Clear all module interrupt flag
    CL      =       0;                  //Reset PCA base timer
    CH      =       0;
    CMOD    =       0x00;               //Set PCA timer clock source as Fosc/12
                                        //Disable PCA timer overflow interrupt
    value   =       T100Hz;
    CCAP0L  =       value;
    CCAP0H  =       value >> 8;         //Initial PCA module-0
    value   +=      T100Hz;
    CCAPM0  =       0x49;               //PCA module-0 work in 16-bit timer mode
                                        //and enable PCA interrupt

    CR = 1;                             //PCA timer start run
    EA = 1;
    cnt = 0;

    while (1);
}
```

STC MCU Limited.

2.Assembler Listing

```
/*---------------------------------------------------------------------------------------------------*/
/* --- STC MCU  Limited. ---------------------------------------------------------------------------*/
/* --- Exam Program using CCP/PCA as 16-bit software Timer -----------------------------------------*/
/* --- Mobile: (86)13922805190 ---------------------------------------------------------------------*/
/* --- Fax: 86-755-82905966 ------------------------------------------------------------------------*/
/* --- Tel: 86-755-82948412 ------------------------------------------------------------------------*/
/* --- Web: www.STCMCU.com -------------------------------------------------------------------------*/
/* If you want to use the program or the program referenced in the  ----------------------------*/
/* article, please specify in which data and procedures from STC    ----------------------------*/
/*---- In Keil C development environment, select the Intel 8052 to compiling ------------------*/
/*----  And only contain < reg51.h > as header file ------------------------------------------------*/
/*---------------------------------------------------------------------------------------------------*/

//suppose the frequency of test chip is 18.432MHz

T100Hz          EQU     3C00H           ;(18432000 / 12 / 100)
P_SW1           EQU     0A2H            ;Peripheral function switch register1

CCP_S0          EQU     10H             ;P_SW1.4
CCP_S1          EQU     20H             ;P_SW1.5
```

```
;/*Declare SFR associated with the PCA */
CCON        EQU   0D8H        ;PCA control register
CCF0        BIT   CCON.0      ;PCA module-0 interrupt flag
CCF1        BIT   CCON.1      ;PCA module-1 interrupt flag
CCF2        BIT   CCON.2      ;PCA module-2 interrupt flag
CR          BIT   CCON.6      ;PCA timer run control bit
CF          BIT   CCON.7      ;PCA timer overflow flag
CMOD        EQU   0D9H        ;PCA mode register
CL          EQU   0E9H        ;PCA base timer LOW
CH          EQU   0F9H        ;PCA base timer HIGH
CCAPM0      EQU   0DAH        ;PCA module-0 mode register
CCAP0L      EQU   0EAH        ;PCA module-0 capture register LOW
CCAP0H      EQU   0FAH        ;PCA module-0 capture register HIGH
CCAPM1      EQU   0DBH        ;PCA module-1 mode register
CCAP1L      EQU   0EBH        ;PCA module-1 capture register LOW
CCAP1H      EQU   0FBH        ;PCA module-1 capture register HIGH
CCAPM2      EQU   0DCH        ;PCA module-2 mode register
CCAP2L      EQU   0ECH        ;PCA module-2 capture register LOW
CCAP2H      EQU   0FCH        ;PCA module-2 capture register HIGH

PCA_LED     BIT   P1.0        ;PCA test LED
CNT         EQU   20H
;-------------------------------------------------------------------
            ORG   0000H
            LJMP  MAIN

            ORG   003BH
            LJMP  PCA_ISR
;-------------------------------------------------------------------
            ORG   0100H
MAIN:
            MOV   SP,   #3FH              ;Initial stack point
            MOV   A,    P_SW1
            ANL   A,    #0CFH             //CCP_S0=0 CCP_S1=0
            MOV   P_SW1, A                //(P1.2/ECI, P1.1/CCP0, P1.0/CCP1, P3.7/CCP2)
//          MOV   A,    P_SW1
//          ANL   A,    #0CFH             //CCP_S0=1 CCP_S1=0
//          ORL   A,    #CCP_S0           //(P3.4/ECI_2, P3.5/CCP0_2, P3.6/CCP1_2, P3.7/CCP2_2)
//          MOV   P_SW1, A
//
//          MOV   A,    P_SW1
//          ANL   A,    #0CFH             //CCP_S0=0 CCP_S1=1
//          ORL   A,    #CCP_S1           //(P2.4/ECI_3, P2.5/CCP0_3, P2.6/CCP1_3, P2.7/CCP2_3)
//          MOV   P_SW1, A

            MOV   CCON, #0                ;Initial PCA control register
                                          ;PCA timer stop running
                                          ;Clear CF flag
                                          ;Clear all module interrupt flag
```

STC MCU Limited.

```
        CLR     A                                   ;
        MOV     CL,     A                           ;Reset PCA base timer
        MOV     CH,     A                           ;
        MOV     CMOD,   #00H                        ;Set PCA timer clock source as Fosc/12
                                                    ;Disable PCA timer overflow interrupt
;-------------------------------
        MOV     CCAP0L,         #LOW T100Hz         ;
        MOV     CCAP0H,         #HIGH T100Hz        ;Initial PCA module-0
        MOV     CCAPM0,         #49H                ;PCA module-0 work in 16-bit timer mode
                                                    ;and enable PCA interrupt
;-------------------------------
        SETB    CR                                  ;PCA timer start run
        SETB    EA
        MOV     CNT,    #100

        SJMP    $
;----------------------------------------
PCA_ISR:
        PUSH    PSW
        PUSH    ACC
        CLR     CCF0                                ;Clear interrupt flag
        MOV     A,      CCAP0L
        ADD     A,      #LOW T100Hz                 ;Update compare value
        MOV     CCAP0L,A
        MOV     A,      CCAP0H
        ADDC    A,      #HIGH T100Hz
        MOV     CCAP0H,         A
        DJNZ    CNT,    PCA_ISR_EXIT                ;count 100 times
        MOV     CNT,    #100
        CPL     PCA_LED                             ;Flash once per second
        POP     ACC
        POP     PSW
        RETI
;----------------------------------------
        END
```

STC MCU Limited.

11.6 Demo Program using CCP/PCA to output High Speed Pulse

There are two programs using CCP/PCA to output high speed pulse, one wrriten in C language and the other in assembly language.

1.C Program Listing

```
/*---------------------------------------------------------------------------------------------------------*/
/* --- STC MCU  Limited. ---------------------------------------------------------------------------------*/
/* --- Exam Program using CCP/PCA to output 16-bit High Speed Pulse --------------------------*/
/* --- Mobile: (86)13922805190 ---------------------------------------------------------------------*/
/* --- Fax: 86-755-82905966 ------------------------------------------------------------------------*/
/* --- Tel: 86-755-82948412 ------------------------------------------------------------------------*/
/* --- Web: www.STCMCU.com -------------------------------------------------------------------------*/
/* If you want to use the program or the program referenced in the  ----------------------------*/
/* article, please specify in which data and procedures from STC    ----------------------------*/
/*---- In Keil C development environment, select the Intel 8052 to compiling ----------------*/
/*----  And only contain < reg51.h > as header file ---------------------------------------------*/
/*---------------------------------------------------------------------------------------------------------*/

//suppose the frequency of test chip is 18.432MHz

#include "reg51.h"
#include "intrins.h"

#define   FOSC    18432000L
#define   T100KHz (FOSC / 4 / 100000)

typedef   unsigned char     BYTE;
typedef   unsigned int      WORD;
sfr       P_SW1   =         0xA2;                    //Peripheral function switch register 1

#define   CCP_S0            0x10                     //P_SW1.4
#define   CCP_S1            0x20                     //P_SW1.5

/*Declare SFR associated with the PCA */
sfr       CCON              =  0xD8;                 //PCA control register
sbit      CCF0              =  CCON^0;               //PCA module-0 interrupt flag
sbit      CCF1              =  CCON^1;               //PCA module-1 interrupt flag
sbit      CCF2              =  CCON^2;               //PCA module-2 interrupt flag
sbit      CR                =  CCON^6;               //PCA timer run control bit
sbit      CF                =  CCON^7;               //PCA timer overflow flag
sfr       CMOD              =  0xD9;                 //PCA mode register
sfr       CL                =  0xE9;                 //PCA base timer LOW
sfr       CH                =  0xF9;                 //PCA base timer HIGH
sfr       CCAPM0            =  0xDA;                 //PCA module-0 mode register
sfr       CCAP0L            =  0xEA;                 //PCA module-0 capture register LOW
sfr       CCAP0H            =  0xFA;                 //PCA module-0 capture register HIGH
```

STC MCU Limited.

```
sfr     CCAPM1      =  0xDB;                    //PCA module-1 mode register
sfr     CCAP1L      =  0xEB;                    //PCA module-1 capture register LOW
sfr     CCAP1H      =  0xFB;                    //PCA module-1 capture register HIGH
sfr     CCAPM2      =  0xDC;                    //PCA module-2 mode register
sfr     CCAP2L      =  0xEC;                    //PCA module-2 capture register LOW
sfr     CCAP2H      =  0xFC;                    //PCA module-2 capture register HIGH
sfr     PCAPWM0     =  0xf2;
sfr     PCAPWM1     =  0xf3;

sbit    PCA_LED     =  P1^0;                    //PCA test LED

BYTE    cnt;
WORD    value;

void PCA_isr( ) interrupt 7 using 1
{
        CCF0 = 0;                           //Clear interrupt flag
        CCAP0L = value;
        CCAP0H = value >> 8;                //Update compare value
        value += T100KHz;
}

void main()
{
        ACC  =  P_SW1;
        ACC  &= ~(CCP_S0 | CCP_S1);         //CCP_S0=0 CCP_S1=0
        P_SW1 = ACC;                        //(P1.2/ECI, P1.1/CCP0, P1.0/CCP1, P3.7/CCP2)

//      ACC  =  P_SW1;
//      ACC  &= ~(CCP_S0 | CCP_S1);         //CCP_S0=1 CCP_S1=0
//      ACC  |= CCP_S0;             //(P3.4/ECI_2, P3.5/CCP0_2, P3.6/CCP1_2, P3.7/CCP2_2)
//      P_SW1 = ACC;
//
//      ACC  =  P_SW1;
//      ACC  &= ~(CCP_S0 | CCP_S1);         //CCP_S0=0 CCP_S1=1
//      ACC  |= CCP_S1;             //(P2.4/ECI_3, P2.5/CCP0_3, P2.6/CCP1_3, P2.7/CCP2_3)
//      P_SW1 = ACC;
        CCON = 0;                           //Initial PCA control register
                                            //PCA timer stop running
                                            //Clear CF flag
                                            //Clear all module interrupt flag
        CL = 0;                             //Reset PCA base timer
        CH = 0;
```

STC MCU Limited.

```
    CMOD = 0x02;                    //Set PCA timer clock source as Fosc/2
                                    //Disable PCA timer overflow interrupt
    value = T100KHz;
    CCAP0L = value;                 //P1.3 output 100KHz square wave
    CCAP0H = value >> 8;            //Initial PCA module-0
    value += T100KHz;
    CCAPM0 = 0x4d;                  //PCA module-0 work in 16-bit timer mode
                                    //and enable PCA interrupt, toggle the output pin CCP0(P1.3)

    CR = 1;                         //PCA timer start run
    EA = 1;
    cnt = 0;

    while (1);
}
```

STC MCU Limited.

2. Assembler Listing

```
/*---------------------------------------------------------------------------------------------------*/
/* --- STC MCU  Limited. ---------------------------------------------------------------------------*/
/* --- Exam Program using CCP/PCA to output 16-bit High Speed Pulse --------------------------*/
/* --- Mobile: (86)13922805190 ---------------------------------------------------------------------*/
/* --- Fax: 86-755-82905966 ------------------------------------------------------------------------*/
/* --- Tel: 86-755-82948412 ------------------------------------------------------------------------*/
/* --- Web: www.STCMCU.com -------------------------------------------------------------------------*/
/* If you want to use the program or the program referenced in the  ----------------------------*/
/* article, please specify in which data and procedures from STC    ----------------------------*/
/*---- In Keil C development environment, select the Intel 8052 to compiling ----------------*/
/*----  And only contain < reg51.h > as header file ------------------------------------------*/
/*---------------------------------------------------------------------------------------------------*/

//suppose the frequency of test chip is 18.432MHz

T100KHz         EQU     2EH             ;(18432000 / 4 / 100000)
P_SW1           EQU     0A2H            ;Peripheral function switch register1

CCP_S0          EQU     10H             ;P_SW1.4
CCP_S1          EQU     20H             ;P_SW1.5

;/*Declare SFR associated with the PCA */
CCON            EQU     0D8H            ;PCA control register
CCF0            BIT     CCON.0          ;PCA module-0 interrupt flag
CCF1            BIT     CCON.1          ;PCA module-1 interrupt flag
CCF2            BIT     CCON.2          ;PCA module-2 interrupt flag
```

```
CR              BIT     CCON.6          ;PCA timer run control bit
CF              BIT     CCON.7          ;PCA timer overflow flag
CMOD            EQU     0D9H            ;PCA mode register
CL              EQU     0E9H            ;PCA base timer LOW
CH              EQU     0F9H            ;PCA base timer HIGH
CCAPM0          EQU     0DAH            ;PCA module-0 mode register
CCAP0L          EQU     0EAH            ;PCA module-0 capture register LOW
CCAP0H          EQU     0FAH            ;PCA module-0 capture register HIGH
CCAPM1          EQU     0DBH            ;PCA module-1 mode register
CCAP1L          EQU     0EBH            ;PCA module-1 capture register LOW
CCAP1H          EQU     0FBH            ;PCA module-1 capture register HIGH
CCAPM2          EQU     0DCH            ;PCA module-2 mode register
CCAP2L          EQU     0ECH            ;PCA module-2 capture register LOW
CCAP2H          EQU     0FCH            ;PCA module-2 capture register HIGH

;--------------------------------------

        ORG     0000H
        LJMP    MAIN

        ORG     003BH
PCA_ISR:
        PUSH    PSW
        PUSH    ACC
        CLR     CCF0                    ;Clear interrupt flag
        MOV     A,      CCAP0L
        ADD     A,      #T100KHz        ;Update compare value
        MOV     CCAP0L,         A
        CLR     A
        ADDC    A,      CCAP0H
        MOV     CCAP0H,         A

PCA_ISR_EXIT:
        POP     ACC
        POP     PSW
        RETI

;--------------------------------------

        ORG     0100H
MOV     A,      P_SW1
        ANL     A,      #0CFH                   //CCP_S0=0 CCP_S1=0
        MOV     P_SW1,  A                       //(P1.2/ECI, P1.1/CCP0, P1.0/CCP1, P3.7/CCP2)
```

STC MCU Limited.

```
//      MOV     A,      P_SW1
//      ANL     A,      #0CFH                   //CCP_S0=1 CCP_S1=0
//      ORL     A,      #CCP_S0         //(P3.4/ECI_2, P3.5/CCP0_2, P3.6/CCP1_2, P3.7/CCP2_2)
//      MOV     P_SW1,  A

//
//      MOV     A,      P_SW1
//      ANL     A,      #0CFH                   //CCP_S0=0 CCP_S1=1
//      ORL     A,      #CCP_S1         //(P2.4/ECI_3, P2.5/CCP0_3, P2.6/CCP1_3, P2.7/CCP2_3)
//      MOV     P_SW1,  A

        MOV     CCON,   #0                      ;Initial PCA control register
                                                ;PCA timer stop running
                                                ;Clear CF flag
                                                ;Clear all module interrupt flag
        CLR     A                               ;
        MOV     CL,     A                       ;Reset PCA base timer
        MOV     CH,     A                       ;

        MOV     CMOD,   #02H                    ;Set PCA timer clock source as Fosc/2
                                                ;Disable PCA timer overflow interrupt
;-------------------------------------------------------------------------
        MOV     CCAP0L, #T100KHz        ;P1.3 output 100KHz square wave
        MOV     CCAP0H, #0              ;Initial PCA module-0
        MOV     CCAPM0, #4dH            ;PCA module-0 work in 16-bit timer mode and enable
                                        ;PCA interrupt, toggle the output pin CEX0(P1.3)
;-------------------------------------------------------------------------
        SETB    CR                      ;PCA timer start run
        SETB    EA

        SJMP    $
;-------------------------------------------------------------------------
        END
```

STC MCU Limited

11.7 Demo Program for CCP/PCA Outputing PWM (6+7+8 bit)

1.C Program Listing

```
/*---------------------------------------------------------------------------------------------------------*/
/* --- STC MCU  Limited. ---------------------------------------------------------------------------------*/
/* --- Exam Program using CCP/PCA to output PWM (6-bit / 7-bit / 8-bit) ----------------------*/
/* --- Mobile: (86)13922805190 ---------------------------------------------------------------------------*/
/* --- Fax: 86-755-82905966 ------------------------------------------------------------------------------*/
/* --- Tel: 86-755-82948412 ------------------------------------------------------------------------------*/
/* --- Web: www.STCMCU.com -------------------------------------------------------------------------------*/
/* If you want to use the program or the program referenced in the  ----------------------------*/
/* article, please specify in which data and procedures from STC    ----------------------------*/
/*---- In Keil C development environment, select the Intel 8052 to compiling ------------------*/
/*----  And only contain < reg51.h > as header file ---------------------------------------------*/
/*---------------------------------------------------------------------------------------------------------*/

//suppose the frequency of test chip is 18.432MHz

#include "reg51.h"
#include "intrins.h"

#define   FOSC    18432000L

typedef   unsigned char   BYTE;
typedef   unsigned int    WORD;

sfr       P_SW1   =       0xA2;                   //Peripheral function switch register 1

#define   CCP_S0          0x10                    //P_SW1.4
#define   CCP_S1          0x20                    //P_SW1.5

/*Declare SFR associated with the PCA */
sfr       CCON            =   0xD8;               //PCA control register
sbit      CCF0            =   CCON^0;             //PCA module-0 interrupt flag
sbit      CCF1            =   CCON^1;             //PCA module-1 interrupt flag
sbit      CCF2            =   CCON^2;             //PCA module-2 interrupt flag
sbit      CR              =   CCON^6;             //PCA timer run control bit
sbit      CF              =   CCON^7;             //PCA timer overflow flag
sfr       CMOD            =   0xD9;               //PCA mode register
sfr       CL              =   0xE9;               //PCA base timer LOW
sfr       CH              =   0xF9;               //PCA base timer HIGH
sfr       CCAPM0          =   0xDA;               //PCA module-0 mode register
sfr       CCAP0L          =   0xEA;               //PCA module-0 capture register LOW
sfr       CCAP0H          =   0xFA;               //PCA module-0 capture register HIGH
```

STC MCU Limited.

```
sfr     CCAPM1      =     0xDB;          //PCA module-1 mode register
sfr     CCAP1L      =     0xEB;          //PCA module-1 capture register LOW
sfr     CCAP1H      =     0xFB;          //PCA module-1 capture register HIGH
sfr     CCAPM2      =     0xDC;          //PCA module-2 mode register
sfr     CCAP2L      =     0xEC;          //PCA module-2 capture register LOW
sfr     CCAP2H      =     0xFC;          //PCA module-2 capture register HIGH
sfr     PCAPWM0     =     0xf2;
sfr     PCAPWM1     =     0xf3;
sfr     PCAPWM2     =     0xf4;

void main()
{
        ACC     =     P_SW1;
        ACC     &=    ~(CCP_S0 | CCP_S1);     //CCP_S0=0 CCP_S1=0
        P_SW1   =     ACC;                    //(P1.2/ECI, P1.1/CCP0, P1.0/CCP1, P3.7/CCP2)

//      ACC     =     P_SW1;
//      ACC     &=    ~(CCP_S0 | CCP_S1);     //CCP_S0=1 CCP_S1=0
//      ACC     |=    CCP_S0;          //(P3.4/ECI_2, P3.5/CCP0_2, P3.6/CCP1_2, P3.7/CCP2_2)
//      P_SW1   =     ACC;
//
//      ACC     =     P_SW1;
//      ACC     &=    ~(CCP_S0 | CCP_S1);     //CCP_S0=0 CCP_S1=1
//      ACC     |=    CCP_S1;          //(P2.4/ECI_3, P2.5/CCP0_3, P2.6/CCP1_3, P2.7/CCP2_3)
//      P_SW1   =     ACC;

        CCON    =     0;                      //Initial PCA control register
                                              //PCA timer stop running
                                              //Clear CF flag
                                              //Clear all module interrupt flag
        CL = 0;                               //Reset PCA base timer
        CH      =     0;
        CMOD = 0x02;                          //Set PCA timer clock source as Fosc/2
                                              //Disable PCA timer overflow interrupt
        PCA_PWM0      =     0x00;             //PCA module 0 work in 8-bit PWM
        CCAP0H  =  CCAP0L  =  0x20;           //PWM0 port output 87.5% ((100H-20H)/100H)
                                              //duty cycle square wave
        CCAPM0        =     0x42;             //PCA module 0 work in 8-bit PWM
                                              //and no PCA interrupt

        PCA_PWM1 = 0x40;                      //PCA module 1 work in 7-bit PWM
        CCAP1H = CCAP1L = 0x20;               //PWM1 port output 75% ((80H-20H)/80H)
                                              //duty cycle square wave
        CCAPM1 = 0x42;                        //PCA module 1 work in 7-bit PWM
                                              //and no PCA interrupt
```

STC MCU Limited

```
    PCA_PWM2 = 0x80;                    //PCA module 2 work in 6-bit PWM
    CCAP2H = CCAP2L = 0x20;             //PWM2 port output 50% ((40H-20H)/40H)
                                        //duty cycle square wave
    CCAPM2 = 0x42;                      //PCA module 2 work in 6-bit PWM
                                        //and no PCA interrupt
    CR = 1;                             //PCA timer start run

    while (1);
}
```

2. Assembler Listing

```
/*---------------------------------------------------------------------------------------------------*/
/* --- STC MCU  Limited. ---------------------------------------------------------------------------*/
/* --- Exam Program using CCP/PCA to output PWM (6-bit / 7-bit / 8-bit) ----------------------------*/
/* --- Mobile: (86)13922805190 ---------------------------------------------------------------------*/
/* --- Fax: 86-755-82905966 ------------------------------------------------------------------------*/
/* --- Tel: 86-755-82948412 ------------------------------------------------------------------------*/
/* --- Web: www.STCMCU.com -------------------------------------------------------------------------*/
/* If you want to use the program or the program referenced in the  ----------------------------*/
/* article, please specify in which data and procedures from STC    ----------------------------*/
/*---- In Keil C development environment, select the Intel 8052 to compiling ----------------*/
/*----  And only contain < reg51.h > as header file ------------------------------------------*/
/*---------------------------------------------------------------------------------------------------*/

//suppose the frequency of test chip is 18.432MHz

P_SW1       EQU     0A2H            ;Peripheral function switch register1

CCP_S0      EQU     10H             ;P_SW1.4
CCP_S1      EQU     20H             ;P_SW1.5

;/*Declare SFR associated with the PCA */
CCON        EQU     0D8H        ;PCA control register
CCF0        BIT     CCON.0      ;PCA module-0 interrupt flag
CCF1        BIT     CCON.1      ;PCA module-1 interrupt flag
CCF2        BIT     CCON.2      ;PCA module-2 interrupt flag
CR          BIT     CCON.6      ;PCA timer run control bit
CF          BIT     CCON.7      ;PCA timer overflow flag
CMOD        EQU     0D9H        ;PCA mode register
CL          EQU     0E9H        ;PCA base timer LOW
CH          EQU     0F9H        ;PCA base timer HIGH
CCAPM0      EQU     0DAH        ;PCA module-0 mode register
CCAP0L      EQU     0EAH        ;PCA module-0 capture register LOW
CCAP0H      EQU     0FAH        ;PCA module-0 capture register HIGH
```

STC MCU Limited.

```
CCAPM1      EQU   0DBH        ;PCA module-1 mode register
CCAP1L      EQU   0EBH        ;PCA module-1 capture register LOW
CCAP1H      EQU   0FBH        ;PCA module-1 capture register HIGH
CCAPM2      EQU   0DCH        ;PCA module-2 mode register
CCAP2L      EQU   0ECH        ;PCA module-2 capture register LOW
CCAP2H      EQU   0FCH        ;PCA module-2 capture register HIGH
PCA_PWM0    EQU   0F2H
PCA_PWM1    EQU   0F3H
PCA_PWM2    EQU   0F4H

;----------------------------------------
        ORG   0000H
        LJMP  MAIN
;----------------------------------------
        ORG   0100H
MAIN:
        MOV   A,    P_SW1
        ANL   A,    #0CFH               //CCP_S0=0 CCP_S1=0
        MOV   P_SW1, A                  //(P1.2/ECI, P1.1/CCP0, P1.0/CCP1, P3.7/CCP2)

//      MOV   A,    P_SW1
//      ANL   A,    #0CFH               //CCP_S0=1 CCP_S1=0
//      ORL   A,    #CCP_S0             //(P3.4/ECI_2, P3.5/CCP0_2, P3.6/CCP1_2, P3.7/CCP2_2)
//      MOV   P_SW1, A
//
//      MOV   A,    P_SW1
//      ANL   A,    #0CFH               //CCP_S0=0 CCP_S1=1
//      ORL   A,    #CCP_S1             //(P2.4/ECI_3, P2.5/CCP0_3, P2.6/CCP1_3, P2.7/CCP2_3)
//      MOV   P_SW1, A

        MOV   CCON, #0                  ;Initial PCA control register
                                        ;PCA timer stop running
                                        ;Clear CF flag
                                        ;Clear all module interrupt flag
        CLR   A                         ;Reset PCA base timer
        MOV   CL,   A                   ;
        MOV   CH,   A                   ;
        MOV   CMOD, #02H                ;Set PCA timer clock source as Fosc/2
                                        ;Disable PCA timer overflow interrupt
;--------------------------------
        MOV   PCA_PWM0,     #00H        ;PCA module 0 work in 8-bit PWM
        MOV   A,            #020H       ;
        MOV   CCAP0H,       A           ;PWM0 port output 87.5% ((100H-20H)/100H)
                                        ;duty cycle square wave
```

STC MCU Limited.

```
        MOV     CCAP0L,         A               ;
        MOV     CCAPM0,         #42H            ;PCA module-0 work in 8-bit PWM mode
                                                ;and no PCA interrupt
;-------------------------------
        MOV     PCA_PWM1,       #40H            ;PCA module 1 work in 7-bit PWM
        MOV     A,              #020H           ;
        MOV     CCAP1H,         A               ;PWM1 port output 75% ((80H-20H)/80H)
                                                ;duty cycle square wave
        MOV     CCAP1L,         A               ;
        MOV     CCAPM1,         #42H            ;PCA module-1 work in 7-bit PWM mode
                                                ;and no PCA interrupt
;-------------------------------
        MOV     PCA_PWM2,       #80H            ;PCA module 1 work in 6-bit PWM
        MOV     A,              #020H           ;
        MOV     CCAP2H,         A               ;PWM2 port output 50% ((40H-20H)/40H)
                                                ;duty cycle square wave
        MOV     CCAP2L,         A               ;
        MOV     CCAPM2,         #42H            ;PCA module-2 work in 6-bit PWM mode
;-------------------------------
        SETB    CR                              ;PCA timer start run

        SJMP    $
;---------------------------------------
        END
```

STC MCU Limited

11.8 Program achieving 9~16 bit PWM Output by CCP/PCA

```
/*---------------------------------------------------------------------------------------------------------*/
/* --- STC MCU  Limited. ---------------------------------------------------------------------------------*/
/* --- Exam Program that utilize CCP/PCA to achieve 9~16 bit PWM by software plus hardware -*/
/* --- Mobile: (86)13922805190 ---------------------------------------------------------------------------*/
/* --- Fax: 86-755-82905966 ------------------------------------------------------------------------------*/
/* --- Tel: 86-755-82948412 ------------------------------------------------------------------------------*/
/* --- Web: www.STCMCU.com -------------------------------------------------------------------------------*/
/* If you want to use the program or the program referenced in the  ----------------------------------*/
/* article, please specify in which data and procedures from STC    ----------------------------------*/
/*---- In Keil C development environment, select the Intel 8052 to compiling ----------------------*/
/*----  And only contain < reg51.h > as header file ------------------------------------------------*/
/*---------------------------------------------------------------------------------------------------------*/

/**************     the description of functions                ***************
realize n-bit PWM by PCA
*****************************************************/

#include  "PWMn.h"

//=========================================================================
// file: PWMn_main.c
// function: test PWM
// edition: VER1.0
// data: 2011-4-11
//
//=========================================================================

/**************     function declaration            ***************

Simulate 9~16bit PWM by PCA
STC12C5201AD series output PWM on PCA0/P3.7
STC12C5A60S2 series output PWM on PCA0/P1.3
Fosc=24.576MHZ.  output 6000HZ 12bit PWM。

*****************************************/

/************* construction document
PWMn.c
PWMn_main.c
******************/

/**************     declare local constant          ***************/
/**************     declare local variable          ***************/

unsigned int          pwm;
/**************     declare local Function          ***************/
void  delay_ms(unsigned char ms);
```

STC MCU Limited.

```
/*****************  declare external Function and external variable ******************/
extern unsigned int PWM_high;
void PWMn_SetHighReg(unsigned int high);
void PWMn_init(unsigned int high);

/********************* main function ***************************/
//========================================================================
// function: void main(void)
// description: keep on updating the value of PWM
// parameter: none
// return: none
//  edition: VER1.0
// data: 2011-4-11
//========================================================================
void main(void)
{
        pwm = 1000;                             //pwm initial value
        pwm = PWM_HIGH_MIN;                     //pwm initial value
        PWMn_init(pwm);                         //Initialize pwm

        while (1)
        {
                delay_ms(10);                   //delay
                pwm += 10;
                if(pwm >= PWM_HIGH_MAX)         pwm = PWM_HIGH_MIN;
                PWMn_SetHighReg(pwm);           //update PWM duty cycle
        }
}

/**********************************************/

//========================================================================
// function: void  delay_ms(unsigned char ms)
// description: delay function
// parameter: ms
// return: none
//  edition: VER1.0
// data: 2011-4-11
//========================================================================
void  delay_ms(unsigned char ms)
{
    unsigned int i;
         do
         {
                i = MAIN_Fosc / 14000L;     //1T
                while(--i) ;
        }while(--ms);
}
```

STC MCU Limited.

```
unsigned int        PWM_high;       //define PWM duty cycle
unsigned int        PWM_low;
unsigned int        CCAP0_tmp;

//=========================================================================
// function: void PWMn_SetHighReg(unsigned int high)
// description: write the duty ratio data。
// parameter: high:  duty ratio data
// return: none
// edition: VER1.0
// data: 2009-12-30
//=========================================================================

void PWMn_SetHighReg(unsigned int high)
{
        if(high > PWM_HIGH_MAX)
                high = PWM_HIGH_MAX;
        if(high < PWM_HIGH_MIN)
                high = PWM_HIGH_MIN;
        CR = 0;                         //disable PCA。
        PWM_high = high;
        PWM_low = PWM_DUTY - high;
        CR = 1;                         //run PCA。
}

//=========================================================================
// function: void PWMn_init(unsigned int high)
// description: initialize
// parameter: high:  initialize the duty ratio data
// return: none
// edition: VER1.0
// data: 2009-12-30
//=========================================================================

void PWMn_init(unsigned int high)
{
        #ifdef  STC12C5201AD
                P3M1 &= ~0x80,  P3M0 |=  0x80;          //CCAP0 in PUSH-PULL output mode
                                                        //STC12C5201AD CCP on P3.7
        #else
                P1M1 &= ~0x08,  P1M0 |=  0x08;          //CCAP0 in PUSH-PULL output mode
                                                        //STC12C5A60S2 CCP on P1.3
        #endif
        CCON = 0;                                       //clear CF、CR、CCF0、CCF1
```

STC MCU Limited.

```
	IPH |= 0x80;                                    //PCA interrupt in the highest priority
	PPCA = 1;

	CMOD = (PCA_IDLE_DISABLE << 7) | (PCA_SOURCE_SELECT << 1);
	CCAPM0 = 0x4D;                  //high-speed output mode,enable interrupt(ECCF0=1)。
	CL = 0;                         //clear PCA regisrers
	CH = 0;
	CCAP0_tmp = 0;
	PWMn_SetHighReg(high);          //initialize duty ratio data
	CR = 1;                         //run PCA
	EA = 1;                         //enable global interrupt
}

//========================================================================
// Function: void PCA_interrupt (void) interrupt 7
// description: PCA interrupt service routine。
// parameter: none
// return: none
// edition: VER1.0
// data: 2009-12-30
//========================================================================

void PCA_interrupt (void) interrupt 7
{
	if(CCF0 == 1)                   //PCA module 0 interrupt
	{
		CCF0 = 0;               //clear PCA module 0 interrupt flag

		if(CCP0 == 1)       CCAP0_tmp += PWM_high;
		else        CCAP0_tmp += PWM_low;

		CCAP0L = (unsigned char)CCAP0_tmp;
		CCAP0H = (unsigned char)(CCAP0_tmp >> 8);
	}
/*
	else if(CCF1 == 1)                                      //PCA module 1 interrupt
	{
		CCF1 = 0;                                       //Clear PCA module 1 interrupt flag
	}
	else if(CF == 1)                                        //PCA overflow interrupt
	{
		CF = 0;                                         //clear PCA overflow interrupt flag
	}
*/
}
```

STC MCU Limited.

11.9 Demo Program of CCP/PCA 16-bit Capture Mode

There are two programs utilizing CCP/PCA 16-bit capture mode to measure pulse width, one wrriten in C language and the other in assembly language.

1.C Program Listing

```
/*---------------------------------------------------------------------------------------------------*/
/* --- STC MCU Limited. ----------------------------------------------------------------------------*/
/* --- Exam Program utilizing 16-bit capture mode of CCP/PCA to measure pulse width -----*/
/* --- Mobile: (86)13922805190 ---------------------------------------------------------------------*/
/* --- Fax: 86-755-82905966 ------------------------------------------------------------------------*/
/* --- Tel: 86-755-82948412 ------------------------------------------------------------------------*/
/* --- Web: www.STCMCU.com -------------------------------------------------------------------------*/
/* If you want to use the program or the program referenced in the  ----------------------------*/
/* article, please specify in which data and procedures from STC    ----------------------------*/
/*---- In Keil C development environment, select the Intel 8052 to compiling ---------------------*/
/*----  And only contain < reg51.h > as header file ----------------------------------------------*/
/*---------------------------------------------------------------------------------------------------*/

//suppose the frequency of test chip is 18.432MHz

#include "reg51.h"
#include "intrins.h"

#define   FOSC    18432000L

typedef unsigned char   BYTE;
typedef unsigned int    WORD;
typedef unsigned long   DWORD;

sfr       P_SW1   =     0xA2;                    //Peripheral function switch register 1

#define   CCP_S0        0x10                     //P_SW1.4
#define   CCP_S1        0x20                     //P_SW1.5

/*Declare SFR associated with the PCA */
sfr       CCON          =  0xD8;                 //PCA control register
sbit      CCF0          =  CCON^0;               //PCA module-0 interrupt flag
sbit      CCF1          =  CCON^1;               //PCA module-1 interrupt flag
sbit      CCF2          =  CCON^2;               //PCA module-2 interrupt flag
sbit      CR            =  CCON^6;               //PCA timer run control bit
sbit      CF            =  CCON^7;               //PCA timer overflow flag
sfr       CMOD          =  0xD9;                 //PCA mode register
sfr       CL            =  0xE9;                 //PCA base timer LOW
sfr       CH            =  0xF9;                 //PCA base timer HIGH
sfr       CCAPM0        =  0xDA;                 //PCA module-0 mode register
sfr       CCAP0L        =  0xEA;                 //PCA module-0 capture register LOW
sfr       CCAP0H        =  0xFA;                 //PCA module-0 capture register HIGH
```

STC MCU Limited.

```
sfr     CCAPM1      =  0xDB;                    //PCA module-1 mode register
sfr     CCAP1L      =  0xEB;                    //PCA module-1 capture register LOW
sfr     CCAP1H      =  0xFB;                    //PCA module-1 capture register HIGH
sfr     CCAPM2      =  0xDC;                    //PCA module-2 mode register
sfr     CCAP2L      =  0xEC;                    //PCA module-2 capture register LOW
sfr     CCAP2H      =  0xFC;                    //PCA module-2 capture register HIGH
sfr     PCAPWM0     =  0xf2;
sfr     PCAPWM1     =  0xf3;
sfr     PCA_PWM2    =  0xf4;

BYTE    cnt;
DWORD count0;
DWORD count1;
DWORD length;

void main()
{
        ACC     =       P_SW1;
        ACC     &=      ~(CCP_S0 | CCP_S1);     //CCP_S0=0 CCP_S1=0
        P_SW1   =       ACC;                    //(P1.2/ECI, P1.1/CCP0, P1.0/CCP1, P3.7/CCP2)

//      ACC     =       P_SW1;
//      ACC     &=      ~(CCP_S0 | CCP_S1);     //CCP_S0=1 CCP_S1=0
//      ACC     |=      CCP_S0;         //(P3.4/ECI_2, P3.5/CCP0_2, P3.6/CCP1_2, P3.7/CCP2_2)
//      P_SW1   =       ACC;
//
//      ACC     =       P_SW1;
//      ACC     &=      ~(CCP_S0 | CCP_S1);     //CCP_S0=0 CCP_S1=1
//      ACC     |=      CCP_S1;         //(P2.4/ECI_3, P2.5/CCP0_3, P2.6/CCP1_3, P2.7/CCP2_3)
//      P_SW1   =       ACC;

        CCON = 0;                       //Initial PCA control register
                                        //PCA timer stop running
                                        //Clear CF flag
                                        //Clear all module interrupt flag
        CL = 0;                         //Reset PCA base timer
        CH      =       0;
        CCAP0L =        0;
        CCAP0H =        0;
        CMOD    =       0x09;           //Set SYSclk as the PCA clock source,
                                        //and enable PCA overflow interrupt
        CCAPM0=         0x21;           //PCA module 0 work in 16-bit capture mode
                                        //(capture triggered by the rising edge on CCPn/PCAn pin)
                                        // and enable capture interrupt
```

STC MCU Limited.

```
        //      CCAPM0=     0x11;   //PCAmodule 0 work in 16-bit capture mode
                                    //(capture triggered by the falling edge on CCPn/PCAn pin)
                                    // and enable capture interrupt

        //      CCAPM0=     0x31;   //PCAmodule 0 work in 16-bit capture mode
                                    //(capture triggered by the  transition on CCPn/PCAn pin)
                                    // and enable capture interrupt

        CR      =       1;          //PCA timer start run

        EA      =       1;

        cnt     =       0;
        count0  =       0;
        count1  =       0;

        while (1);
}

void PCA_isr() interrupt 7 using 1
{
         if (CF)
        {
                CF = 0;
                cnt++;                          //PCA overflow times +1
        }
        if (CCF0)
        {
                CCF0 = 0;
                count0 = count1;
                ((BYTE *)&count1)[3] = CCAP0L;
                ((BYTE *)&count1)[2] = CCAP0H;
                ((BYTE *)&count1)[1] = cnt;
                ((BYTE *)&count1)[0] = 0;
                length = count1 - count0;
        }
}
```

STC MCU Limited.

2. Assembler Listing

```
/*---------------------------------------------------------------------------------------------------*/
/* --- STC MCU  Limited. ---------------------------------------------------------------------------*/
/* --- Exam Program utilizing 16-bit capture mode of CCP/PCA to measure pulse width -----*/
/* --- Mobile: (86)13922805190 ---------------------------------------------------------------------*/
/* --- Fax: 86-755-82905966 ------------------------------------------------------------------------*/
/* --- Tel: 86-755-82948412 ------------------------------------------------------------------------*/
/* --- Web: www.STCMCU.com -------------------------------------------------------------------------*/
/* If you want to use the program or the program referenced in the  ----------------------------*/
/* article, please specify in which data and procedures from STC    ----------------------------*/
/*---- In Keil C development environment, select the Intel 8052 to compiling ------------------*/
/*----  And only contain < reg51.h > as header file ------------------------------------------------*/
/*---------------------------------------------------------------------------------------------------*/

//suppose the frequency of test chip is 18.432MHz

P_SW1           EQU     0A2H                    ;Peripheral function switch register1

CCP_S0          EQU     10H                     ;P_SW1.4
CCP_S1          EQU     20H                     ;P_SW1.5

;/*Declare SFR associated with the PCA */
CCON            EQU     0D8H            ;PCA control register
CCF0            BIT     CCON.0          ;PCA module-0 interrupt flag
CCF1            BIT     CCON.1          ;PCA module-1 interrupt flag
CCF2            BIT     CCON.2          ;PCA module-2 interrupt flag
CR              BIT     CCON.6          ;PCA timer run control bit
CF              BIT     CCON.7          ;PCA timer overflow flag
CMOD            EQU     0D9H            ;PCA mode register
CL              EQU     0E9H            ;PCA base timer LOW
CH              EQU     0F9H            ;PCA base timer HIGH
CCAPM0          EQU     0DAH            ;PCA module-0 mode register
CCAP0L          EQU     0EAH            ;PCA module-0 capture register LOW
CCAP0H          EQU     0FAH            ;PCA module-0 capture register HIGH
CCAPM1          EQU     0DBH            ;PCA module-1 mode register
CCAP1L          EQU     0EBH            ;PCA module-1 capture register LOW
CCAP1H          EQU     0FBH            ;PCA module-1 capture register HIGH
CCAPM2          EQU     0DCH            ;PCA module-2 mode register
CCAP2L          EQU     0ECH            ;PCA module-2 capture register LOW
CCAP2H          EQU     0FCH            ;PCA module-2 capture register HIGH
PCA_PWM0        EQU     0F2H
PCA_PWM1        EQU     0F3H
PCA_PWM2        EQU     0F4H
```

STC MCU Limited.

```
CNT             EQU     30H
COUNT0          EQU     31H
COUNT1          EQU     34H
LENGTH          EQU     37H

;---------------------------------------
        ORG     0000H
        LJMP    MAIN
        ORG     003BH
PCA_ISR:
        PUSH    PSW
        PUSH    ACC
        JNB     CF,     CKECK_CCF0
        CLR     CF
        INC     CNT
CKECK_CCF0:
        JNB     CCF0,   PCA_ISR_EXIT
        CLR     CCF0
        MOV     COUNT0,         COUNT1
        MOV     COUNT0+1,       COUNT1+1
        MOV     COUNT0+2,       COUNT1+2
        MOV     COUNT1,         CNT
        MOV     COUNT1+1,       CCAP0H
        MOV     COUNT1+2,       CCAP0L
        CLR     C
        MOV     A,      COUNT1+2
        SUBB    A,      COUNT0+2
        MOV     LENGTH+2,       A
        MOV     A,      COUNT1+1
        SUBB    A,      COUNT0+1
        MOV     LENGTH+1,       A
        MOV     A,      COUNT1
        SUBB    A,      COUNT0
        MOV     LENGTH,         A
PCA_ISR_EXIT:
        POP     ACC
        POP     PSW
        RETI

;---------------------------------------

        ORG     0100H
MAIN:
        MOV     SP,     #5FH
```

STC MCU Limited.

```
        MOV     A,      P_SW1
        ANL     A,      #0CFH                   //CCP_S0=0 CCP_S1=0
        MOV     P_SW1,  A                       //(P1.2/ECI, P1.1/CCP0, P1.0/CCP1, P3.7/CCP2)

//      MOV     A,      P_SW1
//      ANL     A,      #0CFH                   //CCP_S0=1 CCP_S1=0
//      ORL     A,      #CCP_S0                 //(P3.4/ECI_2, P3.5/CCP0_2, P3.6/CCP1_2, P3.7/CCP2_2)
//      MOV     P_SW1,  A
//
//      MOV     A,      P_SW1
//      ANL     A,      #0CFH                   //CCP_S0=0 CCP_S1=1
//      ORL     A,      #CCP_S1                 //(P2.4/ECI_3, P2.5/CCP0_3, P2.6/CCP1_3, P2.7/CCP2_3)
//      MOV     P_SW1,  A

        MOV     CCON,   #0                      ;Initial PCA control register
                                                ;PCA timer stop running
                                                ;Clear CF flag
                                                ;Clear all module interrupt flag
        CLR     A                               ;
        MOV     CL,     A                       ;Reset PCA base timer
        MOV     CH,     A                       ;
        MOV     CCAP0L,         A
        MOV     CCAP0H,         A
        MOV     CMOD,   #09H            ;Set SYSclk as the PCA clock source,
                                        ;and enable PCA overflow interrupt

        MOV     CCAPM0,         #21H    ;PCA module 0 work in 16-bit capture mode
                                        ;(capture triggered by the rising edge on CCPn/PCAn pin)
                                        ; and enable capture interrupt

        MOV     CCAPM0,         #11H    ;PCAmodule 0 work in 16-bit capture mode
                                        ;(capture triggered by the falling edge on CCPn/PCAn pin)
                                        ; and enable capture interrupt

        MOV     CCAPM0,         #31H    ;PCAmodule 0 work in 16-bit capture mode
                                        ;(capture triggered by the  transition on CCPn/PCAn pin)
                                        ;and enable capture interrupt

        SETB    CR                              ;PCA timer start run
        SETB    EA

        CLR     A                               ;Initialize variables
        MOV     CNT,    A
```

STC MCU Limited.

```
        MOV     COUNT0,         A
        MOV     COUNT0+1,       A
        MOV     COUNT0+2,       A
        MOV     COUNT1,         A
        MOV     COUNT1+1,       A
        MOV     COUNT1+2,       A
        MOV     LENGTH,         A
        MOV     LENGTH+1,       A
        MOV     LENGTH+2,       A

        SJMP    $
;---------------------------------------
        END
```

STC MCU Limited.

11.10 Demo Program using T0 to Simulate 10 or 16 bits PWM ——T0 as 16-bit Auto-Reload Timer/Counter

1. C Program Listing

```
/*---------------------------------------------------------------------------------------------------*/
/* --- STC MCU  Limited. ---------------------------------------------------------------------------*/
/* --- Exam Program using 16-bit auto-reload timer/counter to simulate 10 or 16 bits PWM -*/
/* --- Mobile: (86)13922805190 ---------------------------------------------------------------------*/
/* --- Fax: 86-755-82905966 ------------------------------------------------------------------------*/
/* --- Tel: 86-755-82948412 ------------------------------------------------------------------------*/
/* --- Web: www.STCMCU.com -------------------------------------------------------------------------*/
/* If you want to use the program or the program referenced in the  ----------------------------*/
/* article, please specify in which data and procedures from STC    ----------------------------*/
/*---- In Keil C development environment, select the Intel 8052 to compiling ---------------------*/
/*----  And only contain < reg51.h > as header file ----------------------------------------------*/
/*---------------------------------------------------------------------------------------------------*/

//suppose the frequency of test chip is 18.432MHz

#include "reg51.h"

//#define  PWM6BIT        64                      //6-bit PWM periodicity
#define   PWM8BIT        256                     //8-bit PWM periodicity
//#define  PWM10BIT       1024                    //10-bit PWM periodicity
//#define  PWM16BIT       65536                   //16-bit PWM periodicity

#define   HIGHDUTY       64                      // high duty (duty ratio 64/256=25%)
#define   LOWDUTY        (PWM8BIT-HIGHDUTY)      //low duty

sfr       AUXR           =       0x8e;           //Auxiliary register
sfr       INT_CLKO       =       0x8f;           //Clock Output register
sbit      T0CLKO         =       P3^5;           //T0 Clock Output

bit       flag;

// Timer 0 interrupt service routine
void tm0() interrupt 1
{
        flag = !flag;
        if (flag)
        {
                TL0 = (65536-HIGHDUTY);
                TH0 = (65536-HIGHDUTY) >> 8;
        }
        else
        {
                TL0 = (65536-LOWDUTY);
                TH0 = (65536-LOWDUTY) >> 8;
        }
}
```

STC MCU Limited.

```
void main()
{
    AUXR    =   0x80;                   //T0 in 1T mode
    INT_CLKO    =   0x01;               //enable the function of Timer 0 Clock Output
    TMOD    &=  0xf0;                   //T0 in mode 0(16-bit auto-reload timer/counter)
    TL0     =   (65536-LOWDUTY);        //initialize the reload value
    TH0     =   (65536-LOWDUTY) >> 8;
    T0CLKO  =   1;                      //initialize the pin of clock output (soft PWM port)
    flag    =   0;
    TR0     =   1;                      //run Timer 0
    ET0     =   1;                      //enable Timer 0 interrupt
    EA      =   1;
    while (1);
}
```

2. Assembler Listing

```
/*---------------------------------------------------------------------------------------------------*/
/* --- STC MCU  Limited. ---------------------------------------------------------------------------*/
/* --- Exam Program using 16-bit auto-reload timer/counter to simulate 10 or 16 bits PWM -*/
/* --- Mobile: (86)13922805190 ---------------------------------------------------------------------*/
/* --- Fax: 86-755-82905966 ------------------------------------------------------------------------*/
/* --- Tel: 86-755-82948412 ------------------------------------------------------------------------*/
/* --- Web: www.STCMCU.com -------------------------------------------------------------------------*/
/* If you want to use the program or the program referenced in the  ----------------------------*/
/* article, please specify in which data and procedures from STC    ----------------------------*/
/*---- In Keil C development environment, select the Intel 8052 to compiling ----------------*/
/*----  And only contain < reg51.h > as header file ------------------------------------------------*/
/*---------------------------------------------------------------------------------------------------*/

//suppose the frequency of test chip is 18.432MHz

;PWM6BIT        EQU     64                      ;6-bit PWM periodicity
PWM8BIT         EQU     256                     ;8-bit PWM periodicity
;PWM10BIT       EQU     1024                    ;10-bit PWM periodicity
;PWM16BIT       EQU     65536                   ;16-bit PWM periodicity

HIGHDUTY        EQU     64                      ;high duty (duty ratio 64/256=25%)
LOWDUTY         EQU     (PWM8BIT-HIGHDUTY)      ;low duty

AUXR            DATA    08EH                    ;Auxiliary register
INT_CLKO        DATA    08FH                    ;Clock Output register
T0CLKO          BIT     P3.5                    ;T0 Clock Output

FLAG            BIT     20H.0

;-----------------------------------------------
```

STC MCU Limited.

```
        ORG     0000H
        LJMP    MAIN

        ORG     000BH
        LJMP    TM0_ISR

;-----------------------------------------------

MAIN:
        MOV     AUXR,   #80H                    ;T0 in 1T mode
        MOV     INT_CLKO,       #01H            ;enable the function of Timer 0 clock output
        ANL     TMOD,   #0F0H                   ;T0 in mode 0(16-bit auto-reload timer/counter)
        MOV     TL0,    #LOW (65536-LOWDUTY)                    ;initialize the reload value
        MOV     TH0,    #HIGH (65536-LOWDUTY)
        SETB    T0CLKO                          ;initialize the pin of clock output (soft PWM port)
        CLR     FLAG
        SETB    TR0                             ;run Timer 0
        SETB    ET0                             ;enable Timer 0 interrupt
        SETB    EA

        SJMP    $

;-----------------------------------------------
;Timer 0 interrupt service routine
TM0_ISR:
        CPL     FLAG
        JNB     FLAG,   READYLOW
READYHIGH:
        MOV     TL0,    #LOW (65536-HIGHDUTY)
        MOV     TH0,    #HIGH (65536-HIGHDUTY)
        JMP     TM0ISR_EXIT
READYLOW:
        MOV     TL0,    #LOW (65536-LOWDUTY)
        MOV     TH0,    #HIGH (65536-LOWDUTY)
TM0ISR_EXIT:
        RETI

;-----------------------------------------------

        END
```

STC MCU Limited.

11.11 Circuit Diagram using CCP/PCA to achieve 8~16 bit DAC

CCP is abbreviation for Capture, Compare, PWM

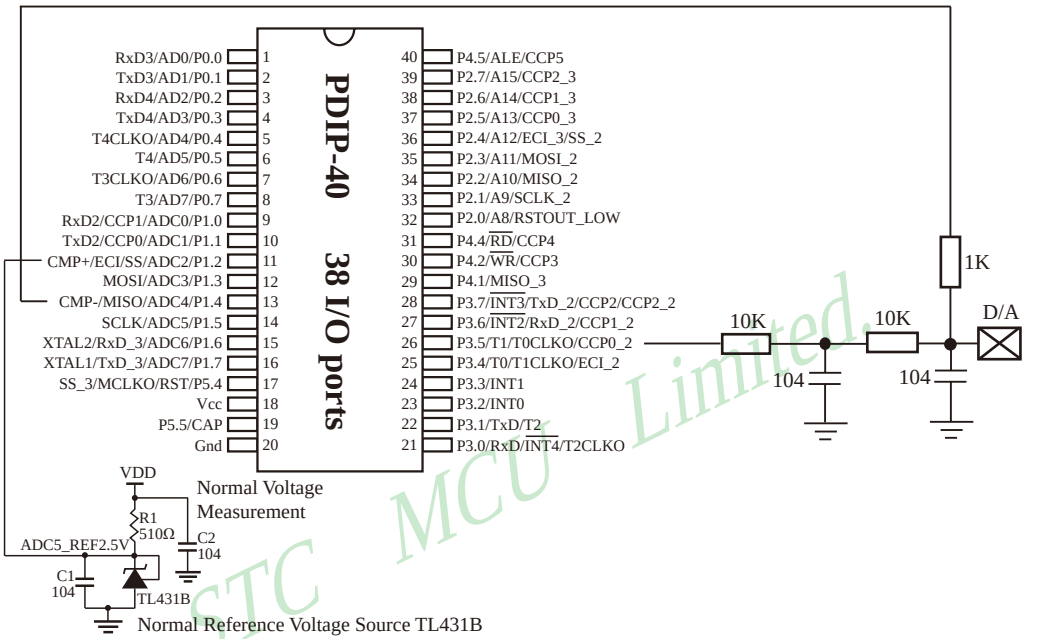

Note:

（1）the higher the PWM frequency is, the smoother the output wave is.

（2）Suppose the operating voltage is 5V and 1V need to be output, if high level is set to 1/5 and low level to 4/5, PWM output voltage would be 1V.

Normal Reference Voltage Source TL431B

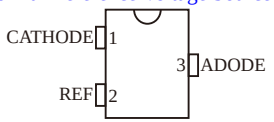

Package: SOT23-3; Price: RMB￥0.15~0.3

The symbol of normal reference voltage source TL431B

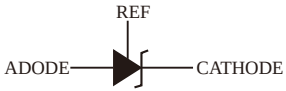

STC MCU Limited.

Chapter 12 New 6 Channels of PWM of STC15W4K series ——High-Precision PWM with Death Time Control

There are a group of Pulse Width Modulation generators (six channels independently) intergated in STC-15W4K32S4 series MCU, each of one owns two counter T1 and T2 to control the level to change. Besides, a 15-bits counter also is availabe for all PWM generators.

The six channels of PWM also can monitor the external exception cases such as unusal level of P2.4 port or abnormal comparing result of comparator so as to emergency shutdown the PWM output.

The output ports related with the new six channels of PWM of STC15W4K32S4 series MCU are defined as below：

[PWM2:P3.7, PWM3:P2.1, PWM4:P2.2, PWM5:P2.3, PWM6:P1.6, PWM7:P1.7]

Each of PWM output ports can be switched to the second group of pins by setting the SFRs bit CnPINSEL:

[PWM2_2:P2.7, PWM3_2:P4.5, PWM4_2:P4.4, PWM5_2:P4.2, PWM6_2:P0.7, PWM7_2:P0.6]

SFRs about port modes

Symbol	Description	Address	Bit Address and Symbol								Value after Power-on or Reset
			B7	B6	B5	B4	B3	B2	B1	B0	
P1M1	P1 configuration 1	91H									0000,0000
P1M0	P1 configuration 0	92H									0000,0000
P0M1	P0 configuration 1	93H									0000,0000
P0M0	P0 configuration 0	94H									0000,0000
P2M1	P2 configuration 1	95H									0000,0000
P2M0	P2 configuration 0	96H									0000,0000
P3M1	P3 configuration 1	B1H									0000,0000
P3M0	P3 configuration 0	B2H									0000,0000
P4M1	P4 configuration 1	B3H									0000,0000
P4M0	P4 configuration 0	B4H									0000,0000

Configrue the modes of I/O ports

PxM1	PxM0	I/O ports Mode
0	0	quasi_bidirectional (traditional 8051 I/O port output）
0	1	push-pull output(strong pull-up output)
1	0	input-only (high-impedance)
1	1	Open Drain

STC MCU Limited.

The output ports related with the new six channels of PWM must be set as quasi_bidirectional or push-pull output(strong pull-up output) mode. Only then can the PWM output ports be used correctly.

For example, set all ports as quasi_bidirectional mode in assembly code as bellow:

```
MOV     P0M0,   #00H
MOV     P0M1,   #00H
MOV     P1M0,   #00H
MOV     P1M1,   #00H
MOV     P2M0,   #00H
MOV     P2M1,   #00H
MOV     P3M0,   #00H
MOV     P3M1,   #00H
MOV     P4M0,   #00H
MOV     P4M1,   #00H
```

STC MCU Limited.

12.1 Special Function Registers of New PWM Generators

Symbol	Description	Add.	Bit Address and Symbol								Value after Power-on or Reset
			B7	B6	B5	B4	B3	B2	B1	B0	
P_SW2	Peripheral Function Switch register 2	BAH	EAXSFR	DBLPWR	P31PU	P30PU	-	S4_S	S3_S	S2_S	0000,0000
PWMCFG	PWM Configure register	F1H	-	CBTADC	C7INI	C6INI	C5INI	C4INI	C3INI	C2INI	0000,0000
PWMCR	PWM Control register	F5H	ENPWM	ECBI	ENC7O	ENC6O	ENC5O	ENC4O	ENC3O	ENC2O	0000,0000
PWMIF	PWM Interrupt Flag register	F6H	-	CBIF	C7IF	C6IF	C5IF	C4IF	C3IF	C2IF	x000,0000
PWMFDCR	PWM F_ception Dectection Control Register	F7H	-	-	ENFD	FLTFLIO	EFDI	FDCMP	FDIO	FDIF	xx00,0000
PWMCH	PWM Counter High	FFF0H	-	PWMCH[14:8]							x000,0000
PWMCL	PWM Counter low	FFF1H	PWMCL[7:0]								0000,0000
PWMCKS	PWM Clock Selection register	FFF2H	-	-	-	SELT2	PS[3:0]				xxx0,0000
PWM2T1H	Timer 1 of PWM2 High	FF00H	-	PWM2T1H[14:8]							x000,0000
PWM2T1L	Timer 1 of PWM2 Low	FF01H	PWM2T1L[7:0]								0000,0000
PWM2T2H	Timer 2 of PWM2 High	FF02H	-	PWM2T2H[14:8]							x000,0000
PWM2T2L	Timer 2 of PWM2 Low	FF03H	PWM2T2L[7:0]								0000,0000
PWM2CR	PWM2 Control register	FF04H	-	-	-	-	PWM2_PS	EPWM2I	EC2T2SI	EC2T1SI	xxxx,0000
PWM3T1H	Timer 1 of PWM3 High	FF10H	-	PWM3T1H[14:8]							x000,0000
PWM3T1L	Timer 1 of PWM3 Low	FF11H	PWM3T1L[7:0]								0000,0000

Symbol	Description	Add.	Bit Address and Symbol								Value after Power-on or Reset
			B7	B6	B5	B4	B3	B2	B1	B0	
PWM3T2H	Timer 2 of PWM3 High	FF12H	-	PWM3T2H[14:8]							x000,0000
PWM3T2L	Timer 2 of PWM3 Low	FF13H	PWM3T2L[7:0]								0000,0000
PWM3CR	PWM3 Control register	FF14H	-	-	-	-	PWM3_PS	EPWM3I	EC3T2SI	EC3T1SI	xxxx,0000
PWM4T1H	Timer 1 of PWM4 High	FF20H	-	PWM4T1H[14:8]							x000,0000
PWM4T1L	Timer 1 of PWM4 Low	FF21H	PWM4T1L[7:0]								0000,0000
PWM4T2H	Timer 2 of PWM4 High	FF22H	-	PWM4T2H[14:8]							x000,0000
PWM4T2L	Timer 2 of PWM4 Low	FF23H	PWM4T2L[7:0]								0000,0000
PWM4CR	PWM4 Control register	FF24H	-	-	-	-	PWM4_PS	EPWM4I	EC4T2SI	EC4T1SI	xxxx,0000
PWM5T1H	Timer 1 of PWM5 High	FF30H	-	PWM5T1H[14:8]							x000,0000
PWM5T1L	Timer 1 of PWM5 Low	FF31H	PWM5T1L[7:0]								0000,0000
PWM5T2H	Timer 2 of PWM5 High	FF32H	-	PWM5T2H[14:8]							x000,0000
PWM5T2L	Timer 2 of PWM5 Low	FF33H	PWM5T2L[7:0]								0000,0000
PWM5CR	PWM5 Control register	FF34H	-	-	-	-	PWM5_PS	EPWM5I	EC5T2SI	EC5T1SI	xxxx,0000
PWM6T1H	Timer 1 of PWM6 High	FF40H	-	PWM6T1H[14:8]							x000,0000
PWM6T1L	Timer 1 of PWM6 Low	FF41H	PWM6T1L[7:0]								0000,0000
PWM6T2H	Timer 2 of PWM6 High	FF42H	-	PWM6T2H[14:8]							x000,0000
PWM6T2L	Timer 2 of PWM6 Low	FF43H	PWM6T2L[7:0]								0000,0000
PWM6CR	PWM6 Control register	FF44H	-	-	-	-	PWM6_PS	EPWM6I	EC6T2SI	EC6T1SI	xxxx,0000
PWM7T1H	Timer 1 of PWM7 High	FF50H	-	PWM7T1H[14:8]							x000,0000
PWM7T1L	Timer 1 of PWM7 Low	FF51H	PWM7T1L[7:0]								0000,0000
PWM7T2H	Timer 2 of PWM7 High	FF52H	-	PWM7T2H[14:8]							x000,0000
PWM7T2L	Timer 2 of PWM7 Low	FF53H	PWM7T2L[7:0]								0000,0000
PWM7CR	PWM7 Control register	FF54H	-	-	-	-	PWM7_PS	EPWM7I	EC7T2SI	EC7T1SI	xxxx,0000

STC MCU Limited.

1. Peripheral Function Switch register 2 P_SW2

SFR name	Address	bit	B7	B6	B5	B4	B3	B2	B1	B0	Reset Value
P_SW2	BAH	name	EAXSFR	DBLPWR	P31PU	P30PU	-	S4_S	S3_S	S2_S	0000,0000B

EAXSFR：Enable the Extended SFRs

0：MOVX A,@DPTR/MOVX @DPTR,A will access the extended RAM（XRAM）

1：MOVX A,@DPTR/MOVX @DPTR,A will access the extended SFR（XSFR）

Attention：if needed to use the SFRs in the extended RAM, this bit EAXSFR must be enabled.

2. PWM Configure registe PWMCFG

SFR name	Address	bit	B7	B6	B5	B4	B3	B2	B1	B0	Reset Value
PWMCFG	F1H	name	-	CBTADC	C7INI	C6INI	C5INI	C4INI	C3INI	C2INI	0000,0000

CBTADC：if trigger A/D Convert when the counter of PWM return to zero（CBIF==1）or not

0：do not trigger A/D Convert when the counter of PWM return to zero

1：trigger A/D Convert when the counter of PWM return to zero（CBIF==1）（It would be happen only has ENPWM==1 and ADCON==1 been set before）

C7INI：Set the initial level of PWM7 output ports

0：the initial level of PWM7 output ports is low level

1：the initial level of PWM7 output ports is high level

C6INI：Set the initial level of PWM6 output ports

0：the initial level of PWM6 output ports is low level

1：the initial level of PWM6 output ports is high level

C5INI：Set the initial level of PWM5 output ports

0：the initial level of PWM5 output ports is low level

1：the initial level of PWM5 output ports is high level

C4INI：Set the initial level of PWM4 output ports

0：the initial level of PWM4 output ports is low level

1：the initial level of PWM4 output ports is high level

C3INI：Set the initial level of PWM3 output ports

0：the initial level of PWM3 output ports is low level

1：the initial level of PWM3 output ports is high level

C2INI：Set the initial level of PWM2 output ports

0：the initial level of PWM2 output ports is low level

1：the initial level of PWM2 output ports is high level

STC MCU Limited

3. PWM Control register PWMCR

SFR name	Address	bit	B7	B6	B5	B4	B3	B2	B1	B0	Reset Value
PWMCR	F5H	name	ENPWM	ECBI	ENC70	ENC60	ENC50	ENC40	ENC30	ENC20	0000,0000B

ENPWM： if enable the new enhanced PWM generators or not
0：dsable the new enhanced PWM generators
1：enable the new enhanced PWM generators

ECBI： if enable the PWM interrupt as the PWM counter return to zero or not
0：disable the PWM interrupt as the PWM counter return to zero
1：enable the PWM interrupt as the PWM counter return to zero

ENC7O： set the ports of PWM7
0：the ports of PWM7 are just as GPIO
1：the ports of PWM7 are the output ports of PWM7 which would be controlled by PWM generator

ENC6O： set the ports of PWM6
0：the ports of PWM6 are just as GPIO
1：the ports of PWM6 are the output ports of PWM6 which would be controlled by PWM generator

ENC5O： set the ports of PWM5
0：the ports of PWM5 are just as GPIO
1：the ports of PWM5 are the output ports of PWM5 which would be controlled by PWM generator

ENC4O： set the ports of PWM4
0：the ports of PWM4 are just as GPIO
1：the ports of PWM4 are the output ports of PWM4 which would be controlled by PWM generator

ENC3O： set the ports of PWM3
0：the ports of PWM3 are just as GPIO
1：the ports of PWM3 are the output ports of PWM3 which would be controlled by PWM generator

ENC2O： set the ports of PWM2
0：the ports of PWM2 are just as GPIO
1：the ports of PWM2 are the output ports of PWM2 which would be controlled by PWM generator

4. PWM Interrupt Flag register PWMIF

SFR name	Address	bit	B7	B6	B5	B4	B3	B2	B1	B0	Reset Value
PWMIF	F6H	name	-	CBIF	C7IF	C6IF	C5IF	C4IF	C3IF	C2IF	x000,0000B

CBIF： The flag bit of PWM interrupt happened as the PWM counter return to zero
The bit will be set to 1 by hardware as the PWM counter return to zero.If **ECBI==1**，the corresponding interrupt routine would be run. This bit may be cleared by software.

C7IF： The flag bit of PWM7 interrupt
This bit will be set to 1 by hardware as the PWM has turned. If **EPWM7I==1**，the corresponding interrupt routine would be run. This bit may be cleared by software.

STC MCU Limited.

C6IF： The flag bit of PWM6 interrupt

This bit will be set to 1 by hardware as the PWM has turned.If **EPWM6I==1**，the corresponding interrupt routine would be run. This bit may be cleared by software.

C5IF： The flag bit of PWM5 interrupt

This bit will be set to 1 by hardware as the PWM has turned.If **EPWM5I==1**，the corresponding interrupt routine would be run. This bit may be cleared by software.

C4IF： The flag bit of PWM4 interrupt

This bit will be set to 1 by hardware as the PWM has turned. If **EPWM4I==1**，the corresponding interrupt routine would be run. This bit may be cleared by software.

C3IF： The flag bit of PWM3 interrupt

This bit will be set to 1 by hardware as the PWM has turned.If **EPWM3I==1**，the corresponding interrupt routine would be run. This bit may be cleared by software.

C2IF： The flag bit of PWM2 interrupt

This bit will be set to 1 by hardware as the PWM has turned.If **EPWM2I==1**，the corresponding interrupt routine would be run. This bit may be cleared by software.

5. PWM F_ception Dectection Control Register PWMFDCR

SFR name	Address	bit	B7	B6	B5	B4	B3	B2	B1	B0	Reset Value
PWMFDCR	F7H	name	-	-	ENFD	FLTFLIO	EFDI	FDCMP	FDIO	FDIF	xx00,0000B

ENFD： if enable the functon of PWM f_ception detection or not

0：disable the functon of PWM f_ception detection

1：enable the functon of PWM f_ception detection

FLTFLIO：set the mode of PWM output ports as the external exception cases hanppened

0：the mode of PWM output ports will stay the same as the external exception cases hanppened

1：the mode of PWM output ports will be set as input-only (high-impedance mode as the external exception cases hanppened

EFDI： if enable the PWM f_ception detection interrupt or not

0：disable the PWM f_ception detection interrupt

1：enable the PWM f_ception detection interrupt

FDCMP： Set the comparator output as the external exception source

0：the comparator is irrelevant to PWM

1：the external exception case will happen as the level of P5.5/CMP+ **is higher the one of P5.4/CMP- or** internal bandGap voltage 1.28V

FDIO： Set the level of P2.4 output as the external exception source

0：P2.4 is irrelevant to PWM

1：the external exception case will happen as the level of P2.4 is high

FDIF： The flag bit of the PWM f_ception detection interrupt

This bit will be set to 1 by hardware as the PWM external exception case has happened. If EFDI==1，the corresponding interrupt routine would be run. This bit may be cleared by software.

STC MCU Limited.

6. PWM2 Control register PWM2CR

SFR name	Address	bit	B7	B6	B5	B4	B3	B2	B1	B0	Reset Value
PWM2CR	FF04H (XSFR)	name	-	-	-	-	PWM2_PS	EPWM2I	EC2T2SI	EC2T1SI	xxxx,0000B

PWM2_PS：select the output ports of PWM2 on where
0：the output ports of PWM2 on P3.7
1：the output ports of PWM2 onP2.7

EPWM2I：if enable the PWM2 interrupt or not
0：disable the PWM2 interrupt
1：enable the PWM2 interrupt. If **C2IF==1**，the corresponding interrupt routine would be run.

EC2T2SI：make the PWM2 interrupt to occur when the T2 of PWM2 has turned
0：make the PWM2 interrupt to do nothing with the T2 of PWM2
1：make the PWM2 interrupt to occur when the T2 of PWM2 has turned. And the T2 of PWM2 would turn and the bit C2IF would be set as 1 as the internal counting value of PWM2 equals the preset value of T2. And then if **EPWM2I==1**，the corresponding interrupt routine would be run.

EC2T1SI：make the PWM2 interrupt to occur when the T1 of PWM2 has turned
0：make the PWM2 interrupt to do nothing with the T1 of PWM2
1：make the PWM2 interrupt to occur when the T1 of PWM2 has turned. And the T1 of PWM2 would turn and the bit C2IF would be set as 1 as the internal counting value of PWM2 equals the preset value of T1. And then if **EPWM2I==1**，the corresponding interrupt routine would be run.

7. PWM3 Control register PWM3CR

SFR name	Address	bit	B7	B6	B5	B4	B3	B2	B1	B0	Reset Value
PWM3CR	FF14H (XSFR)	name	-	-	-	-	PWM3_PS	EPWM3I	EC3T2SI	EC3T1SI	xxxx,0000B

PWM3_PS：select the output ports of PWM3 on where
0：the output ports of PWM3 on P2.1
1：the output ports of PWM3 on P4.5

EPWM3I：if enable the PWM3 interrupt or not
0：disable the PWM3 interrupt
1：enable the PWM3 interrupt. If **C3IF==1**，the corresponding interrupt routine would be run.

EC3T2SI：make the PWM3 interrupt to occur when the T2 of PWM3 has turned
0：make the PWM3 interrupt to do nothing with the T2 of PWM3
1：make the PWM3 interrupt to occur when the T2 of PWM3 has turned. And the T2 of PWM3 would turn and the bit C3IF would be set as 1 as the internal counting value of PWM3 equals the preset value of T2. And then if **EPWM3I==1**，the corresponding interrupt routine would be run.

EC3T1SI：make the PWM3 interrupt to occur when the T1 of PWM3 has turned
0：make the PWM3 interrupt to do nothing with the T1 of PWM3
1：make the PWM3 interrupt to occur when the T1 of PWM3 has turned. And the T1 of PWM3 would turn and the bit C3IF would be set as 1 as the internal counting value of PWM3 equals the preset value of T1. And then if **EPWM3I==1**，the corresponding interrupt routine would be run.

STC MCU Limited.

8. PWM4 Control register PWM4CR

SFR name	Address	bit	B7	B6	B5	B4	B3	B2	B1	B0	Reset Value
PWM4CR	FF24H (XSFR)	name	-	-	-	-	PWM4_PS	EPWM4I	EC4T2SI	EC4T1SI	xxxx,0000B

PWM4_PS：select the output ports of PWM4 on where
0：the output ports of PWM4 on P2.2
1：the output ports of PWM4 on P4.4

EPWM4I：if enable the PWM4 interrupt or not
0：disable the PWM4 interrupt
1：enable the PWM4 interrupt. If **C4IF==1**，the corresponding interrupt routine would be run.

EC4T2SI：make the PWM4 interrupt to occur when the T2 of PWM4 has turned
0：make the PWM4 interrupt to do nothing with the T2 of PWM4
1：make the PWM4 interrupt to occur when the T2 of PWM4 has turned. And the T2 of PWM4 would turn and the bit C4IF would be set as 1 as the internal counting value of PWM4 equals the preset value of T2. And then if **EPWM4I==1**，the corresponding interrupt routine would be run.

EC4T1SI：make the PWM4 interrupt to occur when the T1 of PWM4 has turned
0：make the PWM4 interrupt to do nothing with the T1 of PWM4
1：make the PWM4 interrupt to occur when the T1 of PWM4 has turned. And the T1 of PWM4 would turn and the bit C4IF would be set as 1 as the internal counting value of PWM4 equals the preset value of T1. And then if **EPWM4I==1**，the corresponding interrupt routine would be run.

9. PWM5 Control register PWM5CR

SFR name	Address	bit	B7	B6	B5	B4	B3	B2	B1	B0	Reset Value
PWM5CR	FF34H (XSFR)	name	-	-	-	-	PWM5_PS	EPWM5I	EC5T2SI	EC5T1SI	xxxx,0000B

PWM5_PS：select the output ports of PWM5 on where
0：the output ports of PWM5 on P2.3
1：the output ports of PWM5 on P4.2

EPWM5I：if enable the PWM5 interrupt or not
0：disable the PWM5 interrupt
1：enable the PWM5 interrupt. If **C5IF==1**，the corresponding interrupt routine would be run.

EC5T2SI：make the PWM5 interrupt to occur when the T2 of PWM5 has turned
0：make the PWM5 interrupt to do nothing with the T2 of PWM5
1：make the PWM5 interrupt to occur when the T2 of PWM5 has turned. And the T2 of PWM5 would turn and the bit C5IF would be set as 1 as the internal counting value of PWM5 equals the preset value of T2. And then if **EPWM5I==1**，the corresponding interrupt routine would be run.

EC5T1SI：make the PWM5 interrupt to occur when the T1 of PWM5 has turned
0：make the PWM5 interrupt to do nothing with the T1 of PWM5
1：make the PWM5 interrupt to occur when the T1 of PWM5 has turned. And the T1 of PWM5 would turn and the bit C5IF would be set as 1 as the internal counting value of PWM5 equals the preset value of T1. And then if **EPWM5I==1**，the corresponding interrupt routine would be run.

STC MCU Limited

10. PWM6 Control register PWM6CR

SFR name	Address	bit	B7	B6	B5	B4	B3	B2	B1	B0	Reset Value
PWM6CR	FF44H (XSFR)	name	-	-	-	-	PWM6_PS	EPWM6I	EC6T2SI	EC6T1SI	xxxx,0000B

PWM6_PS：select the output ports of PWM6 on where
0：the output ports of PWM6 on P1.6
1：the output ports of PWM6 on P0.7

EPWM6I：if enable the PWM6 interrupt or not
0：disable the PWM6 interrupt
1：enable the PWM6 interrupt. If C6IF==1，the corresponding interrupt routine would be run.

EC6T2SI：make the PWM6 interrupt to occur when the T2 of PWM6 has turned
0：make the PWM6 interrupt to do nothing with the T2 of PWM6
1：make the PWM6 interrupt to occur when the T2 of PWM6 has turned. And the T2 of PWM6 would turn and the bit C6IF would be set as 1 as the internal counting value of PWM6 equals the preset value of T2. And then if EPWM6I==1，the corresponding interrupt routine would be run.

EC6T1SI：make the PWM6 interrupt to occur when the T1 of PWM6 has turned
0：make the PWM6 interrupt to do nothing with the T1 of PWM6
1：make the PWM6 interrupt to occur when the T1 of PWM6 has turned. And the T1 of PWM6 would turn and the bit C6IF would be set as 1 as the internal counting value of PWM6 equals the preset value of T1. And then if EPWM6I==1，the corresponding interrupt routine would be run.

11. PWM7 Control register PWM7CR

SFR name	Address	bit	B7	B6	B5	B4	B3	B2	B1	B0	Reset Value
PWM7CR	FF54H (XSFR)	name	-	-	-	-	PWM7_PS	EPWM7I	EC7T2SI	EC7T1SI	xxxx,0000B

PWM7_PS：select the output ports of PWM7 on where
0：the output ports of PWM7 on P1.7
1：the output ports of PWM7 on P0.6

EPWM7I：if enable the PWM7 interrupt or not
0：disable the PWM7 interrupt
1：enable the PWM7 interrupt. If C7IF==1，the corresponding interrupt routine would be run.

EC7T2SI：make the PWM7 interrupt to occur when the T2 of PWM7 has turned
0：make the PWM7 interrupt to do nothing with the T2 of PWM7
1：make the PWM7 interrupt to occur when the T2 of PWM7 has turned. And the T2 of PWM7 would turn and the bit C7IF would be set as 1 as the internal counting value of PWM7 equals the preset value of T2. And then if EPWM7I==1，the corresponding interrupt routine would be run.

EC7T1SI：make the PWM7 interrupt to occur when the T1 of PWM7 has turned
0：make the PWM7 interrupt to do nothing with the T1 of PWM7
1：make the PWM7 interrupt to occur when the T1 of PWM7 has turned. And the T1 of PWM7 would turn and the bit C7IF would be set as 1 as the internal counting value of PWM7 equals the preset value of T1. And then if EPWM7I==1，the corresponding interrupt routine would be run.

STC MCU Limited.

12.2 Interrupts of New Enhanced PWM Generators

SFRs related with the interrupts of new enhanced PWM

Symbol	Description	Add.	Bit Address and Symbol								Value after Power-on or Reset
			B7	B6	B5	B4	B3	B2	B1	B0	
IP2	2rd Interrupt Priority register	B5H	-	-	-	PX4	PPWMFD	PPWM	PSPI	PS2	xxx0,0000
PWMCR	PWM Control register	F5H	ENPWM	ECBI	ENC7O	ENC6O	ENC5O	ENC4O	ENC3O	ENC2O	0000,0000
PWMIF	PWM Interrupt Flag register	F6H	-	CBIF	C7IF	C6IF	C5IF	C4IF	C3IF	C2IF	x000,0000
PWMFDCR	PWM F_ception Dectection Control Register	F7H	-	-	ENFD	FLTFLIO	EFDI	FDCMP	FDIO	FDIF	xx00,0000
PWM2CR	PWM2 Control register	FF04H	-	-	-	-	PWM2_PS	EPWM2I	EC2T2SI	EC2T1SI	xxxx,0000
PWM3CR	PWM3 Control register	FF14H	-	-	-	-	PWM3_PS	EPWM3I	EC3T2SI	EC3T1SI	xxxx,0000
PWM4CR	PWM4 Control register	FF24H	-	-	-	-	PWM4_PS	EPWM4I	EC4T2SI	EC4T1SI	xxxx,0000
PWM5CR	PWM5 Control register	FF34H	-	-	-	-	PWM5_PS	EPWM5I	EC5T2SI	EC5T1SI	xxxx,0000
PWM6CR	PWM6 Control register	FF44H	-	-	-	-	PWM6_PS	EPWM6I	EC6T2SI	EC6T1SI	xxxx,0000
PWM7CR	PWM7 Control register	FF54H	-	-	-	-	PWM7_PS	EPWM7I	EC7T2SI	EC7T1SI	xxxx,0000

STC MCU Limited.

1. PWM Interrupt Priority register IP2

SFR name	Address	bit	B7	B6	B5	B4	B3	B2	B1	B0	Reset Value
IP2	B5H	name	-	-	-	PX4	PPWMFD	PPWM	PSPI	PS2	0000,0000B

PPWMFD: PWM f_ception detection interrupt priority control bit.
if PPWMFD=0, PWM f_ception detection interrupt is assigned lowest priority (priority 0).
if PPWMFD=1, PWM f_ception detection interrupt is assigned highest priority (priority 1).

PPWM: PWM interrupt priority control bit.
if PPWM=0, PWM interrupt is assigned lowest priority (priority 0).
if PPWM=1, PWM interrupt is assigned highest priority (priority 1).

2. PWM Control register PWMCR

SFR name	Address	bit	B7	B6	B5	B4	B3	B2	B1	B0	Reset Value
PWMCR	F5H	name	ENPWM	ECBI	ENC70	ENC60	ENC50	ENC40	ENC30	ENC20	0000,0000B

ECBI ： if enable the PWM interrupt as the PWM counter return to zero or not
0： disable the PWM interrupt as the PWM counter return to zero
1： enable the PWM interrupt as the PWM counter return to zero

3. PWM Interrupt Flag register PWMIF

SFR name	Address	bit	B7	B6	B5	B4	B3	B2	B1	B0	Reset Value
PWMIF	F6H	name	-	CBIF	C7IF	C6IF	C5IF	C4IF	C3IF	C2IF	x000,0000B

CBIF： The flag bit of PWM interrupt happened as the PWM counter return to zero
The bit will be set to 1 by hardware as the PWM counter return to zero.If **ECBI==1**，the corresponding interrupt routine would be run. This bit may be cleared by software.

C7IF： The flag bit of PWM7 interrupt
This bit will be set to 1 by hardware as the PWM has turned. If **EPWM7I==1**，the corresponding interrupt routine would be run. This bit may be cleared by software.

C6IF： The flag bit of PWM6 interrupt
This bit will be set to 1 by hardware as the PWM has turned.If **EPWM6I==1**，the corresponding interrupt routine would be run. This bit may be cleared by software.

C5IF： The flag bit of PWM5 interrupt
This bit will be set to 1 by hardware as the PWM has turned.If **EPWM5I==1**，the corresponding interrupt routine would be run. This bit may be cleared by software.

C4IF： The flag bit of PWM4 interrupt
This bit will be set to 1 by hardware as the PWM has turned. If **EPWM4I==1**，the corresponding interrupt routine would be run. This bit may be cleared by software.

C3IF： The flag bit of PWM3 interrupt
This bit will be set to 1 by hardware as the PWM has turned.If **EPWM3I==1**，the corresponding interrupt routine would be run. This bit may be cleared by software.

C2IF： The flag bit of PWM2 interrupt
This bit will be set to 1 by hardware as the PWM has turned.If **EPWM2I==1**，the corresponding interrupt routine would be run. This bit may be cleared by software.

STC MCU Limited.

4. PWM F_ception Dectection Control Register PWMFDCR

SFR name	Address	bit	B7	B6	B5	B4	B3	B2	B1	B0	Reset Value
PWMFDCR	F7H	name	-	-	ENFD	FLTFLIO	EFDI	FDCMP	FDIO	FDIF	xx00,0000B

EFDI： if enable the PWM f_ception detection interrupt or not
0：disable the PWM f_ception detection interrupt
1：enable the PWM f_ception detection interrupt

FDIF： The flag bit of the PWM f_ception detection interrupt
This bit will be set to 1 by hardware as the PWM external exception case has happened. If EFDI==1，the corresponding interrupt routine would be run. This bit may be cleared by software.

5. PWM2 Control register PWM2CR

SFR name	Address	bit	B7	B6	B5	B4	B3	B2	B1	B0	Reset Value
PWM2CR	FF04H (XSFR)	name	-	-	-	-	PWM2_PS	EPWM2I	EC2T2SI	EC2T1SI	xxxx,0000B

EPWM2I： if enable the PWM2 interrupt or not
0：disable the PWM2 interrupt
1：enable the PWM2 interrupt. If **C2IF==1**，the corresponding interrupt routine would be run.

EC2T2SI： make the PWM2 interrupt to occur when the T2 of PWM2 has turned
0：make the PWM2 interrupt to do nothing with the T2 of PWM2
1：make the PWM2 interrupt to occur when the T2 of PWM2 has turned. And the T2 of PWM2 would turn and the bit C2IF would be set as 1 as the internal counting value of PWM2 equals the preset value of T2. And then if **EPWM2I==1**，the corresponding interrupt routine would be run.

EC2T1SI： make the PWM2 interrupt to occur when the T1 of PWM2 has turned
0：make the PWM2 interrupt to do nothing with the T1 of PWM2
1：make the PWM2 interrupt to occur when the T1 of PWM2 has turned. And the T1 of PWM2 would turn and the bit C2IF would be set as 1 as the internal counting value of PWM2 equals the preset value of T1. And then if **EPWM2I==1**，the corresponding interrupt routine would be run.

STC MCU Limited.

6. PWM3 Control register PWM3CR

SFR name	Address	bit	B7	B6	B5	B4	B3	B2	B1	B0	Reset Value
PWM3CR	FF14H (XSFR)	name	-	-	-	-	PWM3_PS	EPWM3I	EC3T2SI	EC3T1SI	xxxx,0000B

EPWM3I： if enable the PWM3 interrupt or not
0：disable the PWM3 interrupt
1：enable the PWM3 interrupt. If **C3IF==1**，the corresponding interrupt routine would be run.

EC3T2SI： make the PWM3 interrupt to occur when the T2 of PWM3 has turned
0：make the PWM3 interrupt to do nothing with the T2 of PWM3
1：make the PWM3 interrupt to occur when the T2 of PWM3 has turned. And the T2 of PWM3 would turn and the bit C3IF would be set as 1 as the internal counting value of PWM3 equals the preset value of T2. And then if **EPWM3I==1**，the corresponding interrupt routine would be run.

EC3T1SI： make the PWM3 interrupt to occur when the T1 of PWM3 has turned
0：make the PWM3 interrupt to do nothing with the T1 of PWM3
1：make the PWM3 interrupt to occur when the T1 of PWM3 has turned. And the T1 of PWM3 would turn and the bit C3IF would be set as 1 as the internal counting value of PWM3 equals the preset value of T1. And then if **EPWM3I==1**，the corresponding interrupt routine would be run.

7. PWM4 Control register PWM4CR

SFR name	Address	bit	B7	B6	B5	B4	B3	B2	B1	B0	Reset Value
PWM4CR	FF24H (XSFR)	name	-	-	-	-	PWM4_PS	EPWM4I	EC4T2SI	EC4T1SI	xxxx,0000B

EPWM4I： if enable the PWM4 interrupt or not

0：disable the PWM4 interrupt

1：enable the PWM4 interrupt. If **C4IF==1**，the corresponding interrupt routine would be run.

EC4T2SI： make the PWM4 interrupt to occur when the T2 of PWM4 has turned

0：make the PWM4 interrupt to do nothing with the T2 of PWM4

1：make the PWM4 interrupt to occur when the T2 of PWM4 has turned. And the T2 of PWM4 would turn and the bit C4IF would be set as 1 as the internal counting value of PWM4 equals the preset value of T2. And then if **EPWM4I==1**，the corresponding interrupt routine would be run.

EC4T1SI： make the PWM4 interrupt to occur when the T1 of PWM4 has turned

0：make the PWM4 interrupt to do nothing with the T1 of PWM4

1：make the PWM4 interrupt to occur when the T1 of PWM4 has turned. And the T1 of PWM4 would turn and the bit C4IF would be set as 1 as the internal counting value of PWM4 equals the preset value of T1. And then if **EPWM4I==1**，the corresponding interrupt routine would be run.

STC MCU Limited.

7. PWM5 Control register PWM5CR

SFR name	Address	bit	B7	B6	B5	B4	B3	B2	B1	B0	Reset Value
PWM5CR	FF34H (XSFR)	name	-	-	-	-	PWM5_PS	EPWM5I	EC5T2SI	EC5T1SI	xxxx,0000B

EPWM5I： if enable the PWM5 interrupt or not

0：disable the PWM5 interrupt

1：enable the PWM5 interrupt. If **C5IF==1**，the corresponding interrupt routine would be run.

EC5T2SI： make the PWM5 interrupt to occur when the T2 of PWM5 has turned

0：make the PWM5 interrupt to do nothing with the T2 of PWM5

1：make the PWM5 interrupt to occur when the T2 of PWM5 has turned. And the T2 of PWM5 would turn and the bit C5IF would be set as 1 as the internal counting value of PWM5 equals the preset value of T2. And then if **EPWM5I==1**，the corresponding interrupt routine would be run.

EC5T1SI： make the PWM5 interrupt to occur when the T1 of PWM5 has turned

0：make the PWM5 interrupt to do nothing with the T1 of PWM5

1：make the PWM5 interrupt to occur when the T1 of PWM5 has turned. And the T1 of PWM5 would turn and the bit C5IF would be set as 1 as the internal counting value of PWM5 equals the preset value of T1. And then if **EPWM5I==1**，the corresponding interrupt routine would be run.

9. PWM6 Control register PWM6CR

SFR name	Address	bit	B7	B6	B5	B4	B3	B2	B1	B0	Reset Value
PWM6CR	FF44H (XSFR)	name	-	-	-	-	PWM6_PS	EPWM6I	EC6T2SI	EC6T1SI	xxxx,0000B

EPWM6I： if enable the PWM6 interrupt or not

0：disable the PWM6 interrupt

1：enable the PWM6 interrupt. If C6IF==1，the corresponding interrupt routine would be run.

EC6T2SI： make the PWM6 interrupt to occur when the T2 of PWM6 has turned

0：make the PWM6 interrupt to do nothing with the T2 of PWM6

1：make the PWM6 interrupt to occur when the T2 of PWM6 has turned. And the T2 of PWM6 would turn and the bit C6IF would be set as 1 as the internal counting value of PWM6 equals the preset value of T2. And then if EPWM6I==1，the corresponding interrupt routine would be run.

EC6T1SI： make the PWM6 interrupt to occur when the T1 of PWM6 has turned

0：make the PWM6 interrupt to do nothing with the T1 of PWM6

1：make the PWM6 interrupt to occur when the T1 of PWM6 has turned. And the T1 of PWM6 would turn and the bit C6IF would be set as 1 as the internal counting value of PWM6 equals the preset value of T1. And then if EPWM6I==1，the corresponding interrupt routine would be run.

STC MCU Limited.

10. PWM7 Control register PWM7CR

SFR name	Address	bit	B7	B6	B5	B4	B3	B2	B1	B0	Reset Value
PWM7CR	FF54H (XSFR)	name	-	-	-	-	PWM7_PS	EPWM7I	EC7T2SI	EC7T1SI	xxxx,0000B

EPWM7I： if enable the PWM7 interrupt or not

0：disable the PWM7 interrupt

1：enable the PWM7 interrupt. If C7IF==1，the corresponding interrupt routine would be run.

EC7T2SI： make the PWM7 interrupt to occur when the T2 of PWM7 has turned

0：make the PWM7 interrupt to do nothing with the T2 of PWM7

1：make the PWM7 interrupt to occur when the T2 of PWM7 has turned. And the T2 of PWM7 would turn and the bit C7IF would be set as 1 as the internal counting value of PWM7 equals the preset value of T2. And then if EPWM7I==1，the corresponding interrupt routine would be run.

EC7T1SI： make the PWM7 interrupt to occur when the T1 of PWM7 has turned

0：make the PWM7 interrupt to do nothing with the T1 of PWM7

1：make the PWM7 interrupt to occur when the T1 of PWM7 has turned. And the T1 of PWM7 would turn and the bit C7IF would be set as 1 as the internal counting value of PWM7 equals the preset value of T1. And then if EPWM7I==1，the corresponding interrupt routine would be run.

Interrupt Sources and Vector address Table

Interrupt Sources	Interrupt Vector address	Interrupt Priority setting (IP2)	Interrupt Request	Interrupt Enable Control Bit	How to clear the interrupt request bit
PWM interrupt	00B3H (22)	PPWM	CBIF	ENPWM/ECBI/EA	Cleared by software
			C2IF	ENPWM / EPWM2I / EC2T2SI || EC2T1SI / EA	Cleared by software
			C3IF	ENPWM / EPWM3I / EC3T2SI || EC3T1SI / EA	Cleared by software
			C4IF	ENPWM / EPWM4I / EC4T2SI || EC4T1SI / EA	Cleared by software
			C5IF	ENPWM / EPWM5I / EC5T2SI || EC5T1SI / EA	Cleared by software
			C6IF	ENPWM / EPWM6I / EC6T2SI || EC6T1SI / EA	Cleared by software
			C7IF	ENPWM / EPWM7I / EC7T2SI || EC7T1SI / EA	Cleared by software
PWM f_ception detection interrupt	00BBH (23)	PPWMFD	FDIF	ENPWM / ENFD / EFDI / EA	Cleared by software

STC MCU Limited.

The declaration of PWM interrupt functions are shown below in C language program

```
void PWM_Routine(void)          interrupt 22;
void PWMFD_Routine(void) interrupt 23;
```

Structure of PWM generators

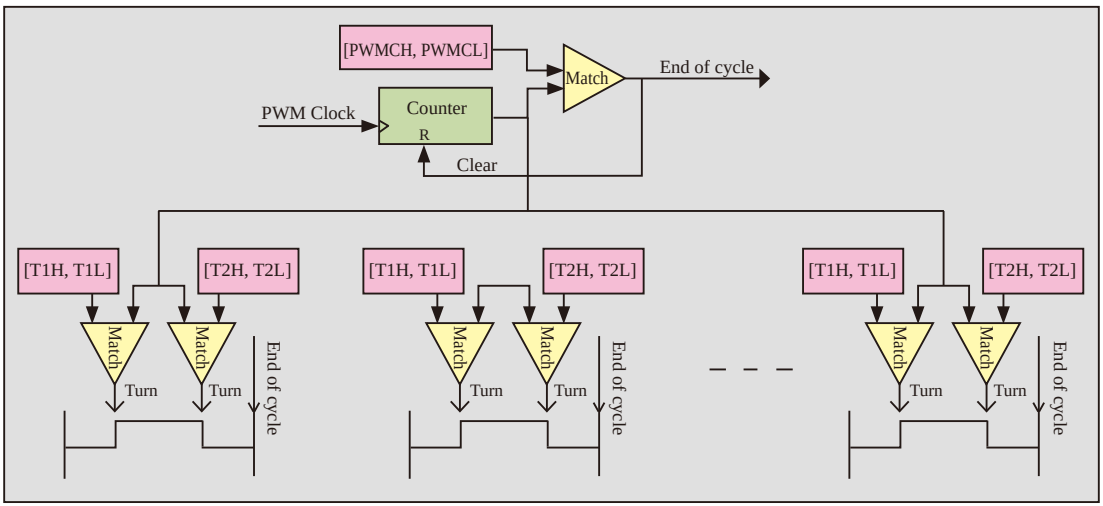

The following code is to generate a repetitive waveform shown in following figure :

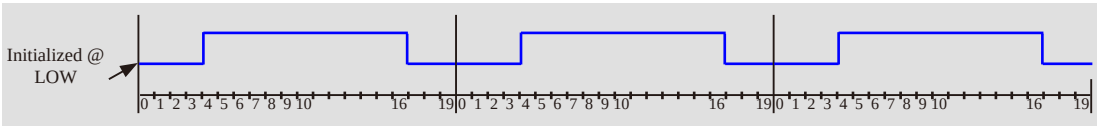

Period ==(16+1) Channel-4: toggle-point-1==3(0003H) toggle-point-2==16(0010H)

```
;; +------------------------------+
;; |  Global Configuration    |
;; +------------------------------+

 ; Set EAXSFR to enable xSFR writing against XRAM writing
            MOV     A,          P_SW2
            ORL     A,          #10000000B
            MOV     P_SW2,    A
            ;

 ; Set channel-4 output register start at LOW
            MOV     A,          PWMCFG
            ANL     A,          #11111011B              ; channel-4 start at LOW
            MOV     PWMCFG,           A
            ;

 ; Set a clock of the waveform generator consists of 4 Fosc
            MOV     DPTR,     #PWMCKS                   ; FFF2H
            MOV     A,          #00000011B
            MOVX    @DPTR, A
            ;

; Set period as 20
 ; {PWMCH,PWMCL} <= 19
            MOV     DPTR, #PWMCH                      ; FFF0H
            MOV     A,          #00H                  ; PWMCH should be changed first
            MOVX    @DPTR, A
            MOV     DPTR,     #PWMCL                  ; FFF1H
            MOV     A,          #13H                  ; Write PWMCL simultaneous update PWMCH
            MOVX    @DPTR, A
            ;
;; +--------------------------------+
;; |   Channel-4 Configuration  |
;; +--------------------------------+

 ; Set toggle point 1 of Channel-4 as 3
            MOV     DPTR,     #PWM4T1H                ; FF20H
```

STC MCU Limited.

```
        MOV     A,      #00H
        MOVX    @DPTR, A
        ;
        MOV     DPTR,   #PWM4T1L            ; FF21H
        MOV     A,      #03H
        MOVX    @DPTR, A
        ;

; Set toggle point 2 of Channel-4 as 16
        MOV     DPTR,   #PWM4T2H            ; FF22H
        MOV     A,      #00H
        MOVX    @DPTR, A
        ;
        MOV     DPTR,   #PWM4T2L            ; FF23H
        MOV     A,      #10H
        MOVX    @DPTR, A
        ;

 ; Set Channel-4 output pin as default, and disable interrupting
        MOV     DPTR,   #PWM4CR             ; FF24H
        MOV     A,      #00H
        MOVX    @DPTR, A
        ;

 ; Clear EAXSFR to disable xSFR, return MOVX-DPTR to normal XRAM access
        MOV     A,      P_SW2
        ANL     A,      #01111111B
        MOV     P_SW2,  A
        ;

;; +-------------------------+
;; | Operate PWM output      |
;; +-------------------------+
 ; Enable counter counting, and enable Channel-4 output
        MOV     A,      PWMCR
        ORL     A,      #10000100B
        MOV     PWMCR,          A
        ;
```

STC MCU Limited.

The following code is to generate a waveform shown in following figure :

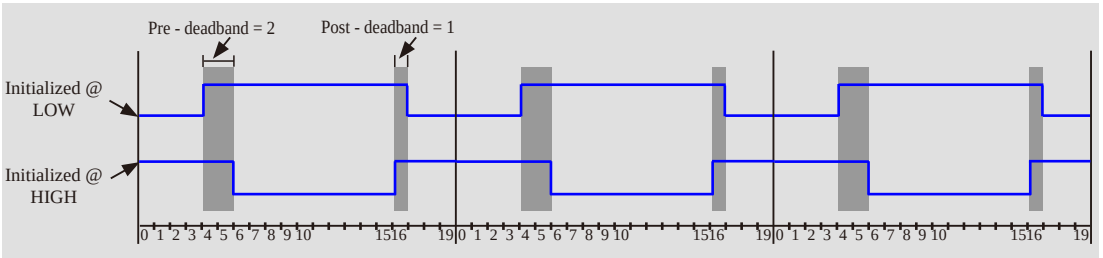

Period ==(16+1) Channel-4: toggle-point-1==3(0003H) toggle-point-2==16(0010H)
Channel-5: toggle-point-1==5(0005H) toggle-point-2==15(000FH)

```
;; +-----------------------------+
;; |  Global Configuration   |
;; +-----------------------------+

 ;;;
 ;;; Set EAXSFR to enable xSFR writing against XRAM writing
 ;;;
        MOV     A,      P_SW2
        ORL     A,      #10000000B
        MOV     P_SW2,  A
        ;

; Set channel-4 output register start at LOW, channel-5 at HIGH
        MOV     A,      PWMCFG
        ANL     A,      #11111011B          ; channel-4 start at LOW
        ORL     A,      #00001000B          ; channel-5 start at HIGH
        MOV     PWMCFG,         A
        ;

; Set a clock of the waveform generator consists of 4 Fosc
        MOV     DPTR,   #PWMCKS             ; FFF2H
        MOV     A,      #00000011B
        MOVX    @DPTR, A
        ;

; Set period as 20
; {PWMCH,PWMCL} <= 19
        MOV     DPTR,   #PWMCH              ; FFF0H
        MOV     A,      #00H                ; PWMCH should be changed first
        MOVX    @DPTR, A
        MOV     DPTR,   #PWMCL              ; FFF1H
        MOV     A,      #13H                ; Write PWMCL simultaneous update PWMCH
```

STC MCU Limited.

```
        MOVX   @DPTR, A
        ;

;; +--------------------------------+
;; |  Channel-4 Configuration   |
;; +--------------------------------+

 ; Set toggle point 1 of Channel-4 as 3
        MOV    DPTR,   #PWM4T1H              ; FF20H
        MOV    A,      #00H
        MOVX   @DPTR, A
        ;
        MOV    DPTR,   #PWM4T1L              ; FF21H
        MOV    A,      #03H
        MOVX   @DPTR, A
        ;
 ; Set toggle point 2 of Channel-4 as 16
        MOV    DPTR,   #PWM4T2H              ; FF22H
        MOV    A,      #00H
        MOVX   @DPTR, A
        ;
        MOV   DPTR,    #PWM4T2L              ; FF23H
        MOV   A,       #10H
        MOVX  @DPTR, A
        ;

 ; Set Channel-4 output pin as default, and disable interrupting
        MOV    DPTR,   #PWM4CR               ; FF24H
        MOV    A,      #00H
        MOVX   @DPTR, A
        ;

;; +--------------------------------+
;; |  Channel-5 Configuration   |
;; +--------------------------------+

 ; Set toggle point 1 of Channel-5 as 5
        MOV    DPTR,   #PWM5T1H              ; FF30H
        MOV    A,      #00H
        MOVX   @DPTR, A
        ;
        MOV    DPTR,   #PWM5T1L              ; FF31H
        MOV    A,      #03H
        MOVX   @DPTR, A
```

STC MCU Limited.

```
        ;
; Set toggle point 3 of Channel-5 as 15
        MOV     DPTR,   #PWM5T2H                ; FF32H
        MOV     A,      #00H
        MOVX    @DPTR, A
        ;
        MOV     DPTR,   #PWM5T2L                ; FF33H
        MOV     A,      #0FH
        MOVX    @DPTR, A
        ;

; Set Channel-5 output pin as default, and disable interrupting
        MOV     DPTR,   #PWM5CR                 ; FF34H
        MOV     A,      #00H
        MOVX    @DPTR, A
        ;

;;; Clear EAXSFR to disable xSFR, return MOVX-DPTR to normal XRAM access
        MOV     A,      P_SW2
        ANL     A,      #01111111B
        MOV     P_SW2,  A
        ;

;; +-----------------------------+
;; |  Operate PWM output         |
;; +-----------------------------+
; Enable counter counting, and enable Channel-4 and Channel-5 output
        MOV     A,      PWMCR
        ORL     A,      #10001100B
        MOV     PWMCR,          A
        ;
```

STC MCU Limited.

Chapter 13 Comparator of STC15W series MCU

There are the function of comparator for STC15W series MCU (such as STC15W401AS series, STC15W201S series, STC15W404S series, STC15W1K16S series and STC15W4K32S4 series). Thereinto, the internal structure of comparator of STC15W201S series, STC15W404S series and STC15W1K16S series is shown below:

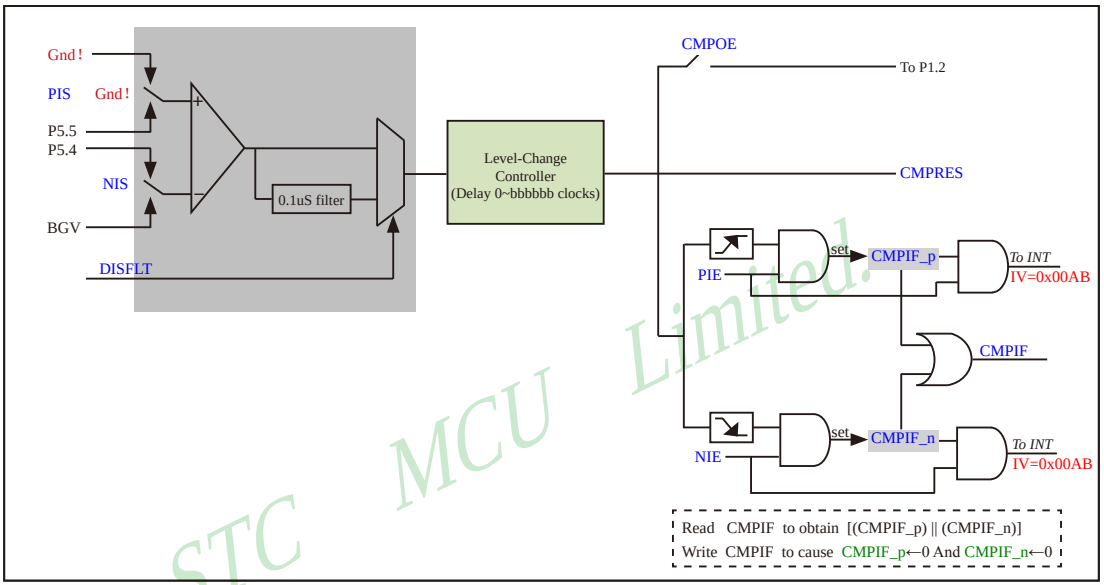

And, the internal structure of comparator of STC15W401AS and STC15W4K32S4 series (which have ADC function) is shown below:

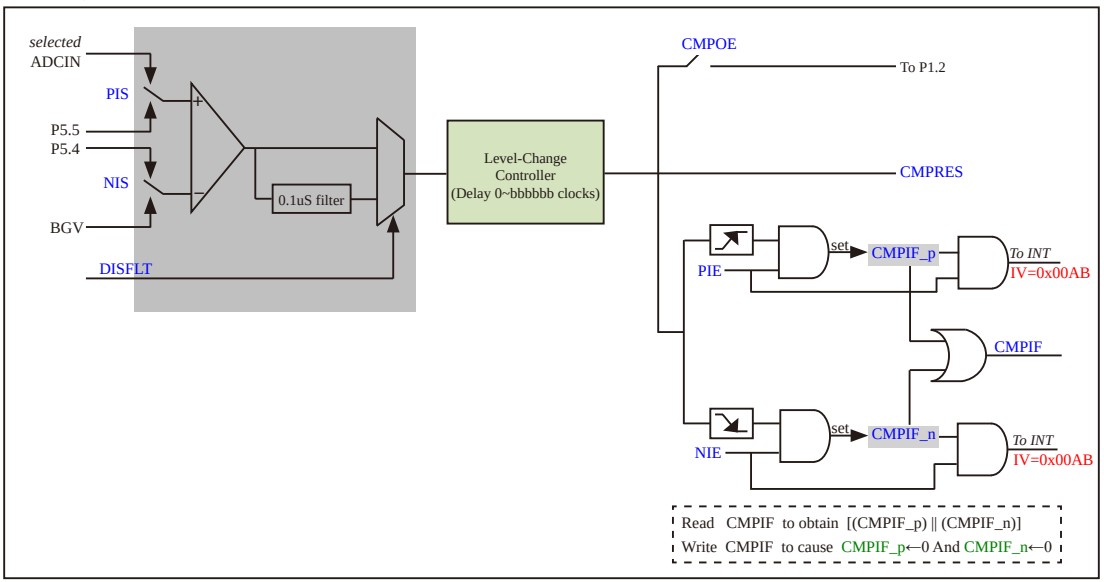

STC MCU Limited.

STC15W SFRs associated with comparator

Mnemonic	Description	Address	Bit address and Symbol								Reset Value
			B7	B6	B5	B4	B3	B2	B1	B0	
CMPCR1	Comparator Control Register 1	E6H	CMPEN	CMPIF	PIE	NIE	PIS	NIS	CMPOE	CMPRES	0000,0000
CMPCR2	Comparator Control Register 2	E7H	INVCMPO	DISFLT	LCDTY[5:0]						0000,1001

1. Comparator Control Register 1 CMPCR1

SFR name	Address	bit	B7	B6	B5	B4	B3	B2	B1	B0
CMPCR1	E6H	name	CMPEN	CMPIF	PIE	NIE	PIS	NIS	CMPOE	CMPRES

CMPEN：Enable bit of Comparator

CMPEN=1，Enable comparator；

CMPEN=0，Disable comparator, powering off the comparator.

STC MCU Limited.

CMPIF：Interrupt Flag bit of Comparator

When CMPEN = 1：

if the comparing result has changed from low to high and if PIE has been set to 1, a built-in register bit named CMPIF_p would be set to 1；

else if the comparing result has changed from high to low and if NIE has been set to 1, another built-in register bit named CMPIF_n would be set to 1；

If CPU go to read the value of CMPIF , the (CMPIF_p || CMPIF_n) would be read;

If CPU write 0 into CMPIF, the value of CMPIF_p and CMPIF_n would all be cleared .

And the conditions of generating comparator interrupt are

[(EA==1) && (((PIE==1)&&(CMPIF_p==1)) || ((NIE==1)&&(CMPIF_n==1)))]

CMPIF must be cleared manually by software after that CPU has responded to the interrupt.

PIE： Pos-edge Interrupt Enabling bit

PIE = 1，enable the comparator interrupt responding to the comparing result changed from low to high；

PIE = 0，disable the comparator interrupt responding to the comparing result changed from low to high.

NIE： Neg-edge Interrupt Enabling bit

NIE = 1，enable the comparator interrupt responding to the comparing result changed from high to low；

NIE = 0，disable the comparator interrupt responding to the comparing result changed from high to low.

PIS： bit to choose the postive pole of comparator

PIS = 1，choose ADCIN determined by ADCIS[2:0] as the postive pole of comparator；

PIS = 0，choose external pin P5.5 as the postive pole of comparator.

NIS： bit to choose the negative pole of comparator

NIS = 1，choose external pin P5.4 as the negative pole of comparator；

NIS = 0，choose internal BandGap Votage BGV as the negative pole of comparator.

CMPOE：Control bit of outputing comparing result

CMPOE = 1，Make the comparing result of comparator outputting on **P1.2**；

CMPOE = 0，Forbid the comparing result of comparator outputting.

CMPRES：Flag bit of Comparator Result

CMPRES = 1，the level of CMP+ is higher than CMP-(or the reference voltage of internal BandGap)；

CMPRES = 0，the level of CMP+ is lower than CMP-(or the reference voltage of internal BandGap).

the bit CMPRES is a read-only one, so it doesn't make sense to write some value into it by software.

2. Comparator Control Register 2 CMPCR2

SFR name	Address	bit	B7	B6	B5	B4	B3	B2	B1	B0
CMPCR2	E7H	name	INVCMPO	DISFLT	LCDTY[5:0]					

INVCMPO：Inverse Comparator Output

INVCMPO = 1，Output the comparing result of comparator on P1.2 after inversing them；

INVCMPO = 0，Normal output the comparing result of comparator on P1.2.

DISFLT：Disable the 0.1uS Filter output by comparator

DISFLT = 1，disbale 0.1uS Filter output by comparator；

DISFLT = 0，enable the 0.1uS Filter output by comparator。

LCDTY[5:0]：set the Duty of Level-Change control filter in the output terminal of comparator

bbbbbb：=

If the comparing result had changed from low to high, only when the high state has beed holded on at least bbbbbb clocks would the comparing result of comparator be affirmed to have changed from low to high；

Else the CPU would believe nothing happended；

If the comparing result had changed from high to low, only when the low state has beed holded on at least bbbbbb clocks would the comparing result of comparator be affirmed to have changed from high to low；

Else the CPU would believe nothing happended.

It means no Level-Change Control if LCDTY[5:0] be set to 000000.

STC MCU Limited.

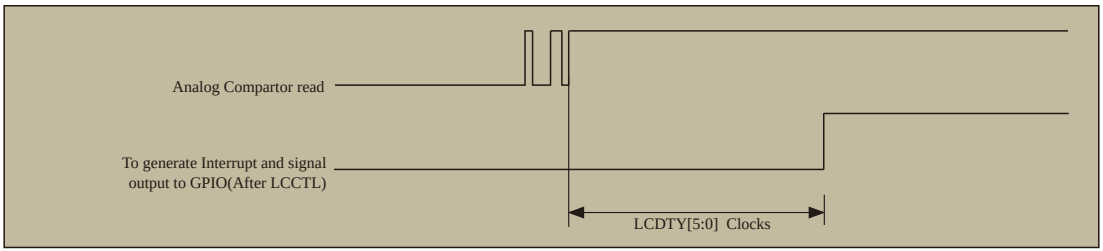

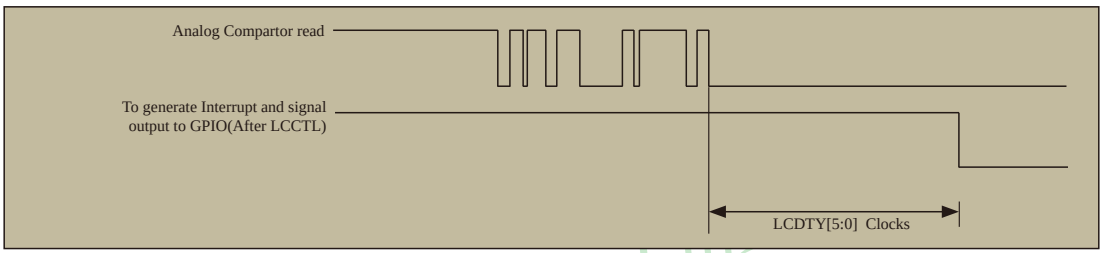

13.1 Comparator Demo Program using Interrupt(C and ASM)

1. C Program Listing

```
/*---------------------------------------------------------------------------------------------------*/
/* --- STC MCU Limited. ----------------------------------------------------------------------------*/
/* --- Comparator Demo Program using interrupt -----------------------------------------------------*/
/* --- Mobile: (86)13922805190 ---------------------------------------------------------------------*/
/* --- Fax: 86-755-82905966 ------------------------------------------------------------------------*/
/* --- Tel: 86-755-82948412 ------------------------------------------------------------------------*/
/* --- Web: www.STCMCU.com -------------------------------------------------------------------------*/
/* If you want to use the program or the program referenced in the -----------------------------*/
/* article, please specify in which data and procedures from STC -------------------------------*/
/*---- In Keil C development environment, select the Intel 8052 to compiling ------------------*/
/*----  And only contain < reg51.h > as header file ---------------------------------------------*/
/*---------------------------------------------------------------------------------------------------*/

//suppose the frequency of test chip is 18.432MHz

#include "reg51.h"
#include "intrins.h"

sfr     CMPCR1  =   0xE6;           //Comparator control register 1
#define CMPEN       0x80            //CMPCR1.7 : Enable bit of comparator
#define CMPIF       0x40            //CMPCR1.6 : Interrupt flag bit of comparator
#define PIE         0x20            //CMPCR1.5 : Pos-edge Interrupt Enabling bit
```

```
#define   NIE              0x10          //CMPCR1.4 : Neg-edge Interrupt Enabling bit
#define   PIS              0x08          //CMPCR1.3 : bit to choose the postive pole of comparator
#define   NIS              0x04          //CMPCR1.2 : bit to choose the negative pole of comparator
#define   CMPOE            0x02          //CMPCR1.1 : Control bit of outputing comparing result
#define   CMPRES           0x01          //CMPCR1.0 : Flag bit of Comparator Result

sfr       CMPCR2    =      0xE7;         //Comparator control register 2
#define   INVCMPO          0x80          //CMPCR2.7 : Inverse Comparator Output
#define   DISFLT           0x40          //CMPCR2.6 : Disable the 0.1uS Filter output by comparator
#define   LCDTY            0x3F          //CMPCR2.[5:0] : set the Duty of Level-Change control filter in
                                         //the output terminal of comparator

sbit      LED       =      P1^1;         //Test pin

void cmp_isr() interrupt 21 using 1      //Comparator interrupt vector
{
        CMPCR1 &= ~CMPIF;                //Clear the finishing flag
        LED = !!(CMPCR1 & CMPRES);       //Output the result CMPRES to test pin to display
}

void main()
{
        CMPCR1 = 0;                      //Initilize the Comparator control register 1
        CMPCR2 = 0;                      //Initilize the Comparator control register 2

        CMPCR1 &= ~PIS;                  //choose external pin P5.5(CMP+) as the postive pole of comparator
//      CMPCR1 |= PIS;                   //choose ADCIN  determined by ADCIS[2:0]
                                         //as the postive pole of comparator

        CMPCR1 &= ~NIS;                  //choose internal BandGap Votage BGV
                                         //as the negative pole of comparator
//      CMPCR1 |= NIS;                   //choose external pin P5.4(CMP-)as the negative pole of comparator

        CMPCR1 &= ~CMPOE;                //Forbid the comparing result of comparator outputting
//      CMPCR1 |= CMPOE;                 //Make the comparing result of comparator outputting on P1.2

        CMPCR2 &= ~INVCMPO;              //Normal output the comparing result of comparator on P1.2
//      CMPCR2 |= INVCMPO;               //Output the comparing result of comparator on P1.2
                                         //after inversing them

        CMPCR2 &= ~DISFLT;               //enable the 0.1uS Filter output by comparator
//      CMPCR2 |= DISFLT;                //disbale 0.1uS Filter output by comparator

        CMPCR2 &= ~LCDTY;
```

STC MCU Limited.

```
//          CMPCR2 |= (DISFLT & 0x10);

            CMPCR1 |= PIE;                  //Enable Pos-edge Interrupt
//          CMPCR1 |= NIE;                  //Enable Neg-edge Interrupt

            CMPCR1 |= CMPEN;                //Enable Comparator

            EA = 1;

            while (1);
}
```

2. Assembler Listing

STC MCU Limited.

```
/*-------------------------------------------------------------------------------------------------*/
/* --- STC MCU  Limited. ---------------------------------------------------------------------------*/
/* --- Comparator Demo Program using interrupt -----------------------------------------------------*/
/* --- Mobile: (86)13922805190 ---------------------------------------------------------------------*/
/* --- Fax: 86-755-82905966 ------------------------------------------------------------------------*/
/* --- Tel: 86-755-82948412 ------------------------------------------------------------------------*/
/* --- Web: www.STCMCU.com -------------------------------------------------------------------------*/
/* If you want to use the program or the program referenced in the  ----------------------------*/
/* article, please specify in which data and procedures from STC    ----------------------------*/
/*---- In Keil C development environment, select the Intel 8052 to compiling ------------------*/
/*----  And only contain < reg51.h > as header file ------------------------------------------------*/
/*-------------------------------------------------------------------------------------------------*/

//suppose the frequency of test chip is 18.432MHz

CMPCR1          DATA    0E6H            ;Comparator control register 1
CMPEN           EQU     080H            ;CMPCR1.7 : Enable bit of comparator
CMPIF           EQU     040H            ;CMPCR1.6 : Interrupt flag bit of comparator
PIE             EQU     020H            ;CMPCR1.5 : Pos-edge Interrupt Enabling bit
NIE             EQU     010H            ;CMPCR1.4 : Neg-edge Interrupt Enabling bit
PIS             EQU     008H            ;CMPCR1.3 : bit to choose the postive pole of comparator
NIS             EQU     004H            ;CMPCR1.2 : bit to choose the negative pole of comparator
CMPOE           EQU     002H            ;CMPCR1.1 : Control bit of outputing comparing result
CMPRES          EQU     001H            ;CMPCR1.0 : Flag bit of Comparator Result

CMPCR2          DATA    0E7H            ;Comparator control register 2
INVCMPO         EQU     080H            ;CMPCR2.7 : Inverse Comparator Output
DISFLT          EQU     040H            ;CMPCR2.6 : Disable the 0.1uS Filter output by comparator
```

```
LCDTY       EQU     03FH        ;CMPCR2.[5:0] : set the Duty of Level-Change control filter in
                                ;the output terminal of comparator

LED         BIT     P1.1        ;Test pin
;-------------------------------------------
        ORG     0000H
        LJMP    MAIN

        ORG     00ABH
        LJMP    CMP_ISR                 ;Comparator interrupt vector

;-------------------------------------------
        ORG     0100H
MAIN:
        MOV     CMPCR1,     #0          ;Initilize the Comparator control register 1
        MOV     CMPCR2,     #0          ;Initilize the Comparator control register 2

        ANL     CMPCR1,     #NOT PIS
                ;choose external pin P5.5(CMP+) as the postive pole of comparator

//      ORL     CMPCR1,     #PIS
                ;choose ADCIN  determined by ADCIS[2:0] as the postive pole of comparator

        ANL     CMPCR1,     #NOT NIS
                ;choose internal BandGap Votage BGV as the negative pole of comparator
//      ORL     CMPCR1,     #NIS
                ;choose external pin P5.4(CMP-)as the negative pole of comparator

        ANL     CMPCR1,     #NOT CMPOE
                ;Forbid the comparing result of comparator outputting
//      ORL     CMPCR1,     #CMPOE
                ;Make the comparing result of comparator outputting on P1.2

        ANL     CMPCR2,     #NOT INVCMPO
                ;Normal output the comparing result of comparator on P1.2
//      ORL     CMPCR2,     #INVCMPO
                ;Output the comparing result of comparator on P1.2 after inversing them
        ANL     CMPCR2,     #NOT DISFLT
                                        ;enable the 0.1uS Filter output by comparator
//      ORL     CMPCR2,     #DISFLT
                                        ;disbale 0.1uS Filter output by comparator

        ANL     CMPCR2,     #NOT LCDTY
//      ORL     CMPCR2,     #(DISFLT AND 0x10)
```

STC MCU Limited.

```
        ORL     CMPCR1,         #PIE            ;Enable Pos-edge Interrupt
//      ORL     CMPCR1,         #NIE            ;Enable Neg-edge Interrupt
        ORL     CMPCR1,         #CMPEN          ;Enable Comparator

        SETB    EA

        SJMP    $

;----------------------------------------
CMP_ISR:
        PUSH    PSW
        PUSH    ACC

        ANL     CMPCR1,         #NOT CMPIF      ;Clear the finishing flag
        MOV     A,      CMPCR1
        MOV     C,      ACC.0                   ;Output the result CMPRES to test pin to display
        MOV     LED,    C

        POP     ACC
        POP     PSW
        RETI
;----------------------------------------
        END
```

STC MCU Limited.

13.2 Comparator Demo Program using Polling(C and ASM)

1. C Program Listing

```
/*-------------------------------------------------------------------------------------------------*/
/* --- STC MCU  Limited. ---------------------------------------------------------------------------*/
/* --- Comparator Demo Program using polling -------------------------------------------------------*/
/* --- Mobile: (86)13922805190 ---------------------------------------------------------------------*/
/* --- Fax: 86-755-82905966 ------------------------------------------------------------------------*/
/* --- Tel: 86-755-82948412 ------------------------------------------------------------------------*/
/* --- Web: www.STCMCU.com -------------------------------------------------------------------------*/
/* If you want to use the program or the program referenced in the  ----------------------------*/
/* article, please specify in which data and procedures from STC    ----------------------------*/
/*---- In Keil C development environment, select the Intel 8052 to compiling ------------------*/
/*----  And only contain < reg51.h > as header file ---------------------------------------------*/
/*-------------------------------------------------------------------------------------------------*/

//suppose the frequency of test chip is 18.432MHz

#include "reg51.h"
#include "intrins.h"

sfr     CMPCR1=  0xE6;      //Comparator control register 1
#define CMPEN    0x80       //CMPCR1.7 : Enable bit of comparator
#define CMPIF    0x40       //CMPCR1.6 : Interrupt flag bit of comparator
#define PIE      0x20       //CMPCR1.5 : Pos-edge Interrupt Enabling bit
#define NIE      0x10       //CMPCR1.4 : Neg-edge Interrupt Enabling bit
#define PIS      0x08       //CMPCR1.3 : bit to choose the postive pole of comparator
#define NIS      0x04       //CMPCR1.2 : bit to choose the negative pole of comparator
#define CMPOE    0x02       //CMPCR1.1 : Control bit of outputing comparing result
#define CMPRES   0x01       //CMPCR1.0 : Flag bit of Comparator Result

sfr     CMPCR2   =  0xE7;   //Comparator control register 2
#define INVCMPO  0x80       //CMPCR2.7 : Inverse Comparator Output
#define DISFLT   0x40       //CMPCR2.6 : Disable the 0.1uS Filter output by comparator
#define LCDTY    0x3F       //CMPCR2.[5:0] : set the Duty of Level-Change control filter in
                            //the output terminal of comparator

sbit    LED   =  P1^1;      //Test pin

void main()
{
    CMPCR1 = 0;             //Initilize the Comparator control register 1
    CMPCR2 = 0;             //Initilize the Comparator control register 2
```

STC MCU Limited.

```
        CMPCR1 &= ~PIS;         //choose external pin P5.5(CMP+) as the postive pole of comparator
//      CMPCR1 |= PIS;          //choose ADCIN  determined by ADCIS[2:0]
                                //as the postive pole of comparator
        CMPCR1 &= ~NIS;         //choose internal BandGap Votage BGV
                                //as the negative pole of comparator
//      CMPCR1 |= NIS;          //choose external pin P5.4(CMP-)as the negative pole of comparator

        CMPCR1 &= ~CMPOE;               //Forbid the comparing result of comparator outputting
//      CMPCR1 |= CMPOE;                //Make the comparing result of comparator outputting on P1.2

        CMPCR2 &= ~INVCMPO;             //Normal output the comparing result of comparator on P1.2
//      CMPCR2 |= INVCMPO;              //Output the comparing result of comparator on P1.2
                                        //after inversing them

        CMPCR2 &= ~DISFLT;              //enable the 0.1uS Filter output by comparator
//      CMPCR2 |= DISFLT;               //disbale 0.1uS Filter output by comparator

        CMPCR2 &= ~LCDTY;
//      CMPCR2 |= (DISFLT & 0x10);

        CMPCR1 |= CMPEN;                //Enable Comparator
        while (!(CMPCR1 & CMPIF));      //Query the finishing flag
        CMPCR1 &= ~CMPIF;               //Clear the finishing flag
        LED = !!(CMPCR1 & CMPRES);      //Output the result CMPRES to test pin to display

        while (1);
}
```

STC MCU Limited.

2. Assembler Listing

```
/*-------------------------------------------------------------------------------------------------------*/
/* --- STC MCU  Limited. ---------------------------------------------------------------------------*/
/* --- Comparator Demo Program using polling -------------------------------------------------------*/
/* --- Mobile: (86)13922805190 ---------------------------------------------------------------------*/
/* --- Fax: 86-755-82905966 ------------------------------------------------------------------------*/
/* --- Tel: 86-755-82948412 ------------------------------------------------------------------------*/
/* --- Web: www.STCMCU.com -------------------------------------------------------------------------*/
/* If you want to use the program or the program referenced in the  ----------------------------*/
/* article, please specify in which data and procedures from STC    ----------------------------*/
/*---- In Keil C development environment, select the Intel 8052 to compiling ------------------*/
/*----  And only contain < reg51.h > as header file ------------------------------------------------*/
/*-------------------------------------------------------------------------------------------------------*/

//suppose the frequency of test chip is 18.432MHz
```

```
CMPCR1          DATA    0E6H            ;Comparator control register 1
CMPEN           EQU     080H            ;CMPCR1.7 : Enable bit of comparator
CMPIF           EQU     040H            ;CMPCR1.6 : Interrupt flag bit of comparator
PIE             EQU     020H            ;CMPCR1.5 : Pos-edge Interrupt Enabling bit
NIE             EQU     010H            ;CMPCR1.4 : Neg-edge Interrupt Enabling bit
PIS             EQU     008H            ;CMPCR1.3 : bit to choose the postive pole of comparator
NIS             EQU     004H            ;CMPCR1.2 : bit to choose the negative pole of comparator
CMPOE           EQU     002H            ;CMPCR1.1 : Control bit of outputing comparing result
CMPRES          EQU     001H            ;CMPCR1.0 : Flag bit of Comparator Result

CMPCR2          DATA    0E7H            ;Comparator control register 2
INVCMPO         EQU     080H            ;CMPCR2.7 : Inverse Comparator Output
DISFLT          EQU     040H            ;CMPCR2.6 : Disable the 0.1uS Filter output by comparator
LCDTY           EQU     03FH            ;CMPCR2.[5:0] : set the Duty of Level-Change control filter in
                                        ;the output terminal of comparator

LED             BIT     P1.1            ;Test pin
;-------------------------------------
        ORG     0000H
        LJMP    MAIN
;-------------------------------------
        ORG     0100H
MAIN:
        MOV     CMPCR1,     #0          ;Initilize the Comparator control register 1
        MOV     CMPCR2,     #0          ;Initilize the Comparator control register 2

        ANL     CMPCR1,     #NOT PIS
                ;choose external pin P5.5(CMP+) as the postive pole of comparator

//      ORL     CMPCR1,     #PIS
                ;choose ADCIN  determined by ADCIS[2:0] as the postive pole of comparator

        ANL     CMPCR1,     #NOT NIS
                ;choose internal BandGap Votage BGV as the negative pole of comparator
//      ORL     CMPCR1,     #NIS
                ;choose external pin P5.4(CMP-)as the negative pole of comparator

        ANL     CMPCR1,     #NOT CMPOE
                ;Forbid the comparing result of comparator outputting
//      ORL     CMPCR1,     #CMPOE
                ;Make the comparing result of comparator outputting on P1.2

        ANL     CMPCR2,     #NOT INVCMPO
                ;Normal output the comparing result of comparator on P1.2
```

STC MCU Limited.

```
//      ORL     CMPCR2,     #INVCMPO
                        ;Output the comparing result of comparator on P1.2 after inversing them
        ANL     CMPCR2,     #NOT DISFLT
                                        ;enable the 0.1uS Filter output by comparator
//      ORL     CMPCR2,     #DISFLT
                                        ;disbale 0.1uS Filter output by comparator

        ANL     CMPCR2,     #NOT LCDTY
//      ORL     CMPCR2,     #(DISFLT AND 0x10)

        ORL     CMPCR1,     #CMPEN      ;Enable Comparator
WAIT:
        MOV     A,          CMPCR1      ;Query the finishing flag

        ANL     A,          #CMPIF
        JZ      WAIT
        ANL     CMPCR1,     #NOT CMPIF  ;Clear the finishing flag
        MOV     A,          CMPCR1
        MOV     C,          ACC.0       ;Output the result CMPRES to test pin to display
        MOV     LED,        C

        SJMP    $

        END
```

STC MCU Limited.

Chapter 14 Capacitive Sensing Touch Key
—— Achieved by ADC of STC15 series

Touch key as the most important way of human interaction is one of the most common circuit modules. Key may be include engine inducing key-press and non engine inducing key-press.For engine inducing key-press,eSpecially cheap ones, they have a disadvantage which is easily destroyed.However, for the non engine ones, they have longer serving life and are more convenient to use because of withnot mechanical contact.

Capacitive sensing touch key is one of the cheapest non engine keys. Now let us to learn about how to achieve capacitive sensing touch key by ADC of STC15 series MCU.

The next threee circuit figures with the same principle are the most often used. Take the fig.2 for example in this article.

STC MCU Limited.

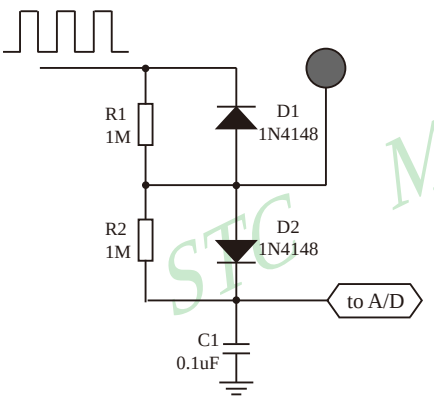

Fig. 1

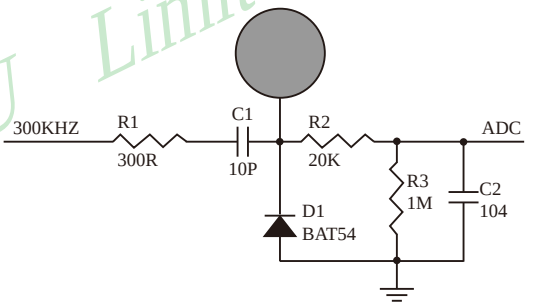

Fig. 2

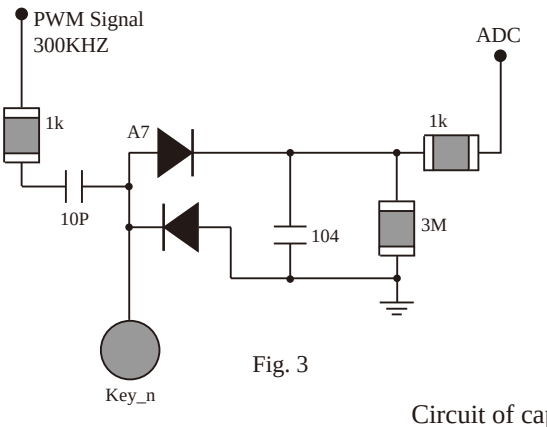

Fig. 3

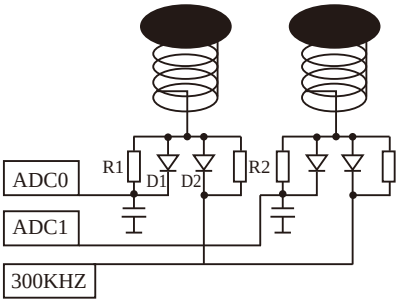

Fig. 4 touch key with sensing spring

Circuit of capacitive sensing touch key

Circuit capacitive sensing touch key of Fig.4 may be used in practice to expand the area pressed by finger with sensing spring. The sensing spring has a capacitor Cp to earth, which is equaviant to a metal plate to earth. When the sensing spring has been pressed by a finger, the capacitor Cp of sensing spring to earth will in parallel with another capacitor CF to earth, shown as the below figure.

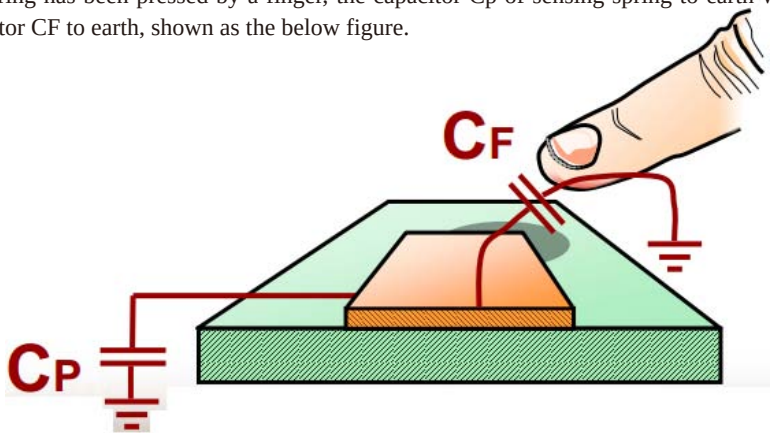

Now let us explain the circuit : the 300KHz square wares input voltage is divided by the capacitor Cp of sensing spring to earth in parallel with the finger capation CF and in series with the capacitor C1, and then rectified by the diode D1, and sended to ADC after filtered by R2 and C2. If a finger go to press the touch key, the voltage sended to the ADC will be decreased result in the touch gesture can be detected by the program

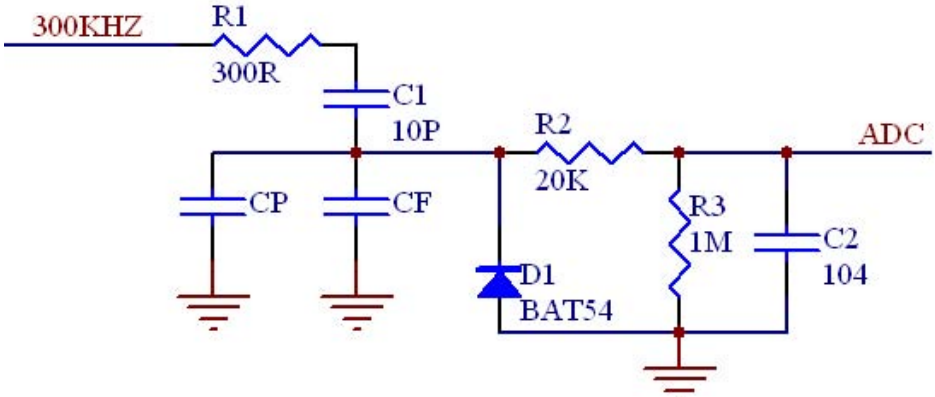

The following text is the detail program of utilizing ADC of STC15 series to achieve the capactive sensing touch key.

1. C Program Listing

```
/*---------------------------------------------------------------------------------------------------------------*/
/* --- STC MCU  Limited. ---------------------------------------------------------------------------------------*/
/* ---  Demo Program utilizing ADC of STC15 series to achieve the capactive sensing touch key -------*/
/* --- Mobile: (86)13922805190 ----------------------------------------------------------------------------*/
/* --- Fax: 86-755-82905966 -------------------------------------------------------------------------------*/
/* --- Tel: 86-755-82948412 -------------------------------------------------------------------------------*/
/* --- Web: www.STCMCU.com --------------------------------------------------------------------------------*/
/* If you want to use the program or the program referenced in the  ----------------------------------------*/
```

```
/* article, please specify in which data and procedures from STC  ----------*/
/*---- In Keil C development environment, select the Intel 8052 to compiling ----------*/
/*----  And only contain < reg51.h > as header file ----------*/
/*---------------------------------------------------------------------------------------*/

/*************    function declaration          ***************

Take ADC of STC15W401AS MCU for example
.
//suppose the frequency of test chip is 24MHz
*****************************************/

#include  <reg51.h>
#include  <intrins.h>

#define MAIN_Fosc                 24000000UL      //Define the master clock

typedef   unsigned char     u8;
typedef   unsigned int      u16;
typedef   unsigned long     u32;

#define   Timer0_Reload     (65536UL -(MAIN_Fosc / 600000))
                                    //the reload value of  Timer 0, correspond to 300KHZ

sfr       P1ASF     = 0x9D;         //Only write，select anolog input
sfr       ADC_CONTR = 0xBC;
sfr       ADC_RES   = 0xBD;
sfr       ADC_RESL  = 0xBE;
sfr       AUXR      = 0x8E;
sfr       AUXR2     = 0x8F;

/*************    Define Constant     ***************/

#define   TOUCH_CHANNEL       8       //number of ADC channels

#define ADC_90T  (3<<5)               //ADC time  90T
#define ADC_180T (2<<5)               //ADC time  180T
#define ADC_360T (1<<5)               //ADC time  360T
#define ADC_540T 0                    //ADC time  540T
#define ADC_FLAG  (1<<4)              //clear by software
#define ADC_START (1<<3)              //clear Automatically

/*************    Define Variable     ***************/
sbit      P_LED7 = P2^7;
```

STC MCU Limited.

```
sbit        P_LED6 = P2^6;
sbit        P_LED5 = P2^5;
sbit        P_LED4 = P2^4;
sbit        P_LED3 = P2^3;
sbit        P_LED2 = P2^2;
sbit        P_LED1 = P2^1;
sbit        P_LED0 = P2^0;

u16         idata adc[TOUCH_CHANNEL];                   //ADC value at present
u16         idata adc_prev[TOUCH_CHANNEL];              //last ADC value
u16         idata TouchZero[TOUCH_CHANNEL];             //ADC value of  0
u8          idata TouchZeroCnt[TOUCH_CHANNEL];          //track for and count from 0 automatically

u8          cnt_250ms;

/**************     Define Function     **************/
void        delay_ms(u8 ms);
void        ADC_init(void);
u16         Get_ADC10bitResult(u8 channel);
void        AutoZero(void);
u8          check_adc(u8 index);
void        ShowLED(void);

/********************* Main Funciton **************************/
void main(void)
{
        u8          i;

        delay_ms(50);

        ET0 = 0;
        TR0 = 0;
        AUXR |=  0x80;                          //Timer0 set as 1T mode
        AUXR2 |= 0x01;                          //Enable output clock
        TMOD = 0;                               //Timer0 set as Timer, 16 bits Auto Reload.
        TH0 = (u8)(Timer0_Reload >> 8);
        TL0 = (u8)Timer0_Reload;
        TR0 = 1;

        ADC_init();                             //Initialize ADC
        delay_ms(50);                           //Delay  50ms

        for(i=0; i<TOUCH_CHANNEL; i++)
        {
```

STC MCU Limited.

```
                adc_prev[i]  = 1023;
                TouchZero[i] = 1023;
                TouchZeroCnt[i] = 0;
        }
        cnt_250ms = 0;

        while (1)
        {
                delay_ms(50);                   //Dispose the touch key every 50ms
                ShowLED();
                if(++cnt_250ms >= 5)
                {
                        cnt_250ms = 0;
                        AutoZero();             //Dispose the function AutoZero() every 250ms
                }

        }
}
/*********************************************/

//=========================================================================
// Function:        void  delay_ms(unsigned char ms)
// Description:     Delay function
// Parameter:       ms, time to delay, only among 1~255ms.
// Return:          none.
// Version:         VER1.0
// Date:            2013-4-1
// Remark:
//=========================================================================
void  delay_ms(u8 ms)
{
    unsigned int i;
        do {
                i = MAIN_Fosc / 13000;
                while(--i) ;
        }while(--ms);
}
/*************  Initialize ADC   *****************/
void    ADC_init(void)
{
        P1ASF = 0xff;                           //8 channels ADC
        ADC_CONTR = 0x80;                       //Enable ADC
}
```

STC MCU Limited.

```
//========================================================================
// Function:        u16    Get_ADC10bitResult(u8 channel)
// Description:     Read ADC reslut by querying.
// Parameter:       channel: choose ADC to convert.
// Return:          10 bits ADC result.
// Version:                V1.0, 2012-10-22
//========================================================================
u16     Get_ADC10bitResult(u8 channel)      //channel = 0~7
{
        ADC_RES  = 0;
        ADC_RESL = 0;
        ADC_CONTR = 0x80 | ADC_90T | ADC_START | channel;           // trigger ADC
        _nop_();
        _nop_();
        _nop_();
        _nop_();
        while((ADC_CONTR & ADC_FLAG) == 0)      ;           //Waiting for finishing converting of ADC
        ADC_CONTR = 0x80;                                   //Clear flag
        return(((u16)ADC_RES << 2) | ((u16)ADC_RESL & 3));  //Return the ADC result
}

/********************** Track for the 0 automatically **************************/
void    AutoZero(void)              //Call the function every 250ms
{
        u8      i;
        u16     j,k;

        for(i=0; i<TOUCH_CHANNEL; i++)              //Deal with 8 channels
        {
                j = adc[i];
                k = j - adc_prev[i];                //read one value before decrease
                F0 = 0;                             //press
                if(k & 0x8000)      F0 = 1,    k = 0 - k; //release   to get the difference value of two sample
                if(k >= 20)                         //the difference is large
                {
                        TouchZeroCnt[i] = 0;        //If the difference is large，clear the counter
                        if(F0)      TouchZero[i] = j;   //If  release and the difference is large,replace directly
                }
                else                                //the difference is samll,wriggle,track for 0 automatically
                {
                        if(++TouchZeroCnt[i] >= 20)
                        {
                                TouchZeroCnt[i] = 0;
                                TouchZero[i] = adc_prev[i];
                        }
                }
                adc_prev[i] = j;    //Save the sample value of this time
        }
}
```

STC MCU Limited.

```
/**********************Get the touch action , this function is called every 50ms************************/
u8   check_adc(u8 index)                                        //Judge press or release
{
        u16     delta;
        adc[index] = 1023 - Get_ADC10bitResult(index);          //Get the value of ADC to translate the
                                                                //press action, increase the value of ADC
        if(adc[index] < TouchZero[index])       return  0;      //If the ADC value is smaller than 0,
                                                                //release action will be regarded as happening
        delta = adc[index] - TouchZero[index];
        if(delta >= 40)     return 1;                           //Press
        if(delta <= 20)     return 0;                           //Release
        return      2;                                          //Hold on
}

/********************** Deal with the  touch action, this function is called every 50ms ***************/
void    ShowLED(void)
{
        u8      i;

        i = check_adc(0);
        if(i == 0)          P_LED0 = 1;     //LED indicator is off
        if(i == 1)          P_LED0 = 0;     //LED indicator is on

        i = check_adc(1);
        if(i == 0)          P_LED1 = 1;     //LED indicator is off
        if(i == 1)          P_LED1 = 0;     //LED indicator is on

        i = check_adc(2);
        if(i == 0)          P_LED2 = 1;     //LED indicator is off
        if(i == 1)          P_LED2 = 0;     //LED indicator is on

        i = check_adc(3);
        if(i == 0)          P_LED3 = 1;     //LED indicator is off
        if(i == 1)          P_LED3 = 0;     //LED indicator is on

        i = check_adc(4);
        if(i == 0)          P_LED4 = 1;     //LED indicator is off
        if(i == 1)          P_LED4 = 0;     //LED indicator is on

        i = check_adc(5);
        if(i == 0)          P_LED5 = 1;     //LED indicator is off
        if(i == 1)          P_LED5 = 0;     //LED indicator is on

        i = check_adc(6);
        if(i == 0)          P_LED6 = 1;     //LED indicator is off
        if(i == 1)          P_LED6 = 0;     //LED indicator is on

        i = check_adc(7);
        if(i == 0)          P_LED7 = 1;     //LED indicator is off
        if(i == 1)          P_LED7 = 0;     //LED indicator is on

}
```

STC MCU Limited.

2. Assembler Listing

```
/*---------------------------------------------------------------------------------------------------------------*/
/* --- STC MCU  Limited. ---------------------------------------------------------------------------------------*/
/* ---  Demo Program utilizing ADC of STC15 series to achieve the capactive sensing touch key -------*/
/* --- Mobile: (86)13922805190 ---------------------------------------------------------------------------------*/
/* --- Fax: 86-755-82905966 ------------------------------------------------------------------------------------*/
/* --- Tel: 86-755-82948412 ------------------------------------------------------------------------------------*/
/* --- Web: www.STCMCU.com -------------------------------------------------------------------------------------*/
/* If you want to use the program or the program referenced in the  ----------------------------------------*/
/* article, please specify in which data and procedures from STC    ----------------------------*/
/*---- In Keil C development environment, select the Intel 8052 to compiling ----------------*/
/*----  And only contain < reg51.h > as header file ------------------------------------------------*/
/*---------------------------------------------------------------------------------------------------------------*/

/**************     function declaration          ***************

Take ADC of STC15W401AS MCU for example
.
//suppose the frequency of test chip is 24MHz
*****************************************/

;/*********************************** Define Macro ************************************/

Fosc_KHZ        EQU   24000                 ;Define the master clock KHZ

STACK_POIRTER EQU   0D0H                    ;Start Address of stack

Timer0_Reload   EQU   (65536 - Fosc_KHZ/600)    ;the reload value of  Timer 0, correspond to 300KHZ

;*************************************************************************
;*************************************************************************

P1ASF           DATA  0x9D;                 ;Only write，select anolog input
ADC_CONTR       DATA  0xBC;
ADC_RES         DATA  0xBD;
ADC_RESL        DATA  0xBE;
AUXR            DATA  0x8E;
AUXR2           DATA  0x8F;

/**************     Define Constant     ***************/
TOUCH_CHANNEL       EQU     8                       ;number of ADC channels
ADC_90T         EQU   (3 SHL 5)                 ;ADC time  90T
ADC_180T        EQU   (2 SHL 5)                 ;ADC time  180T
```

STC MCU Limited.

```
ADC_360T        EQU (1 SHL 5)                   ;ADC time  360T
ADC_540T        EQU 0                           ;ADC time  540T
ADC_FLAG        EQU (1 SHL 4)                   ;clear by software
ADC_START       EQU (1 SHL 3)                   ;clear Automatically

/*************  Define Variable     **************/
P_LED7  BIT     P2.7;
P_LED6  BIT     P2.6;
P_LED5  BIT     P2.5;
P_LED4  BIT     P2.4;
P_LED3  BIT     P2.3;
P_LED2  BIT     P2.2;
P_LED1  BIT     P2.1;
P_LED0  BIT     P2.0;

adc             EQU     30H     ;       ADC value at present        30H~3FH, a value with two bytes
adc_prev        EQU     40H     ;       last ADC value      40H~4FH, a value with two bytes
TouchZero       EQU     50H     ;       ADC value of  0     50H~5FH,  a value with two bytes
TouchZeroCnt    EQU     60H     ;       rack for and count from 0 automatically         60H~67H

cnt_250ms       DATA    68H     ;

;*******************************************************************
;*******************************************************************
                ORG     00H                             ;reset
                LJMP    F_Main

                ORG     03H                             ;0 INT0 interrupt
                RETI
                LJMP    F_INT0_Interrupt

                ORG     0BH                             ;1  Timer0 interrupt
                LJMP    F_Timer0_Interrupt

                ORG     13H                             ;2  INT1 interrupt
                LJMP    F_INT1_Interrupt

                ORG     1BH                             ;3  Timer1 interrupt
                LJMP    F_Timer1_Interrupt

                ORG     23H                             ;4  UART1 interrupt
                LJMP    F_UART1_Interrupt

                ORG     2BH                             ;5  ADC and SPI interrupt
```

STC MCU Limited.

```
                LJMP    F_ADC_Interrupt

                ORG     33H                             ;6  Low Voltage Detect interrupt
                LJMP    F_LVD_Interrupt

                ORG     3BH                             ;7  PCA interrupt
                LJMP    F_PCA_Interrupt

                ORG     43H                             ;8  UART2 interrupt
                LJMP    F_UART2_Interrupt

                ORG     4BH                             ;9  SPI interrupt
                LJMP    F_SPI_Interrupt

                ORG     53H                             ;10  INT2 interrupt
                LJMP    F_INT2_Interrupt

                ORG     5BH                             ;11  INT3 interrupt
                LJMP    F_INT3_Interrupt

                ORG     63H                             ;12  Timer2 interrupt
                LJMP    F_Timer2_Interrupt

                ORG     83H                             ;16  INT4 interrupt
                LJMP    F_INT4_Interrupt

;********************* Main Procedure **************************/
F_Main:

        MOV     R0, #1
L_ClearRamLoop:                                         ;ClearAM
        MOV     @R0, #0
        INC     R0
        MOV     A, R0
        CJNE    A, #0FFH, L_ClearRamLoop

        MOV     SP, #STACK_POIRTER
        MOV     PSW, #0
        USING   0                                       ;Choose Nun.0  R0~R7

;================= Initialize Procedure  ===================================
        MOV     R7, #50
```

STC MCU Limited.

```
        LCALL   F_delay_ms

        CLR     ET0                             ;
        CLR     TR0                             ;
        ORL     AUXR,  #080H                    ; Timer0 set as 1T mode
        ORL     AUXR2, #01H                     ; Enable output clock
        MOV     TMOD,  #0                       ; Timer0 set as Timer, 16 bits Auto Reload.
        MOV     TH0, #HIGH Timer0_Reload
        MOV     TL0, #LOW  Timer0_Reload        ;
        SETB    TR0

        LCALL   F_ADC_init
        MOV     R7, #50
        LCALL   F_delay_ms

        MOV     R0, #adc_prev                   ; Initialize the last value of ADC
L_Init_Loop1:
        MOV     @R0, #03H
        INC     R0
        MOV     @R0, #0FFH
        INC     R0
        MOV     A, R0
        CJNE    A, #(adc_prev + TOUCH_CHANNEL * 2), L_Init_Loop1

        MOV     R0, #TouchZero                  ; Initialize the ADC value of 0
L_Init_Loop2:
        MOV     @R0, #03H
        INC     R0
        MOV     @R0, #0FFH
        INC     R0
        MOV     A, R0
        CJNE    A, #(TouchZero + TOUCH_CHANNEL * 2), L_Init_Loop2

        MOV     R0, #TouchZeroCnt;
L_Init_Loop3:
        MOV     @R0, #0
        INC     R0
        MOV     A, R0
        CJNE    A, #(TouchZeroCnt + TOUCH_CHANNEL), L_Init_Loop3

        MOV     cnt_250ms, #5

;================== Main Loop  ================================
L_MainLoop:
```

STC MCU Limited.

```
        MOV     R7, #50                 ;Delay 50ms
        LCALL   F_delay_ms
        LCALL   F_ShowLED               ; Deal with the value indicating the touch action a time
        DJNZ    cnt_250ms, L_MainLoop

        MOV     cnt_250ms, #5           ;Dispose the function AutoZero() every 250m
        LCALL   F_AutoZero

        SJMP    L_MainLoop

;=================== End Main Procedure ==================================

; /*************  Initialize ADC *****************/
F_ADC_init:
        MOV     P1ASF,#0FFH             ;8 channels ADC
        MOV     ADC_CONTR,#080H         ;Enable ADC
        RET
; END OF ADC_init

; //========================================================================
; //Function: F_Get_ADC10bitResult
; // Description: Read ADC reslut by querying..
; // Parameter: R7: choose ADC to convert.
; // Return: R6 R7 == 10 bits ADC result.
; // Version: V1.0, 2014-3-25
; //========================================================================

F_Get_ADC10bitResult:
        USING   0                                                       ;Choose Nun.0 R0~R7

        MOV     ADC_RES, #0
        MOV     ADC_RESL,#0
        MOV     A, R7
        ORL     A, #0E8H        ;(0x80 OR ADC_90T OR ADC_START)         ;trigger ADC
        MOV     ADC_CONTR, A
        NOP
        NOP
        NOP
        NOP

L_10bitADC_Loop1:
        MOV     A, ADC_CONTR

        JNB     ACC.4, L_10bitADC_Loop1         ;Waiting for finishing converting of ADC
```

STC MCU Limited.

```
        MOV     ADC_CONTR,#080H                 //Clear flag
        MOV     A,ADC_RES
        MOV     B,#04H
        MUL     AB
        MOV     R7,A
        MOV     R6,B
        MOV     A, ADC_RESL
        ANL     A, #03H
        ORL     A,R7
        MOV     R7,A
        RET
; END OF _Get_ADC10bitResult

; /*********************  Track for the 0 automatically *************************/
F_AutoZero:                             ;Call the function every 250ms
        USING   0

        CLR     A
        MOV     R5,A
L_AutoZero_Loop:
                                ;[R6 R7] = adc[i],  (j = adc[i])
        MOV     A,R5
        ADD     A,ACC
        ADD     A,#LOW (adc)
        MOV     R0,A
        MOV     A,@R0
        MOV     R6,A
        INC     R0
        MOV     A,@R0
        MOV     R7,A

        ; to get the abs of difference value [R2 R3] = adc[i] - adc_prev[i],   (k = j - adc_prev[i];)
        //read one value before decrease
        MOV     A,R5
        ADD     A,ACC
        ADD     A,#LOW (adc_prev+01H)
        MOV     R0,A
        CLR     C
        MOV     A,R7
        SUBB    A,@R0
        MOV     R3,A
        MOV     A,R6
        DEC     R0
        SUBB    A,@R0
```

STC MCU Limited.

```
        MOV     R2,A

        ; to get the abs of difference value [R2 R3],  if(k & 0x8000)F0 = 1,    k = 0 - k;
        //release  to get the difference value of two sample
        CLR     F0                      ;Press
        JNB     ACC.7, L_AutoZero_1
        SETB    F0
        CLR             C
        CLR             A
        SUBB    A, R3
        MOV             R3, A
        MOV     A,R3
        CLR             A
        SUBB    A, R2
        MOV             R2, A

L_AutoZero_1:
        CLR     C                               ;Count [R2 R3] - #20,  if(k >= 20)       //the difference is large
        MOV     A,R3
        SUBB    A,#20
        MOV     A,R2
        SUBB    A,#00H
        JC      L_AutoZero_2    ;[R2 R3] , 20, jump

        MOV     A,#LOW (TouchZeroCnt)           ;If the difference is large，clear the counter
                                                ;TouchZeroCnt[i] = 0;
        ADD     A,R5
        MOV     R0,A
        MOV     @R0, #0

        ;       if(F0)     TouchZero[i] = j;            //If  release and the difference is large, replace directly
        JNB     F0,L_AutoZero_3
        MOV     A,R5
        ADD     A,ACC
        ADD     A,#LOW (TouchZero)
        MOV     R0,A
        MOV     @R0,AR6
        INC     R0
        MOV     @R0,AR7
        SJMP    L_AutoZero_3
L_AutoZero_2:   ;       if(++TouchZeroCnt[i] >= 20)
        MOV     A,#LOW (TouchZeroCnt)
        ADD     A,R5
        MOV     R0,A
```

STC MCU Limited.

```
        INC     @R0
        MOV     A,@R0
        CLR     C
        SUBB    A,#20
        JC      L_AutoZero_3        ;if(TouchZeroCnt[i] < 20), jump

        MOV     @R0, #0             ;TouchZeroCnt[i] = 0;

        MOV     A,R5                ;TouchZero[i] = adc_prev[i];
        ADD     A,ACC
        ADD     A,#LOW (adc_prev)
        MOV     R0,A
        MOV     A,@R0
        MOV     R2,A
        INC     R0
        MOV     A,@R0
        MOV     R3,A
        MOV     A,R5
        ADD     A,ACC
        ADD     A,#LOW (TouchZero)
        MOV     R0,A
        MOV     @R0,AR2
        INC     R0
        MOV     @R0,AR3

L_AutoZero_3:
                ;       Save the sample value       adc_prev[i] = j;
        MOV     A,R5
        ADD     A,ACC
        ADD     A,#LOW (adc_prev)
        MOV     R0,A
        MOV     @R0,AR6
        INC     R0
        MOV     @R0,AR7

        INC     R5
        MOV     A,R5
        XRL     A,#08H
        JZ      $ + 5H
        LJMP    L_AutoZero_Loop

        RET

; END OF AutoZero
```

STC MCU Limited.

```
; /********************** Get the touch action , this function is called every 50ms ********************/
F_check_adc:                    ;Get the value of ADC to translate the
                                ;press action, increase the value of ADC
        USING   0

        MOV     R4, AR7
;       adc[index] = 1023 - Get_ADC10bitResult(index);          ;Get the value of ADC to translate the
                                                                ;press action, increase the value of ADC
        LCALL   F_Get_ADC10bitResult    ;return the ADC value to [R6 R7]
        CLR     C
        MOV     A,#0FFH         ;1023 - [R6 R7]
        SUBB    A,R7
        MOV     R7,A
        MOV     A,#03H
        SUBB    A,R6
        MOV     R6,A

        MOV     A,R4            ;save adc[index]
        ADD     A,ACC
        ADD     A,#LOW (adc)
        MOV     R0,A
        MOV     @R0,AR6
        INC     R0
        MOV     @R0,AR7

;       if(adc[index] < TouchZero[index])       return  0;      //If the ADC value is smaller than 0,
                                                        //release action will be regarded as happening
        MOV     A,R4
        ADD     A,ACC
        ADD     A,#LOW (TouchZero+01H)
        MOV     R1,A
        MOV     A,R4
        ADD     A,ACC
        ADD     A,#LOW (adc)
        MOV     R0,A
        MOV     A,@R0
        MOV     R6,A
        INC     R0
        MOV     A,@R0
        CLR     C
        SUBB    A,@R1           ;Count adc[index] - TouchZero[index]
        MOV     A,R6
        DEC     R1
        SUBB    A,@R1
```

STC MCU Limited.

```
        JNC     L_check_adc_1   ;if(adc[index] >= TouchZero[index]), Jump
        MOV     R7,#00H         ;if(adc[index] < TouchZero[index]),   the ADC value is smaller than 0,
                                ;release action will be regarded as happening, return 0
        RET

L_check_adc_1:
                                                        ; to get the difference value
                                                        ;[R6 R7] = delta = adc[index] - TouchZero[index];
        MOV     A,R4
        ADD     A,ACC
        ADD     A,#LOW (TouchZero+01H)
        MOV     R1,A
        MOV     A,R4
        ADD     A,ACC
        ADD     A,#LOW (adc+01H)
        MOV     R0,A
        CLR     C
        MOV     A,@R0
        SUBB    A,@R1
        MOV     R7,A
        DEC     R0
        MOV     A,@R0
        DEC     R1
        SUBB    A,@R1
        MOV     R6,A

                                ;---- Variable 'delta' assigned to Register 'R6/R7' ----
        CLR     C
        MOV     A,R7
        SUBB    A,#40
        MOV     A,R6
        SUBB    A,#00H
        JC      L_check_adc_2   ;if(delta < 40), Jump
        MOV     R7,#1           ;if(delta >= 40)      return 1;           //Press, return 1
        RET

L_check_adc_2:
        SETB    C
        MOV     A,R7
        SUBB    A,#20
        MOV     A,R6
        SUBB    A,#00H
        JNC     L_check_adc_3
        MOV     R7,#0           ;if(delta <= 20)      return 0;           //Release, return 0
```

STC MCU Limited.

```
        RET
L_check_adc_3:
        MOV     R7,#2           ;if((delta > 20) && (delta < 40))       Hold on , return 2
        RET
; END OF _check_adc

/********************* Deal with the  touch action, this function is called every 50ms *****************/
F_ShowLED:
        USING   0

        MOV     R7, #0
        LCALL   F_check_adc
        MOV     A,R7
        ANL     A, #0FEH
        JNZ     L_QuitCheck0
        MOV     A, R7
        MOV     C, ACC.0
        CPL     C
        MOV     P_LED0, C       ;if(i == 0), LED indicator is off , if(i == 1), LED indicator is on
L_QuitCheck0:

        MOV     R7, #1
        LCALL   F_check_adc
        MOV     A,R7
        ANL     A, #0FEH
        JNZ     L_QuitCheck1
        MOV     A, R7
        MOV     C, ACC.0
        CPL     C
        MOV     P_LED1, C       ;if(i == 0), LED indicator is off , if(i == 1), LED indicator is on
L_QuitCheck1:

        MOV     R7, #2
        LCALL   F_check_adc
        MOV     A,R7
        ANL     A, #0FEH
        JNZ     L_QuitCheck2
        MOV     A, R7
        MOV     C, ACC.0
        CPL     C
        MOV     P_LED2, C       ;if(i == 0), LED indicator is off , if(i == 1), LED indicator is on
L_QuitCheck2:

        MOV     R7, #3
        LCALL   F_check_adc
```

STC MCU Limited.

```
        MOV     A,R7
        ANL     A, #0FEH
        JNZ     L_QuitCheck3
        MOV     A, R7
        MOV     C, ACC.0
        CPL     C
        MOV     P_LED3, C       ;;if(i == 0), LED indicator is off , if(i == 1), LED indicator is on
L_QuitCheck3:

        MOV     R7, #4
        LCALL   F_check_adc
        MOV     A,R7
        ANL     A, #0FEH
        JNZ     L_QuitCheck4
        MOV     A, R7
        MOV     C, ACC.0
        CPL     C
        MOV     P_LED4, C       ;;if(i == 0), LED indicator is off , if(i == 1), LED indicator is on
L_QuitCheck4:

        MOV     R7, #5
        LCALL   F_check_adc
        MOV     A,R7
        ANL     A, #0FEH
        JNZ     L_QuitCheck5
        MOV     A, R7
        MOV     C, ACC.0
        CPL     C
        MOV     P_LED5, C       ;;if(i == 0), LED indicator is off , if(i == 1), LED indicator is on
L_QuitCheck5:

        MOV     R7, #6
        LCALL   F_check_adc
        MOV     A,R7
        ANL     A, #0FEH
        JNZ     L_QuitCheck6
        MOV     A, R7
        MOV     C, ACC.0
        CPL     C
        MOV     P_LED6, C       ;if(i == 0), LED indicator is off , if(i == 1), LED indicator is on
L_QuitCheck6:

        MOV     R7, #7
        LCALL   F_check_adc
```

STC MCU Limited.

```
        MOV     A,R7
        ANL     A, #0FEH
        JNZ     L_QuitCheck7
        MOV     A, R7
        MOV     C, ACC.0
        CPL     C
        MOV     P_LED7, C       ;if(i == 0), LED indicator is off , if(i == 1), LED indicator is on
L_QuitCheck7:

        RET
; END OF ShowLED

;//========================================================================
;// Function: F_delay_ms
;// Description: Delay function。
;// Parameter: R7: delay time.
;// Return: none.
;// Version: VER1.0
;// Date: 2013-4-1
;// Remark: Except ACCC and PSW, all common registers must be pushed
;//========================================================================
F_delay_ms:
        PUSH    AR3                     ;Push R3
        PUSH    AR4                     ;Push R4

L_delay_ms_1:
        MOV     R3, #HIGH (Fosc_KHZ / 13)
        MOV     R4, #LOW (Fosc_KHZ / 13)

L_delay_ms_2:
        MOV     A, R4                   ;1T             Total 13T/loop
        DEC     R4                      ;2T
        JNZ     L_delay_ms_3            ;4T
        DEC     R3
L_delay_ms_3:
        DEC     A                       ;1T
        ORL     A, R3                   ;1T
        JNZ     L_delay_ms_2            ;4T

        DJNZ    R7, L_delay_ms_1

        POP     AR4             ;Pop R2
        POP     AR3             ;Pop R3
        RET
```

STC MCU Limited.

```
;*******************************************************************
;***************** Interrupt Function ********************************************************
F_Timer0_Interrupt:
        RETI

F_Timer1_Interrupt:
        RETI

F_Timer2_Interrupt:
        RETI

F_INT0_Interrupt:
        RETI

F_INT1_Interrupt:
        RETI

F_INT2_Interrupt:
        RETI

F_INT3_Interrupt:
        RETI

F_INT4_Interrupt:
        RETI

F_UART1_Interrupt:
        RETI

F_UART2_Interrupt:
        RETI

F_ADC_Interrupt:
        RETI

F_LVD_Interrupt:
        RETI

F_PCA_Interrupt:
        RETI

F_SPI_Interrupt:
        RETI

        END
```

STC MCU Limited.

Chapter 15 Sysnchronous Serial Peripheral Interface

STC15 series MCU also provides another high-speed serial communication interface, the SPI interface. SPI is a full-duplex, high-speed, synchronous communication bus with two operation modes: Master mode and Slave mode.

Up to 3Mbit/s can be supported in either Master or Slave mode under the SYSclk=12MHz. Two status flags are provided to signal the transfer completion and write-collision occurrence.

The special peripheral function of STC15 series MCU are summarized as shown in the following table.

Special peripheral Functiom / Type MCU	8-Channel 10-bit high-speed A/D Converter	CCP/PCA/PWM Function	a group of high-speed synchronous serial peripheral interface ----SPI
STC15W4K32S4 series	√	√	√
STC15F2K60S2 series	√	√	√
STC15W1K16S series			√
STC15W404S series			√
STC15W401AS series	√	√	√
STC15W201S series			
STC15F408AD series	√	√	√
STC15W10x series			
STC15F101W series			

STC MCU Limited.

√ means the corresponding series MCU have the corresponding peripheral function

For STC15W4K32S4, STC15F2K60S2, STC15W1K16S and STC15W404S series MCU, thier SPI all can be switched in 3 groups of pins :

[SS/P1.2, MOSI/P1.3, MISO/P1.4, SCLK/P1.5];
[SS_2/P2.4, MOSI_2/P2.3, MISO_2/P2.2, SCLK_2/P2.1];
[SS_3/P5.4, MOSI_3/P4.0, MISO_3/P4.1, SCLK_3/P4.3]

For STC15F408AD and STC15W401AS series MCU, thier SPI can be switched in 2 groups of pins :

[SS/P1.2, MOSI/P1.3, MISO/P1.4, SCLK/P1.5];
[SS_2/P2.4, MOSI_2/P2.3, MISO_2/P2.2, SCLK_2/P2.1].

STC15W201S, STC15W10x and STC15F/L101W series MCU have no SPI function.

15.1 Special Function Registers related with SPI

SPI Management SFRs

Mnemonic	Description	Address	Bit address and Symbol								Reset Value
			B7	B6	B5	B4	B3	B2	B1	B0	
SPCTL	SPI Control Register	CEH	SSIG	SPEN	DORD	MSTR	CPOL	CPHA	SPR1	SPR0	0000,0100
SPSTAT	SPI Status Register	CDH	SPIF	WCOL	-	-	-	-	-	-	00xx,xxxx
SPDAT	SPI Data Register	CFH									0000,0000
AUXR1 P_SW1	Auxiliary Register 1	A2H	S1_S1	S1_S0	CCP_S1	CCP_S0	SPI_S1	SPI_S0	-	DPS	0100,0000

1. SPI Control register: SPCTL (Non bit-addressable)

SFR name	Address	bit	B7	B6	B5	B4	B3	B2	B1	B0
SPCTL	CEH	name	SSIG	SPEN	DORD	MSTR	CPOL	CPHA	SPR1	SPR0

SSIG : Control whether SS pin is ignored or not.
If SSIG=1, MSTR(SPCTL.4) decides whether the device is a master or slave.
If SSIG=0, the SS pin decides whether the device is a master or slave. SS pin can be used as I/O port.

SPEN : SPI enable bit.
If SPEN=0, the SPI interface is disabled and all SPI pins will be general-purpose I/O ports.
If SPEN=1, the SPI is enabled.

DORD : Set the transmitted or received SPI data order.
If DORD=1, The LSB of the data word is transmitted first.
If DORD=0, The MSB of the data word is transmitted first.

MSTR : Master/Slave mode select bit.
If MSTR=0, set the SPI to play as Slave part.
If MSTR=1, set the SPI to play as Master part.

CPOL : SPI clock polarity select bit.
If CPOL=1, SPICLK is high level when in idle mode. The leading edge of SPICLK is the falling edge and the trailing edge is the rising edge.
If CPOL=0, SPICLK is low when idle. The leading edge of SPICLK is the rising edge and the trailing edge is the falling edge.

CPHA : SPI clock phase select bit.
If CPHA=1, Data is driven on the leading edge of SPICLK, and is sampled on the trailing edge.
If CPHA=0, Data is driven when SS pin is low (SSIG=0) and changes on the trailing edge of SPICLK. Data is sampled on the leading edge of SPICLK. (Note : If SSIG=1, CPHA must not be 0, otherwise the operation is undefined)

STC MCU Limited

SPR1-SPR0 : SPI clock rate select bit (when in master mode)

SPI clock frequency select bit

SPR1	SPR0	SPI clock (SCLK)
0	0	CPU_CLK/4
0	1	CPU_CLK/16
1	0	CPU_CLK/64
1	1	CPU_CLK/128

CPU_CLK is CPU clock.

When CPHA equals 0, SSIG must be 0 and SS pin must be negated and reasserted between each successive serial byte transfer. If the SPDAT register is written while SS is active(0), a write collision error results and WCOL is set.

When CPHA equals 1, SSIG may be 0 or 1. If SSIG=0, the SS pin may remain active low between successive transfers(can be tied low at any times). This format is sometimes preferred for use in systems having a signle fixed master and a single slave configuration.

STC MCU Limited.

2. SPI State register: SPSTAT (Non bit-addressable)

SFR name	Address	bit	B7	B6	B5	B4	B3	B2	B1	B0
SPSTAT	CDH	name	SPIF	WCOL	-	-	-	-	-	-

SPIF : SPI transfer completion flag.
When a serial transfer finishes, the SPIF bit is set and an interrupt is generated if both the ESPI (IE.6) bit and the EA (IE.7) bit are set. If SS is an input and is driven low when SPI is in master mode with SSIG = 0, SPIF will also be set to signal the “mode change”.The SPIF is cleared in software by “writing 1 to this bit”.

WCOL : SPI write collision flag.
The WCOL bit is set if the SPI data register, SPDAT, is written during a data transfer. The WCOL flag is cleared in software by “writing 1 to this bit”.

3. SPI Data register : SPDAT (Non bit-addressable)

SFR name	Address	bit	B7	B6	B5	B4	B3	B2	B1	B0
SPDAT	CFH	name								

The SFR SPDAT holds the data to be transmitted or the data received.

4. SPI Switch Control bits: SPI_S1 / P_SW1.7 and SPI_S0 / P_SW1.6

AUXR1 / P_SW1 : Peripheral function switch register (Non bit-addressable)

Mnemonic	Address	Name	7	6	5	4	3	2	1	0	Reset Value
AUXR1 P_SW1	A2H	Auxiliary register 1	S1_S1	S1_S0	CCP_S1	CCP_S0	SPI_S1	SPI_S0	0	DPS	0100,0000

SPI can be switched in 3 groups of pins by selecting the control bits SPI_S1 and SPI_S0		
SPI_S1	SPI_S0	SPI can be switched in P1 and P2 and P4
0	0	SPI on [P1.2/SS,P1.3/MOSI,P1.4/MISO,P1.5/SCLK]
0	1	SPI on [P2.4/SS_2,P2.3/MOSI_2,P2.2/MISO_2,P2.1/SCLK_2]
1	0	SPI on [P5.4/SS_3,P4.0/MOSI_3,P4.1/MISO_3,P4.3/SCLK_3]
1	1	Invalid

CCP can be switched in 3 groups of pins by selecting the control bits CCP_S1 and CCP_S0.		
CCP_S1	CCP_S0	CCP can be switched in P1 and P2 and P3
0	0	CCP on [P1.2/ECI,P1.1/CCP0,P1.0/CCP1,P3.7/CCP2]
0	1	CCP on [P3.4/ECI_2,P3.5/CCP0_2,P3.6/CCP1_2,P3.7/CCP2_2]
1	0	CCP on [P2.4/ECI_3,P2.5/CCP0_3,P2.6/CCP1_3,P2.7/CCP2_3]
1	1	Invalid

UART1/S1 can be switched in 3 groups of pins by selecting the control bits S1_S0 and S1_S1.		
S1_S1	S1_S0	UART1/S1 can be switched between P1 and P3
0	0	UART1/S1 on [P3.0/RxD,P3.1/TxD]
0	1	UART1/S1 on [P3.6/RxD_2,P3.7/TxD_2]
1	0	UART1/S1 on [P1.6/RxD_3/XTAL2,P1.7/TxD_3/XTAL1] when UART1 is on P1, please using internal R/C clock.
1	1	Invalid

Recommed UART1 on [P3.6/RxD_2,P3.7/TxD_2] or [P1.6/RxD_3/XTAL2,P1.7/TxD_3/XTAL1].

DPS： DPTR registers select bit.

0: DPTR0 is selected

1: DPTR1 is selected

STC MCU Limited.

5. Registers bits related with SPI Interrupt : EA, ESPI and PSPI

IE2: Interrupt Enable 2 Rsgister (Non bit-addressable)

SFR name	Address	bit	B7	B6	B5	B4	B3	B2	B1	B0
IE2	AFH	name	-	ET4	ET3	ES4	ES3	ET2	ESPI	ES2

ESPI : SPI interrupt enable bit.

If ESPI = 0, SPI interrupt would be diabled.

If ESPI = 1, SPI interrupt would be enabled.

IE: Interrupt Enable Rsgister (Bit-addressable)

SFR name	Address	bit	B7	B6	B5	B4	B3	B2	B1	B0
IE	A8H	name	EA	ELVD	EADC	ES	ET1	EX1	ET0	EX0

EA : disables all interrupts.

If EA = 0,no interrupt will be acknowledged.

If EA = 1, each interrupt source is individually enabled or disabled by setting or clearing its enable bit.

IP2: Interrupt Priority Register (Non bit-addressable)

SFR name	Address	bit	B7	B6	B5	B4	B3	B2	B1	B0
IP2	B5H	name	-	-	-	-	-	-	PSPI	PS2

PSPI : SPI interrupt priority control bit.

if PSPI=0, SPI interrupt is assigned lowest priority (priority 0).

if PSPI=1, SPI interrupt is assigned highest priority (priority 1).

STC MCU Limited.

15.2 SPI Structure

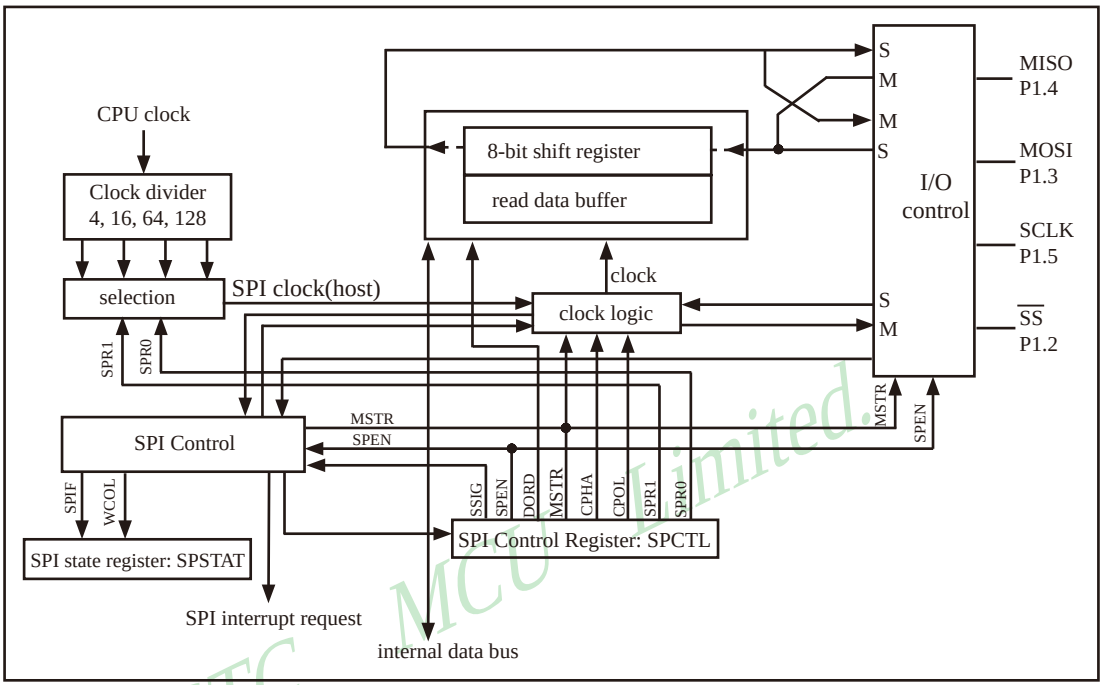

SPI block diagram

The SPI interface has three pins implementing the SPI functionality: SCLK(P1.5), MISO(P1.4), MOSI(P1.3). An extra pin SS(P1.2) is designed to configure the SPI to run under Master or Slave mode. SCLK, MOSI and MISO are typically tied together between two or more SPI devices. Data flows from master to slave on MOSI(Master Out Slave In) pin and flows from slave to master on MISO(Master In Slave Out) pin. The SCLK signal is output in the master mode and is input in the slave mode. If the SPI system is disabled, i.e, SPEN(SPCTL.6)=0, these pins are configured as general-purposed I/O port(P1.2 ~ P1.5).

SS is thel slave select pin. In a typical configuration, an SPI master asserts one of its port pins to select one SPI device as the current slave. An SPI slave device uses its SS pin to determine whether it is selected. But if SPEN=0 or SSIG(SPCTL.7) bit is 1, the SS pin is ignored. Note that even if the SPI is configured as a master(MSTR/ SPCTL.4=1), it can still be converted to a slave by driving the SS pin low. When the conversion happened, the SPIF bit(SPSTAT.7) will be set.

Two devices with SPI interface communicate with each other via one synchronous clock signal, one input data signal, and one output data signal. There are two concerns the user should take care, one of them is latching data on the negative edge or positive edge of the clock signal which named polarity, the other is keeping the clock signal low or high while the device idle which named phase. Permuting those states from polarity and phase, there could be four modes formed, they are SPI-MODE-0, SPI-MODE-1, SPI-MODE-2, SPI-MODE-3. Many device declares that they meet SPI machanism, but few of them are adaptive to all four modes. The STC15F2K60S2 series are flexible to be configured to communicate to another device with MODE-0, MODE-1, MODE-2 or MODE-3 SPI, and play part of Master and Slave.

STC MCU Limited.

15.3 SPI Data Communication

There are four SPI pins: SCLK, MISO, MOSI and $\overline{SS}$ which can be switched in 3 groups of pins: [SCLK/P1.5, MISO/P1.4, MOSI/P1.3, $\overline{SS}$/P1.2]; [SCLK_2/P2.1, MISO_2/P2.2, MOSI_2/P2.3, $\overline{SS}$_2/P2.4]; [SCLK_3/P4.3, MISO_3/P4.1, MOSI_3/P4.0, $\overline{SS}$_3/P5.4].

MOSI (Master Out Slave In) is directly connected between the Master Device and a Slave Device. The MOSI line is used to transfer data in series from the Master to the Slave. Therefore, it is an output signal from the Master, and an input signal to a Slave. A Byte (8-bit word) is transmitted most significant bit (MSB) first, least significant bit (LSB) last.

MISO (Master In Slave Out) is also directly connected between the Slave Device and a Master Device. The MISO line is used to transfer data in series from the Slave to the Master. Therefore, it is an output signal from the Slave, and an input signal to the Master. A Byte (8-bit word) is transmitted most significant bit (MSB) first, least significant bit (LSB) last.

SCLK (SPI Serial Clock) is used to synchronize the data transmission both in and out of the devices through their MOSI and MISO lines. It is driven by the Master for eight clock cycles which allows to exchange one Byte on the serial lines.

SCLK, MOSI and MISO are typically tied together between two or more SPI devices. Data flows from master to slave on the MOSI pin (Master Out / Slave In) and flows from slave to master on the MISO pin (Master In / Slave Out). The SPICLK signal is output in the master mode and is input in the slave mode. If the SPI system is disabled, i.e., SPEN (SPCTL.6) = 0, these pins function as normal I/O pins.

$\overline{SS}$ is the optional slave select pin. This signal must stay low for any message for a Slave. It is obvious that only one Master ($\overline{SS}$ high level) can drive the network. In a typical configuration, an SPI master asserts one of its port pins to select one SPI device as the current slave.

An SPI slave device uses its /SS pin to determine whether it is selected. The $\overline{SS}$ is ignored if any of the following conditions are true:

- If the SPI system is disabled, i.e. SPEN (SPCTL.6) = 0 (reset value).
- If the SPI is configured as a master, i.e., MSTR (SPCTL.4) = 1, and P1.2 ($\overline{SS}$) is configured as an output.
- If the /SS pin is ignored, i.e. SSIG (SPCTL.7) bit = 1, this pin is configured for port functions.

Note that even if the SPI is configured as a master (MSTR=1), it can still be converted to a slave by driving the $\overline{SS}$ pin low (if SSIG=0 and P1.2/$\overline{SS}$ is set to input). Should this happen, the SPIF bit (SPSTAT.7) will be set.

STC MCU Limited.

15.3.1 SPI Data Communication Modes

There are three modes of SPI data communication : single master — single slave, dual devices configuration (both can be a master or slave) and single master — multiple slaves.

For the master: any port pin, including P1.2 ($\overline{SS}$), can be used to drive the /SS pin of the slave.
For the slave: SSIG is '0', and /SS pin is used to determine whether it is selected

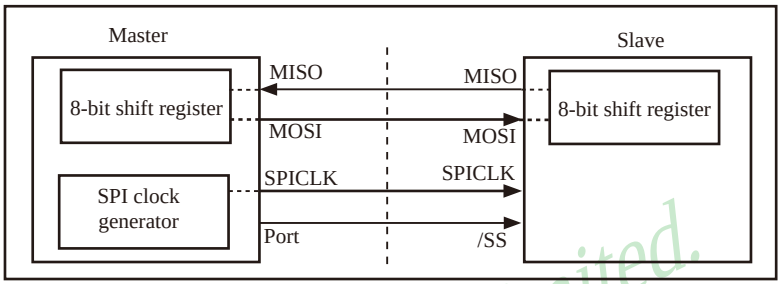

SPI single master — single slave configuration

STC MCU Limited.

Two devices are connected to each other and either device can be a master or a slave. When no SPI operation is occurring, both can be configured as masters with MSTR=1, SSIG=0 and P1.2 ($\overline{SS}$) configured in quasi-bidirectional mode. When any device initiates a transfer, it can configure P1.2 as an output and drive it low to force a "mode change to slave" in the other device.

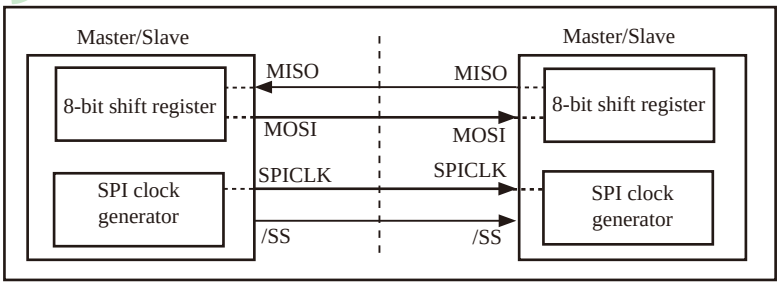

SPI dual device configuration, both can be a master or slave

For the master: any port pin, including P1.2 ($\overline{SS}$), can be used to drive the /SS pins of the slaves.
For all the slaves: SSIG is '0', and /SS pin are used to determine whether it is selected

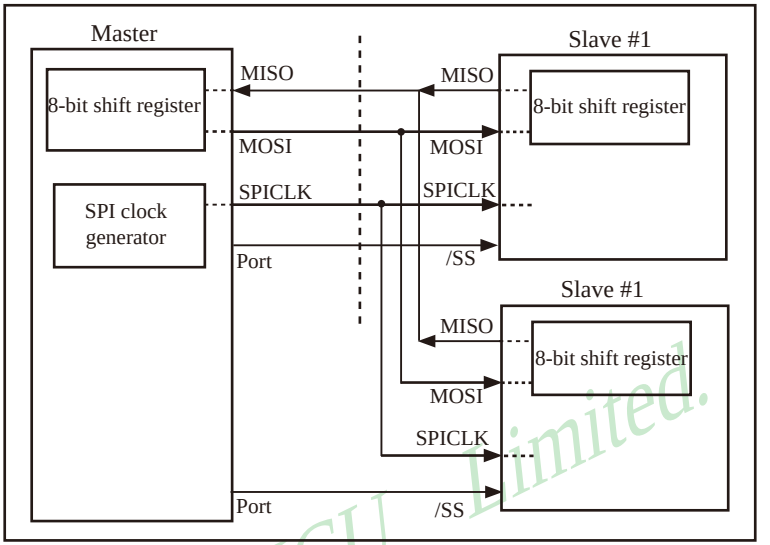

SPI single master multiple slaves configuration

In SPI, transfers are always initiated by the master. If the SPI is enabled (SPEN=1) and selected as master, any instruction that use SPI data register SPDAT as the destination will starts the SPI clock generator and a data transfer. The data will start to appear on MOSI about one half SPI bit-time to one SPI bit-time after it. Before starting the transfer, the master may select a slave by driving the SS pin of the corresponding device low. Data written to the SPDAT register of the master shifted out of MOSI pin of the master to the MOSI pin of the slave. And at the same time the data in SPDAT register of the selected slave is shifted out of MISO pin to the MISO pin of the master. During one byte transfer, data in the master and in the slave is interchanged. After shifting one byte, the transfer completion flag(SPIF) is set and an interrupt will be created if the SPI interrupt is enabled.

If SPEN=1, SSIG=0, SS pin=1 and MSTR=1, the SPI is enabled in master mode. Before the instruction that use SPDAT as the destination register, the master is in idle state and can be selected as slave device by any other master drives the idle master SS pin low. Once this happened, MSTR bit of the idle master is cleared by hardware and changes its state a selected slave. User software should always check the MSTR bit. If this bit is cleared by the mode change of SS pin and the user wants to continue to use the SPI as a master later, the user must set the MSTR bit again, otherwise it will always stay in slave mode.

The SPI is single buffered in transmit direction and double buffered in receive direction. New data for transmission can not be written to the shift register until the previous transaction is complete. The WCOL bit is set to signal data collision when the data register is written during transaction. In this case, the data currently being transmitted will continue to be transmitted, but the new data which causing the collision will be lost. For receiving data, received data is transferred into a internal parallel read data buffer so that the shift register is free to accept a second byte. However, the received byte must be read from the data register(SPDAT) before the next byte has been completely transferred. Otherwise the previous byte is lost. WCOL can be cleared in software by "writing 1 to the bit".

STC MCU Limited.

15.3.2 SPI Configuration

When SPI data communication, SPEN, SSIG, $\overline{SS}$(P1.2) and MSTR jointly control the selection of master and slave.

SPEN	SSIG	$\overline{SS}$ pin P1.2	MSTR	Mode	MISO P1.4	MOSI P1.3	SCLK P1.5	Remark
0	X	P1.2/ $\overline{SS}$	X	SPI disabled	P1.4/ MISO	P1.3/ MOSI	P1.5/ SCLK	SPI is disabled, P1.2/$\overline{SS}$, P1.3/ MOSI, P1.4/MISO and P1.5/SCLK are used as general I/O ports
1	0	0	0	Selected salve	output	input	input	Selected as slave
1	0	1	0	Unselected slave	Hi-Z	input	inpur	Not selected.
1	0	0	1—>0	slave (by mode change)	output	input	input	Mode change to slave if P1.2/$\overline{SS}$ pin is driven low, and MSTR will be cleared to '0' by H/W automatically.
1	0	1	1	Master (idle)	input	Hi-Z	Hi-Z	MOSI and SCLK are at high impedance to avoid bus contention when the Master is idle.
				Master (active)		output	output	MOSI and SCLK are push-pull when the Master is active.
1	1	P1.2/ $\overline{SS}$	0	Slave	output	input	input	
1	1	P1.2/ $\overline{SS}$	1	Master	input	output	output	

"X" means "don't care"

STC MCU Limited.

15.3.3 Additional Considerations for a Slave

When CPHA is 0, SSIG must be 0 and $\overline{SS}$ pin must be negated and reasserted between each successive serial byte transfer. Note the SPDAT register cannot be written while $\overline{SS}$ pin is active (low), and the operation is undefined if CPHA is 0 and SSIG is 1.

When CPHA is 1, SSIG may be 0 or 1. If SSIG=0, the $\overline{SS}$ pin may remain active low between successive transfers (can be tied low at all times). This format is sometimes preferred for use in systems having a single fixed master and a single slave configuration.

15.3.4 Additional Considerations for a Master

In SPI, transfers are always initiated by the master. If the SPI is enabled (SPEN=1) and selected as master, writing to the SPI data register (SPDAT) by the master starts the SPI clock generator and data transfer. The data will start to appear on MOSI about one half SPI bit-time to one SPI bit-time after data is written to SPDAT.

Before starting the transfer, the master may select a slave by driving the $\overline{SS}$ pin of the corresponding device low. Data written to the SPDAT register of the master is shifted out of MOSI pin of the master to the MOSI pin of the slave. And, at the same time the data in SPDAT register of the selected slave is shifted out on MISO pin to the MISO pin of the master.

After shifting one byte, the SPI clock generator stops, setting the transfer completion flag (SPIF) and an interrupt will be created if the SPI interrupt is enabled. The two shift registers in the master CPU and slave CPU can be considered as one distributed 16-bit circular shift register. When data is shifted from the master to the slave, data is also shifted in the opposite direction simultaneously. This means that during one shift cycle, data in the master and the slave are interchanged.

15.3.5 Mode Change on $\overline{SS}$-pin

If SPEN=1, SSIG=0, MSTR=1 and $\overline{SS}$ pin=1, the SPI is enabled in master mode. In this case, another master can drive this pin low to select this device as an SPI slave and start sending data to it. To avoid bus contention, the SPI becomes a slave. As a result of the SPI becoming a slave, the MOSI and SCLK pins are forced to be an input and MISO becomes an output. The SPIF flag in SPSTAT is set, and if the SPI interrupt is enabled, an SPI interrupt will occur. User software should always check the MSTR bit. If this bit is cleared by a slave select and the user wants to continue to use the SPI as a master, the user must set the MSTR bit again, otherwise it will stay in slave mode.

STC MCU Limited.

15.3.6 Write Collision

The SPI is single buffered in the transmit direction and double buffered in the receive direction. New data for transmission can not be written to the shift register until the previous transaction is complete. The WCOL (SPSTAT.6) bit is set to indicate data collision when the data register is written during transmission. In this case, the data currently being transmitted will continue to be transmitted, but the new data, i.e., the one causing the collision, will be lost.

While write collision is detected for both a master or a slave, it is uncommon for a master because the master has full control of the transfer in progress. The slave, however, has no control over when the master will initiate a transfer and therefore collision can occur.

For receiving data, received data is transferred into a parallel read data buffer so that the shift register is free to accept a second character. However, the received character must be read from the Data Register (SPDAT) before the next character has been completely shifted in. Otherwise, the previous data is lost.

WCOL can be cleared in software by writing '1' to the bit.

STC MCU Limited.

15.3.7 SPI Clock Rate Select

The SPI clock rate selection (in master mode) uses the SPR1 and SPR0 bits in the SPCTL register, as shown in following Table.

SPI Serial Clock Rates

SPR1	SPR0	SPI Clock Rate @ SYSclk = 12MHz	SYSclk divided by
0	0	3 MHz	4
0	1	750 KHz	16
1	0	187.5 KHz	64
1	1	93.75 KHz	128
Where, SYSclk is the system clock			

15.3.8 SPI Data Mode

CPHA/SPCTL.2 is SPI clock phase select bit which is used to setting the clock edge of Data sample and change. CPOL/SPCTL.3 is used to select SPI clock polarity.

The following are some typical timing diagrams which depend on the value of CPHA/SPCTL.2

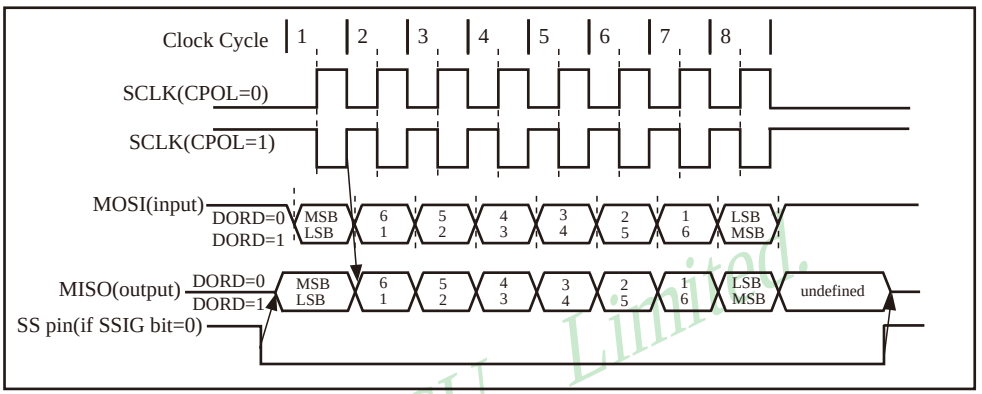

SPI slave transfer format with CPHA=0

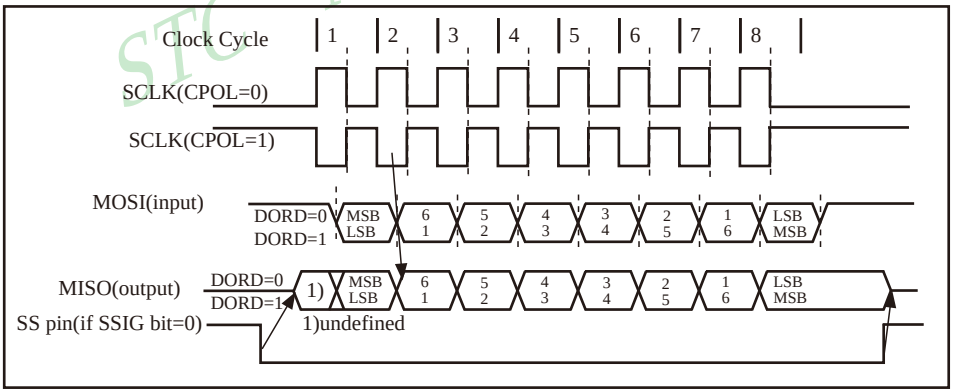

SPI slave transfer format with CPHA=1

STC MCU Limited.

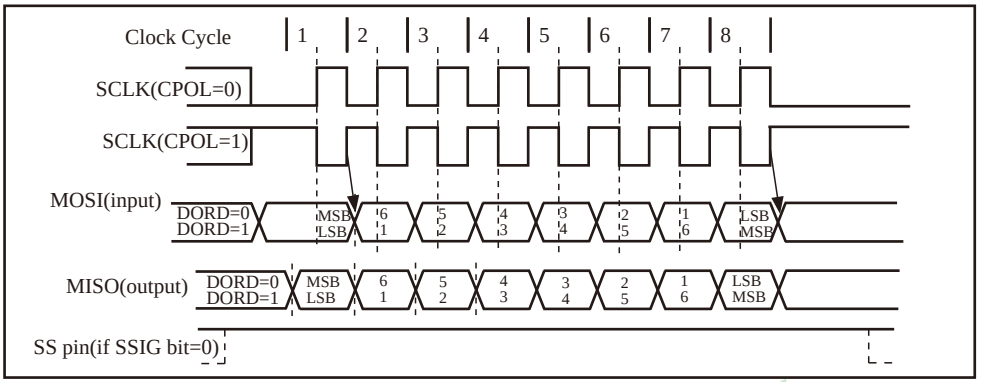

SPI master transfer format with CPHA=0

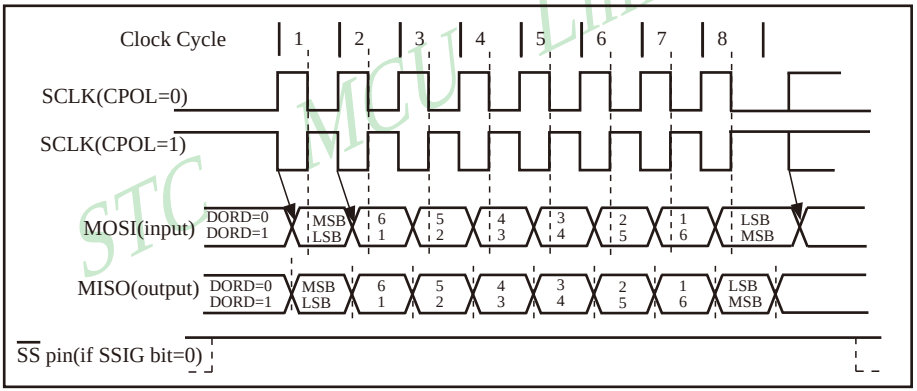

SPI master transfer format with CPHA=1

** The function of SPI can be redirected from P1[2:5] to P2[1:4] pin by setting SPI_S1 and SPI_S0 bits in AUXR1/P_SW1 register.*

15.4 SPI Function Demo Program(Single Master—Single Slave)

15.4.1 SPI Function Demo Program using Interrupt(C and ASM)

The following program,written in C language and assembly language, tests SPI function and applys to SPI single master single slave configuration.

1. C code listing:

```
;/*---------------------------------------------------------------------------------------------------*/
;/* --- STC MCU International Limited ---------------------------------------------------------------*/
;/* --- STC 1T Series MCU SPI Demo (1 master and 1 slave) -------------------------------------------*/
/* --- Mobile: (86)13922805190 ---------------------------------------------------------------*/
/* --- Fax: 86-755-82905966 ---------------------------------------------------------------*/
/* --- Tel: 86-755-82948412 ---------------------------------------------------------------*/
/* --- Web: www.STCMCU.com ---------------------------------------------------------------*/
/* If you want to use the program or the program referenced in the ---------------------------*/
/* article, please specify in which data and procedures from STC ---------------------------*/
/*---- In Keil C development environment, select the Intel 8052 to compiling ----------*/
/*----  And only contain < reg51.h > as header file ----------*/
/*---------------------------------------------------------------------------------------------------*/


//suppose the frequency of test chip is 18.432MHz

#include "reg51.h"

#define   MASTER                                  //define:master undefine:slave
#define   FOSC    18432000L
#define   BAUD    (256 - FOSC / 32 / 115200)

typedef   unsigned char     BYTE;
typedef   unsigned int      WORD;
typedef   unsigned long     DWORD;

sfr       AUXR    =   0x8e;                     //Auxiliary register

sfr       SPSTAT  =   0xcd;                     //SPI status register
#define   SPIF    0x80                          //SPSTAT.7
#define   WCOL    0x40                          //SPSTAT.6
sfr       SPCTL   =   0xce;                     //SPI control register
#define   SSIG    0x80                          //SPCTL.7
#define   SPEN    0x40                          //SPCTL.6
#define   DORD    0x20                          //SPCTL.5
#define   MSTR    0x10                          //SPCTL.4
#define   CPOL    0x08                          //SPCTL.3
#define   CPHA    0x04                          //SPCTL.2
#define   SPDHH   0x00                          //CPU_CLK/4
#define   SPDH    0x01                          //CPU_CLK/16
```

STC MCU Limited.

```
#define   SPDL    0x02                    //CPU_CLK/64
#define   SPDLL   0x03                    //CPU_CLK/128
sfr       SPDAT   =       0xcf;           //SPI data register
sbit      SPISS   =       P1^3;           //SPI slave select, connect to slave' SS(P1.2) pin
sfr       IE2     =       0xAF;           //interrupt enable rgister 2

#define   ESPI    0x02                    //IE2.1

void InitUart();
void InitSPI();
void SendUart(BYTE dat);                  //send data to PC
BYTE RecvUart();                          //receive data from PC

//////////////////////////////////////////////////////////
void main()
{
        InitUart();                       //initial UART
        InitSPI();                        //initial SPI
        IE2 |= ESPI;
        EA = 1;

        while (1)
        {
        #ifdef  MASTER                    //for master (receive UART data from PC and send it to slave,
                                          //in the meantime receive SPI data from slave and send it to PC)
                ACC = RecvUart();
                SPISS = 0;                //pull low slave SS
                SPDAT = ACC;              //trigger SPI send
        #endif
        }
}
//////////////////////////////////////////////////////////
void spi_isr( ) interrupt 9 using 1       //SPI interrupt routine 9 (004BH)
{
        SPSTAT = SPIF | WCOL;             //clear SPI status
#ifdef MASTER
        SPISS = 1;                        //push high slave SS
        SendUart(SPDAT);                  //return received SPI data
#else                                     //for salve (receive SPI data from master and
        SPDAT = SPDAT;                    //          send previous SPI data to master)
#endif
}
//////////////////////////////////////////////////////////
```

STC MCU Limited.

```
void InitUart()
{
	SCON = 0x5a;				//set UART mode as 8-bit variable baudrate
	TMOD = 0x20;				//timer1 as 8-bit auto reload mode
	AUXR = 0x40;				//timer1 work at 1T mode
	TH1 = TL1 = BAUD;			//115200 bps
	TR1 = 1;
}

/////////////////////////////////////////////////////////

void InitSPI()
{
	SPDAT = 0;				//initial SPI data
	SPSTAT = SPIF | WCOL;			//clear SPI status
#ifdef MASTER
	SPCTL = SPEN | MSTR;			//master mode
#else
	SPCTL = SPEN;				//slave mode
#endif
}

/////////////////////////////////////////////////////////

void SendUart(BYTE dat)
{
	while (!TI);				//wait pre-data sent
	TI = 0;					//clear TI flag
	SBUF = dat;				//send current data
}

/////////////////////////////////////////////////////////

BYTE RecvUart()
{
	while (!RI);				//wait receive complete
	RI = 0;					//clear RI flag
	return SBUF;				//return receive data
}
```

STC MCU Limited.

2. Assemly code listing:

```
;/*---------------------------------------------------------------------------------------------------*/
;/* --- STC MCU International Limited ---------------------------------------------------------------*/
;/* --- STC 1T Series MCU SPI Demo (1 master and 1 slave) -------------------------------------------*/
/* --- Mobile: (86)13922805190 ---------------------------------------------------------------------*/
/* --- Fax: 86-755-82905966 ------------------------------------------------------------------------*/
/* --- Tel: 86-755-82948412 ------------------------------------------------------------------------*/
/* --- Web: www.STCMCU.com -------------------------------------------------------------------------*/
/* If you want to use the program or the program referenced in the  ----------------------------*/
/* article, please specify in which data and procedures from STC    ----------------------------*/
/*---- In Keil C development environment, select the Intel 8052 to compiling ---------------------*/
/*----  And only contain < reg51.h > as header file ----------------------------------------------*/
/*---------------------------------------------------------------------------------------------------*/

//suppose the frequency of test chip is 18.432MHz

//#define  MASTER                         //define:master undefine:slave

AUXR    DATA    08EH                    ;Auxiliary register
SPSTAT  DATA    0CDH                    ;SPI status register
SPIF    EQU     080H                    ;SPSTAT.7
WCOL    EQU     040H                    ;SPSTAT.6
SPCTL   DATA    0CEH                    ;SPI control register
SSIG    EQU     080H                    ;SPCTL.7
SPEN    EQU     040H                    ;SPCTL.6
DORD    EQU     020H                    ;SPCTL.5
MSTR    EQU     010H                    ;SPCTL.4
CPOL    EQU     008H                    ;SPCTL.3
CPHA    EQU     004H                    ;SPCTL.2
SPDHH   EQU     000H                    ;CPU_CLK/4
SPDH    EQU     001H                    ;CPU_CLK/16
SPDL    EQU     002H                    ;CPU_CLK/64
SPDLL   EQU     003H                    ;CPU_CLK/128
SPDAT   DATA    0CFH                    ;SPI data register
SPISS   BIT     P1.3                    ;SPI slave select, connect to slave' SS(P1.2) pin

IE2     EQU     0AFH                    ;interrupt enable rgister 2
ESPI    EQU     02H                     ;IE2.1

;///////////////////////////////////////////////////////////

        ORG     0000H
        LJMP    RESET
```

STC MCU Limited.

```
        ORG     004BH                           ;SPI interrupt routine
SPI_ISR:
        PUSH    ACC
        PUSH    PSW
        MOV     SPSTAT, #SPIF | WCOL            ;clear SPI status
#ifdef MASTER
        SETB    SPISS                           ;push high slave SS
        MOV     A,      SPDAT                   ;return received SPI data
        LCALL   SEND_UART
#else                                           ;for salve (receive SPI data from master and
        MOV     SPDAT,  SPDAT                   ;send previous SPI data to master)
#endif
        POP     PSW
        POP     ACC
        RETI

;/////////////////////////////////////////////////////////

        ORG     0100H
RESET:
        LCALL   INIT_UART                       ;initial UART
        LCALL   INIT_SPI                        ;initial SPI
        ORL     IE2,    #ESPI
        SETB    EA
MAIN:
#ifdef MASTER                                   //for master (receive UART data from PC and send it to slave,
        LCALL   RECV_UART                       ; in the meantimereceive SPI data from slave and send it to PC)
        CLR     SPISS                           ;pull low slave SS
        MOV     SPDAT,  A                       ;trigger SPI send
#endif
        SJMP    MAIN

;/////////////////////////////////////////////////////////

INIT_UART:
        MOV     SCON,   #5AH                    ;set UART mode as 8-bit variable baudrate
        MOV     TMOD,   #20H                    ;timer1 as 8-bit auto reload mode
        MOV     AUXR,   #40H                    ;timer1 work at 1T mode
        MOV     TL1,    #0FBH                   ;115200 bps(256 - 18432000 / 32 / 115200)
        MOV     TH1,    #0FBH
        SETB    TR1
        RET

;/////////////////////////////////////////////////////////
```

STC MCU Limited.

```
INIT_SPI:
        MOV     SPDAT,  #0                      ;initial SPI data
        MOV     SPSTAT, #SPIF | WCOL            ;clear SPI status
#ifdef MASTER
        MOV     SPCTL,  #SPEN | MSTR            ;master mode
#else
        MOV     SPCTL,  #SPEN                   ;slave mode
#endif
        RET

;/////////////////////////////////////////////////////////

SEND_UART:
        JNB     TI,     $                       ;wait pre-data sent
        CLR     TI                              ;clear TI flag
        MOV     SBUF,   A                       ;send current data
        RET

;/////////////////////////////////////////////////////////

RECV_UART:
        JNB     RI,$                            ;wait receive complete
        CLR     RI                              ;clear RI flag
        MOV     A,      SBUF                    ;return receive data
        RET
        RET

;/////////////////////////////////////////////////////////

        END
```

STC MCU Limited.

15.4.2 SPI Function Demo Programs using Polling mode (C and ASM)

1. C code listing:

```
;/*---------------------------------------------------------------------------------------------------*/
;/* --- STC MCU International Limited ---------------------------------------------------------------*/
;/* --- STC 1T Series MCU SPI Demo (1 master and 1 slave) -------------------------------------------*/
/* --- Mobile: (86)13922805190 ---------------------------------------------------------------------*/
/* --- Fax: 86-755-82905966 ------------------------------------------------------------------------*/
/* --- Tel: 86-755-82948412 ------------------------------------------------------------------------*/
/* --- Web: www.STCMCU.com -------------------------------------------------------------------------*/
/* If you want to use the program or the program referenced in the  ----------------------------*/
/* article, please specify in which data and procedures from STC    ----------------------------*/
/*---- In Keil C development environment, select the Intel 8052 to compiling ---------------------*/
/*----  And only contain < reg51.h > as header file ----------------------------------------------*/
/*---------------------------------------------------------------------------------------------------*/

//suppose the frequency of test chip is 18.432MHz

#include "reg51.h"

//#define  MASTER                                  //define:master undefine:slave
#define   FOSC              18432000L
#define   BAUD              (256 - FOSC / 32 / 115200)

typedef   unsigned char     BYTE;
typedef   unsigned int      WORD;
typedef   unsigned long     DWORD;

sfr       AUXR    =  0x8e;                        //Auxiliary register

sfr       SPSTAT  =  0xcd;                        //SPI status register
#define   SPIF    0x80                            //SPSTAT.7
#define   WCOL    0x40                            //SPSTAT.6
sfr       SPCTL   =  0xce;                        //SPI control register
#define   SSIG    0x80                            //SPCTL.7
#define   SPEN    0x40                            //SPCTL.6
#define   DORD    0x20                            //SPCTL.5
#define   MSTR    0x10                            //SPCTL.4
#define   CPOL    0x08                            //SPCTL.3
#define   CPHA    0x04                            //SPCTL.2
#define   SPDHH   0x00                            //CPU_CLK/4
#define   SPDH    0x01                            //CPU_CLK/16
#define   SPDL    0x02                            //CPU_CLK/64
#define   SPDLL   0x03                            //CPU_CLK/128
sfr       SPDAT   =  0xcf;                        //SPI data register
sbit      SPISS   =  P1^3;                        //SPI slave select, connect to slave' SS(P1.2) pin

void      InitUart();
void      InitSPI();
```

STC MCU Limited.

```
void    SendUart(BYTE dat);                     //send data to PC
BYTE    RecvUart();                             //receive data from PC
BYTE    SPISwap(BYTE dat);                      //swap SPI data between master
/////////////////////////////////////////////////////////

void main()
{
        InitUart();                             //initial UART
        InitSPI();                              //initial SPI

        while (1)
        {
        #ifdef MASTER           //for master (receive UART data from PC and send it to slave,
                                //  in the meantime receive SPI data from slave and send it to PC)
                SendUart(SPISwap(RecvUart()));
        #else                                   //for salve (receive SPI data from master and
                ACC = SPISwap(ACC);             //      send previous SPI data to master)
        #endif
        }
}

/////////////////////////////////////////////////////////

void InitUart()
{
        SCON = 0x5a;                            //set UART mode as 8-bit variable baudrate
        TMOD = 0x20;                            //timer1 as 8-bit auto reload mode
        AUXR = 0x40;                            //timer1 work at 1T mode
        TH1 = TL1 = BAUD;                       //115200 bps
        TR1 = 1;
}

/////////////////////////////////////////////////////////

void InitSPI()
{
        SPDAT = 0;                              //initial SPI data
        SPSTAT = SPIF | WCOL;                   //clear SPI status
#ifdef  MASTER
        SPCTL = SPEN | MSTR;                    //master mode
#else
        SPCTL = SPEN;                           //slave mode
#endif
}
```

STC MCU Limited.

```
//////////////////////////////////////////////////////////
void SendUart(BYTE dat)
{
        while (!TI);                    //wait pre-data sent
        TI = 0;                         //clear TI flag
        SBUF = dat;                     //send current data
}

//////////////////////////////////////////////////////////

BYTE RecvUart()
{
        while (!RI);                    //wait receive complete
        RI = 0;                         //clear RI flag
        return SBUF;                    //return receive data
}

//////////////////////////////////////////////////////////

BYTE SPISwap(BYTE dat)
{
#ifdef MASTER
        SPISS = 0;                      //pull low slave SS
#endif
        SPDAT = dat;                    //trigger SPI send
        while (!(SPSTAT & SPIF));       //wait send complete
        SPSTAT = SPIF | WCOL;           //clear SPI status
#ifdef MASTER
        SPISS = 1;                      //push high slave SS
#endif
        return SPDAT;                   //return received SPI data
}
```

STC MCU Limited.

2. Assemly code listing:

```
;/*---------------------------------------------------------------------------------------------------*/
;/* --- STC MCU International Limited ---------------------------------------------------------------*/
;/* --- STC 1T Series MCU SPI Demo (1 master and 1 slave) -------------------------------------------*/
/* --- Mobile: (86)13922805190 ---------------------------------------------------------------------*/
/* --- Fax: 86-755-82905966 ------------------------------------------------------------------------*/
/* --- Tel: 86-755-82948412 ------------------------------------------------------------------------*/
/* --- Web: www.STCMCU.com -------------------------------------------------------------------------*/
/* If you want to use the program or the program referenced in the  ----------------------------*/
/* article, please specify in which data and procedures from STC    ----------------------------*/
/*---- In Keil C development environment, select the Intel 8052 to compiling ------------------*/
/*----  And only contain < reg51.h > as header file ---------------------------------------------*/
/*---------------------------------------------------------------------------------------------------*/

//suppose the frequency of test chip is 18.432MHz

//#define  MASTER                          //define:master undefine:slave

AUXR    DATA    08EH                    ;Auxiliary register
SPSTAT  DATA    0CDH                    ;SPI status register
SPIF    EQU     080H                    ;SPSTAT.7
WCOL    EQU     040H                    ;SPSTAT.6
SPCTL   DATA    0CEH                    ;SPI control register
SSIG    EQU     080H                    ;SPCTL.7
SPEN    EQU     040H                    ;SPCTL.6
DORD    EQU     020H                    ;SPCTL.5
MSTR    EQU     010H                    ;SPCTL.4
CPOL    EQU     008H                    ;SPCTL.3
CPHA    EQU     004H                    ;SPCTL.2
SPDHH   EQU     000H                    ;CPU_CLK/4
SPDH    EQU     001H                    ;CPU_CLK/16
SPDL    EQU     002H                    ;CPU_CLK/64
SPDLL   EQU     003H                    ;CPU_CLK/128
SPDAT   DATA    0CFH                    ;SPI data register
SPISS   BIT     P1.3                    ;SPI slave select, connect to slave' SS(P1.2) pin

;///////////////////////////////////////////////////////

        ORG     0000H
        LJMP    RESET
        ORG     0100H
RESET:
        LCALL   INIT_UART               ;initial UART
        LCALL   INIT_SPI                ;initial SPI
```

STC MCU Limited.

```
MAIN:
#ifdef  MASTE                   //for master (receive UART data from PC and send it to slave, in the meantime
        LCALL   RECV_UART               ;       receive SPI data from slave and send it to PC)
        LCALL   SPI_SWAP
        LCALL   SEND_UART
#else                                   //for salve (receive SPI data from master and
        LCALL   SPI_SWAP                ;       send previous SPI data to master)
#endif
        SJMP    MAIN
;///////////////////////////////////////////////////////

INIT_UART:
        MOV     SCON,   #5AH            ;set UART mode as 8-bit variable baudrate
        MOV     TMOD,   #20H            ;timer1 as 8-bit auto reload mode
        MOV     AUXR,   #40H            ;timer1 work at 1T mode
        MOV     TL1,    #0FBH           ;115200 bps(256 - 18432000 / 32 / 115200)
        MOV     TH1,    #0FBH
        SETB    TR1
        RET

;///////////////////////////////////////////////////////

INIT_SPI:
        MOV     SPDAT,  #0              ;initial SPI data
        MOV     SPSTAT, #SPIF | WCOL    ;clear SPI status
#ifdef  MASTER
        MOV     SPCTL,  #SPEN | MSTR    ;master mode
#else
        MOV     SPCTL,  #SPEN           ;slave mode
#endif
        RET

;///////////////////////////////////////////////////////

SEND_UART:
        JNB     TI,     $               ;wait pre-data sent
        CLR     TI                      ;clear TI flag
        MOV     SBUF,   A               ;send current data
        RET

;///////////////////////////////////////////////////////
```

STC MCU Limited.

```
RECV_UART:
        JNB     RI,     $                       ;wait receive complete
        CLR     RI                              ;clear RI flag
        MOV     A,      SBUF                    ;return receive data
        RET
        RET

;/////////////////////////////////////////////////////////

SPI_SWAP:
#ifdef MASTER
        CLR     SPISS                           ;pull low slave SS
#endif
        MOV     SPDAT,  A                       ;trigger SPI send
WAIT:
        MOV     A,      SPSTAT
        JNB     ACC.7,  WAIT                    ;wait send complete
        MOV     SPSTAT, #SPIF | WCOL            ;clear SPI status
#ifdef MASTER
        SETB    SPISS                           ;push high slave SS
#endif
        MOV     A,      SPDAT                   ;return received SPI data
        RET

;/////////////////////////////////////////////////////////

        END
```

STC MCU Limited.

15.5 SPI Function Demo Program(Each other as Master-Slave)

15.5.1 SPI Function Demo Programs using Interrupts (C and ASM)

1. C code listing:

```
;/*---------------------------------------------------------------------------------------------------*/
;/* --- STC MCU International Limited ---------------------------------------------------------------*/
;/* --- STC 1T Series MCU SPI Demo (Each other as the master-slave) ---------------------------------*/
/* --- Mobile: (86)13922805190 ---------------------------------------------------------------------*/
/* --- Fax: 86-755-82905966 ------------------------------------------------------------------------*/
/* --- Tel: 86-755-82948412 ------------------------------------------------------------------------*/
/* --- Web: www.STCMCU.com -------------------------------------------------------------------------*/
/* If you want to use the program or the program referenced in the  ----------------------------*/
/* article, please specify in which data and procedures from STC    ----------------------------*/
/*---- In Keil C development environment, select the Intel 8052 to compiling ---------------------*/
/*----  And only contain < reg51.h > as header file ----------------------------------------------*/
/*---------------------------------------------------------------------------------------------------*/

//suppose the frequency of test chip is 18.432MHz

#include "reg51.h"

#define FOSC    18432000L
#define BAUD    (256 - FOSC / 32 / 115200)

typedef unsigned char   BYTE;
typedef unsigned int    WORD;
typedef unsigned long   DWORD;

sfr     AUXR  = 0x8e;                   //Auxiliary register

sfr     SPSTAT  = 0xcd;                 //SPI status register
#define SPIF    0x80                    //SPSTAT.7
#define WCOL    0x40                    //SPSTAT.6
sfr     SPCTL   = 0xce;                 //SPI control register
#define SSIG    0x80                    //SPCTL.7
#define SPEN    0x40                    //SPCTL.6
#define DORD    0x20                    //SPCTL.5
#define MSTR    0x10                    //SPCTL.4
#define CPOL    0x08                    //SPCTL.3
#define CPHA    0x04                    //SPCTL.2
#define SPDHH   0x00                    //CPU_CLK/4
#define SPDH    0x01                    //CPU_CLK/16
#define SPDL    0x02                    //CPU_CLK/64
#define SPDLL   0x03                    //CPU_CLK/128
sfr     SPDAT   =       0xcf;           //SPI data register
sbit    SPISS   =       P1^3;           //SPI slave select, connect to other MCU's SS(P1.2) pin
```

STC MCU Limited.

```
sfr     IE2     =       0xAF;                   //interrupt enable rgister 2
#define ESPI    0x02                            //IE2.1
void InitUart();
void InitSPI();
void SendUart(BYTE dat);                        //send data to PC
BYTE RecvUart();                                //receive data from PC

bit MSSEL;                                      //1: master 0:slave

//////////////////////////////////////////////////////////
void main()
{
        InitUart();             //initial UART
        InitSPI();              //initial SPI
        IE2 |= ESPI;
        EA = 1;

        while (1)
        {
                if (RI)
                {
                        SPCTL = SPEN | MSTR;            //set as master
                        MSSEL = 1;
                        ACC = RecvUart();
                        SPISS = 0;                      //pull low slave SS
                        SPDAT = ACC;                    //trigger SPI send
                }
        }
}

//////////////////////////////////////////////////////////
void spi_isr() interrupt 9 using 1                      //SPI interrupt routine 9 (004BH)
{
        SPSTAT = SPIF | WCOL;                           //clear SPI status
        if (MSSEL)
        {
                SPCTL = SPEN;                           //reset as slave
                MSSEL = 0;
                SPISS = 1;                              //push high slave SS
                SendUart(SPDAT);                        //return received SPI data
        }
        else
        {                                               //for salve (receive SPI data from master and
                SPDAT = SPDAT;                          //      send previous SPI data to master)
   }
}

//////////////////////////////////////////////////////////
```

STC MCU Limited.

```
void InitUart()
{
    SCON = 0x5a;                //set UART mode as 8-bit variable baudrate
    TMOD = 0x20;                //timer1 as 8-bit auto reload mode
    AUXR = 0x40;                //timer1 work at 1T mode
    TH1 = TL1 = BAUD;           //115200 bps
    TR1 = 1;
}

/////////////////////////////////////////////////////////

void InitSPI()
{
    SPDAT = 0;                  //initial SPI data
    SPSTAT = SPIF | WCOL;       //clear SPI status
    SPCTL = SPEN;               //slave mode
}

/////////////////////////////////////////////////////////

void SendUart(BYTE dat)
{
    while (!TI);                //wait pre-data sent
    TI = 0;                     //clear TI flag
    SBUF = dat;                 //send current data
}

/////////////////////////////////////////////////////////

BYTE RecvUart()
{
    while (!RI);                //wait receive complete
    RI = 0;                     //clear RI flag
    return SBUF;                //return receive data
}
```

STC MCU Limited.

2. **Assembly code listing:**

```
;/*---------------------------------------------------------------------------------------------------*/
;/* --- STC MCU International Limited ---------------------------------------------------------------*/
;/* --- STC 1T Series MCU SPI Demo (Each other as the master-slave) ---------------------------------*/
/* --- Mobile: (86)13922805190 ---------------------------------------------------------------------*/
/* --- Fax: 86-755-82905966 ------------------------------------------------------------------------*/
/* --- Tel: 86-755-82948412 ------------------------------------------------------------------------*/
/* --- Web: www.STCMCU.com -------------------------------------------------------------------------*/
/* If you want to use the program or the program referenced in the  ----------------------------*/
/* article, please specify in which data and procedures from STC    ----------------------------*/
/*---- In Keil C development environment, select the Intel 8052 to compiling ------------------*/
/*----  And only contain < reg51.h > as header file ------------------------------------------------*/
/*---------------------------------------------------------------------------------------------------*/

//suppose the frequency of test chip is 18.432MHz

AUXR    DATA    08EH                    ;Auxiliary register
SPSTAT  DATA    0CDH                    ;SPI status register
SPIF    EQU     080H                    ;SPSTAT.7
WCOL    EQU     040H                    ;SPSTAT.6
SPCTL   DATA    0CEH                    ;SPI control register
SSIG    EQU     080H                    ;SPCTL.7
SPEN    EQU     040H                    ;SPCTL.6
DORD    EQU     020H                    ;SPCTL.5
MSTR    EQU     010H                    ;SPCTL.4
CPOL    EQU     008H                    ;SPCTL.3
CPHA    EQU     004H                    ;SPCTL.2
SPDHH   EQU     000H                    ;CPU_CLK/4
SPDH    EQU     001H                    ;CPU_CLK/16
SPDL    EQU     002H                    ;CPU_CLK/64
SPDLL   EQU     003H                    ;CPU_CLK/128
SPDAT   DATA    0CFH                    ;SPI data register
SPISS   BIT     P1.3                    ;SPI slave select, connect to other MCU's SS(P1.2) pin

IE2     EQU     0AFH                    ;interrupt enable rgister 2
ESPI    EQU     02H                     ;IE2.1

MSSEL   BIT     20H.0                   ;1: master 0:slave

;////////////////////////////////////////////////////////

        ORG     0000H
        LJMP    RESET

        ORG     004BH                   ;SPI interrupt routine
SPI_ISR:
        PUSH    ACC
        PUSH    PSW
```

STC MCU Limited.

```
        MOV     SPSTAT, #SPIF | WCOL            ;clear SPI status
        JBC     MSSEL,  MASTER_SEND
SLAVE_RECV:
                                                ;for salve (receive SPI data from master and
        MOV     SPDAT,  SPDAT                   ;       send previous SPI data to master)
        JMP     SPI_EXIT
MASTER_SEND:
        SETB    SPISS                           ;push high slave SS
        MOV     SPCTL,  #SPEN                   ;       ;reset as slave
        MOV     A,      SPDAT                   ;return received SPI data
        LCALL   SEND_UART
SPI_EXIT:
        POP     PSW
        POP     ACC
        RETI

;///////////////////////////////////////////////////////

        ORG     0100H
RESET:
        MOV     SP,#3FH
        LCALL   INIT_UART                       ;initial UART
        LCALL   INIT_SPI                        ;initial SPI
        ORL     IE2,#ESPI
        SETB    EA
MAIN:
        JNB     RI,     $                       ;wait UART data
        MOV     SPCTL,  #SPEN | MSTR            ; ;set as master
        SETB    MSSEL
        LCALL   RECV_UART                       ;receive UART data from PC
        CLR     SPISS                           ;pull low slave SS
        MOV     SPDAT,A                         ;trigger SPI send
        SJMP    MAIN

;///////////////////////////////////////////////////////

INIT_UART:
        MOV     SCON,   #5AH                    ;set UART mode as 8-bit variable baudrate
        MOV     TMOD,   #20H                    ;timer1 as 8-bit auto reload mode
        MOV     AUXR    ,#40H                   ;timer1 work at 1T mode
        MOV     TL1,    #0FBH                   ;115200 bps(256 - 18432000 / 32 / 115200)
        MOV     TH1,    #0FBH
        SETB    TR1
        RET
```

STC MCU Limited.

```
;/////////////////////////////////////////////////////////

INIT_SPI:
        MOV     SPDAT,  #0                      ;initial SPI data
        MOV     SPSTAT, #SPIF | WCOL            ;clear SPI status
        MOV     SPCTL,  #SPEN                   ;slave mode
        RET

;/////////////////////////////////////////////////////////

SEND_UART:
        JNB     TI,     $                       ;wait pre-data sent
        CLR     TI                              ;clear TI flag
        MOV     SBUF,   A                       ;send current data
        RET

;/////////////////////////////////////////////////////////

RECV_UART:
        JNB     RI,     $                       ;wait receive complete
        CLR     RI                              ;clear RI flag
        MOV     A,      SBUF                    ;return receive data
        RET
        RET

;/////////////////////////////////////////////////////////

        END
```

STC MCU Limited.

15.5.2 SPI Function Demo Programs using Polling

1. C code listing:

```
/*---------------------------------------------------------------------------------------------------*/
/* --- STC MCU International Limited ---------------------------------------------------------------*/
/* --- STC12C5Axx Series MCU SPI Demo(Each other as the master-slave) ------------------------------*/
/* --- Mobile: (86)13922805190 ---------------------------------------------------------------------*/
/* --- Fax: 86-755-82905966 ------------------------------------------------------------------------*/
/* --- Tel: 86-755-82948412 ------------------------------------------------------------------------*/
/* --- Web: www.STCMCU.com -------------------------------------------------------------------------*/
/* If you want to use the program or the program referenced in the  ----------------------------*/
/* article, please specify in which data and procedures from STC    ----------------------------*/
/*---- In Keil C development environment, select the Intel 8052 to compiling ---------------------*/
/*----  And only contain < reg51.h > as header file ----------------------------------------------*/
/*---------------------------------------------------------------------------------------------------*/

//suppose the frequency of test chip is 18.432MHz

#include "reg51.h"

#define   FOSC              18432000L
#define   BAUD              (256 - FOSC / 32 / 115200)

typedef   unsigned char     BYTE;
typedef   unsigned int      WORD;
typedef   unsigned long     DWORD;

sfr       AUXR    =         0x8e;                 //Auxiliary register

sfr       SPSTAT  =         0xcd;                 //SPI status register
#define   SPIF              0x80                  //SPSTAT.7
#define   WCOL              0x40                  //SPSTAT.6
sfr       SPCTL   =         0xce;                 //SPI control register
#define   SSIG              0x80                  //SPCTL.7
#define   SPEN              0x40                  //SPCTL.6
#define   DORD              0x20                  //SPCTL.5
#define   MSTR              0x10                  //SPCTL.4
#define   CPOL              0x08                  //SPCTL.3
#define   CPHA              0x04                  //SPCTL.2
#define   SPDHH             0x00                  //CPU_CLK/4
#define   SPDH              0x01                  //CPU_CLK/16
#define   SPDL              0x02                  //CPU_CLK/64
#define   SPDLL             0x03                  //CPU_CLK/128
sfr       SPDAT   =         0xcf;                 //SPI data register
sbit      SPISS   =         P1^3;                 //SPI slave select, connect to slave' SS(P1.2) pin

void      InitUart();
void      InitSPI();
```

STC MCU Limited.

```
void    SendUart(BYTE dat);                     //send data to PC
BYTE    RecvUart();                             //receive data from PC
BYTE    SPISwap(BYTE dat);                      //swap SPI data between master

/////////////////////////////////////////////////////////

void main()
{
        InitUart();                             //initial UART
        InitSPI();                              //initial SPI

        while (1)
        {
                if (RI)
                {
                        SPCTL = SPEN | MSTR;            //set as master
                        SendUart(SPISwap(RecvUart()));
                        SPCTL = SPEN;                   //reset as slave
                }
                if (SPSTAT & SPIF)
                {
                        SPSTAT = SPIF | WCOL; //clear SPI status
                        SPDAT = SPDAT;          //mov data from receive buffer to send buffer
                }
        }
}

/////////////////////////////////////////////////////////
void InitUart()
{
        SCON = 0x5a;                            //set UART mode as 8-bit variable baudrate
        TMOD = 0x20;                             //timer1 as 8-bit auto reload mode
        AUXR = 0x40;                            //timer1 work at 1T mode
        TH1 = TL1 = BAUD;                       //115200 bps
        TR1 = 1;
}

/////////////////////////////////////////////////////////
void InitSPI()
{
        SPDAT = 0;                              //initial SPI data
        SPSTAT = SPIF | WCOL;                   //clear SPI status
        SPCTL = SPEN;                           //slave mode
}
```

STC MCU Limited.

```
//////////////////////////////////////////////////////////////

void SendUart(BYTE dat)
{
        while (!TI);                    //wait pre-data sent
        TI = 0;                         //clear TI flag
        SBUF = dat;                     //send current data
}

//////////////////////////////////////////////////////////////

BYTE RecvUart()
{
        while (!RI);                    //wait receive complete
        RI = 0;                         //clear RI flag
        return SBUF;                    //return receive data
}

//////////////////////////////////////////////////////////////

BYTE SPISwap(BYTE dat)
{
        SPISS = 0;                      //pull low slave SS
        SPDAT = dat;                    //trigger SPI send
        while (!(SPSTAT & SPIF));       //wait send complete
        SPSTAT = SPIF | WCOL;           //clear SPI status
        SPISS = 1;                      //push high slave SS
        return SPDAT;                   //return received SPI data
}
```

STC MCU Limited.

2. Assemly code listing:

```
/*---------------------------------------------------------------------------------------------------*/
/* --- STC MCU International Limited ---------------------------------------------------------------*/
/* --- STC12C5Axx Series MCU SPI Demo(Each other as the master-slave) ------------------------------*/
/* --- Mobile: (86)13922805190 ---------------------------------------------------------------------*/
/* --- Fax: 86-755-82905966 ------------------------------------------------------------------------*/
/* --- Tel: 86-755-82948412 ------------------------------------------------------------------------*/
/* --- Web: www.STCMCU.com -------------------------------------------------------------------------*/
/* If you want to use the program or the program referenced in the  ----------------------------*/
/* article, please specify in which data and procedures from STC    ----------------------------*/
/*---- In Keil C development environment, select the Intel 8052 to compiling ----------------------*/
/*----  And only contain < reg51.h > as header file ------------------------------------------------*/
/*---------------------------------------------------------------------------------------------------*/

//suppose the frequency of test chip is 18.432MHz

AUXR    DATA    08EH                    ;Auxiliary register
SPSTAT  DATA    0CDH                    ;SPI status register
SPIF    EQU     080H                    ;SPSTAT.7
WCOL    EQU     040H                    ;SPSTAT.6
SPCTL   DATA    0CEH                    ;SPI control register
SSIG    EQU     080H                    ;SPCTL.7
SPEN    EQU     040H                    ;SPCTL.6
DORD    EQU     020H                    ;SPCTL.5
MSTR    EQU     010H                    ;SPCTL.4
CPOL    EQU     008H                    ;SPCTL.3
CPHA    EQU     004H                    ;SPCTL.2
SPDHH   EQU     000H                    ;CPU_CLK/4
SPDH    EQU     001H                    ;CPU_CLK/16
SPDL    EQU     002H                    ;CPU_CLK/64
SPDLL   EQU     003H                    ;CPU_CLK/128
SPDAT   DATA    0CFH                    ;SPI data register
SPISS   BIT     P1.3                    ;SPI slave select, connect to slave' SS(P1.4) pin

;///////////////////////////////////////////////////////

        ORG     0000H
        LJMP    RESET
        ORG     0100H
RESET:
        LCALL   INIT_UART               ;initial UART
        LCALL   INIT_SPI                ;initial SPI

MAIN:
        JB      RI,     MASTER_MODE
```

STC MCU Limited.

```
SLAVE_MODE:
        MOV     A,      SPSTAT
        JNB     ACC.7,  MAIN
        MOV     SPSTAT, #SPIF | WCOL                    ;clear SPI status
        MOV     SPDAT,  SPDAT                           ;return received SPI data
        SJMP    MAIN
MASTER_MODE:
        MOV     SPCTL,  #SPEN | MSTR                    ;set as master
        LCALL   RECV_UART                               ;receive UART data from PC
        LCALL   SPI_SWAP            ;send it to slave, in the meantime, receive SPI data from slave
        LCALL   SEND_UART           ;send SPI data to PC
        MOV     SPCTL,  #SPEN       ;       ;reset as slave
        SJMP    MAIN

;////////////////////////////////////////////////////////

INIT_UART:
        MOV     SCON,   #5AH        ;set UART mode as 8-bit variable baudrate
        MOV     TMOD,   #20H        ;timer1 as 8-bit auto reload mode
        MOV     AUXR,   #40H        ;timer1 work at 1T mode
        MOV     TL1,    #0FBH       ;115200 bps(256 - 18432000 / 32 / 115200)
        MOV     TH1,    #0FBH
        SETB    TR1
        RET

;////////////////////////////////////////////////////////

INIT_SPI:
        MOV     SPDAT,  #0                              ;initial SPI data
        MOV     SPSTAT, #SPIF | WCOL                    ;clear SPI status
        MOV     SPCTL,  #SPEN                           ;slave mode
        RET

;////////////////////////////////////////////////////////

SEND_UART:
        JNB     TI,     $                               ;wait pre-data sent
        CLR     TI                                      ;clear TI flag
        MOV     SBUF,   A                               ;send current data
        RET
```

STC MCU Limited.

```
;/////////////////////////////////////////////////////////

RECV_UART:
        JNB     RI,     $               ;wait receive complete
        CLR     RI                      ;clear RI flag
        MOV     A,      SBUF            ;return receive data
        RET
        RET

;/////////////////////////////////////////////////////////

SPI_SWAP:
        CLR     SPISS                   ;pull low slave SS
        MOV     SPDAT,  A               ;trigger SPI send
WAIT:
        MOV     A,      SPSTAT
        JNB     ACC.7,  WAIT            ;wait send complete
        MOV     SPSTAT, #SPIF | WCOL    ;clear SPI status
        SETB    SPISS                   ;push high slave SS
        MOV     A,      SPDAT           ;return received SPI data
        RET

;/////////////////////////////////////////////////////////

        END
```

STC MCU Limited.

15.6 SPI Demo (Single Master Multiple Slave)

1. Assemly code listing

```
;/*---------------------------------------------------------------------------*/
;/* --- STC MCU International Limited ---------------------------------------*/
;/* --- STC 1T Series MCU SPI ASM Demo --------------------------------------*/
;/* --- Mobile: (86)13922805190 ---------------------------------------------*/
;/* --- Fax: 86-755-82905966 ------------------------------------------------*/
;/* --- Tel: 86-755-82948412 ------------------------------------------------*/
;/* --- Web: www.STCMCU.com -------------------------------------------------*/
;/* If you want to use the program or the program referenced in the  */
;/* article, please specify in which data and procedures from STC    */
;/*---------------------------------------------------------------------------*/
;1. The demo program is suitable for single master multiple slave system
;2. Hardware connection:
;
;
;
;
;
;
;
;
;
;
;
;
;
```

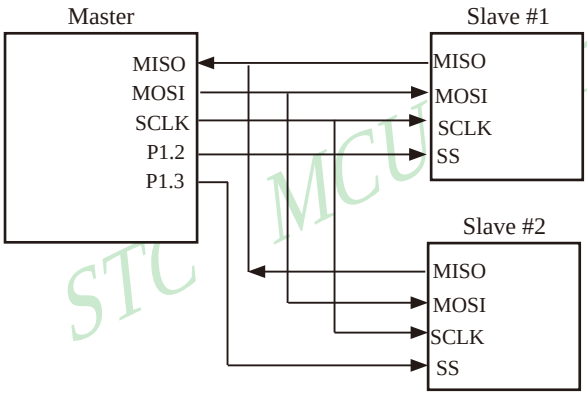

STC MCU Limited.

```
;3. SPI communication :
```

8-bit Master MCU SPI register and 8-bit Slave MCU SPI register combined into a 16-bit cyclic shift register. When Master MCU is written a byte data to SPI data register (SPDAT), the data transmission is triggered immediately. With the SCLK's clock signal, 8-bit data in Master MCU's SPDAT register shift into Slave MCU' s SPDAT through MOSI pin, in the meanwhile, the 8-bit data in Slave MCU's SPDAT register is shifted into Master MCU's SPDAT register through MISO pin.

```
;4. Modification method :
```

a) Set "MASTER_SLAVE EQU 0", then the object file is Master MCU file.
b) Set "MASTER_SLAVE EQU 1", then the object file is Slave #1 MCU file.
c) Set "MASTER_SLAVE EQU 2", then the object file is Slave #2 MCU file.
d) Power-on the whole system (Master MCU, Slave #1 MCU and Slave #2 MCU)
e) P1.2 and P1.3 respectively control Slave #1 and Slave #2, but still a moment, only one Slave MCU is selected.
f) Using serial debugging assistant debug.

```
;5. Using inquiry mothed to receive SPI data
;6. Work environment: Fosc=18.432MHz and 9600 baudrat
```

```
;Define const
MASTER_SLAVE EQU    0       ;Master MCU
;MASTER_SLAVEEQU    1       ;Slave #1 MCU
;MASTER_SLAVEEQU    2       ;Slave #2 MCU

;RELOAD_8BIT_DATA    EQU    0FFH    ;56700@22.1184MHz
RELOAD_8BIT_DATA     EQU    0FBH    ;9600@18.432MHz
;RELOAD_8BIT_DATA    EQU    0F6H    ;4800@18.432MHz
;RELOAD_8BIT_DATA    EQU    0FFH    ;28800@11.0592MHz
;
;Define SFR
AUXR    EQU     8EH     ; Auxiliary register
SPCTL   EQu     85H     ;SPI control register
SPSTAT  EQU     84H     ;SPI status register
SPDAT   EQU     86H     ;SPI data register
EADC_SPI        EQU     IE.5    ;SPI interrupt enable bit

;Define SPI function pin
SCLK    EQU     P1.7    ;SPI clock pin
MISO    EQU     P1.6    ;SPI master input/slave output pin
MOSI    EQU     P1.5    ;SPI master output/slave input pin
SS              EQU     P1.4    ;SPI slave select pin
Slave1_SS       EQU     P1.2    ;slave #1 MCU select pin
Slave2_SS       EQU     P1.3    ;slave #2 MCU select pin

LED_MCU_START   EQU     P3.4    ;MCU work LED

;Define user variable
Flags       EQU     20H     ;user flag
SPI_Receive         EQU     Falgs.0 ;SPI receive flag
T0_10mS_count       EQU     30H     ;10ms counter
SPI_buffer          EQU     31H     ;SPI revecie buffer
;------------------------------------------------------------
            ORG     0000H
            LJMP    MAIN
            ORG     000BH
            LJMP    timer0_Routine      ;timer0 interrupt routine
            ORG     002BH
            LJMP    ADC_SPI_Interrupt_Routine ;SPI interrupt routine
;------------------------------------------------------------
            ORG     0080H
MAIN:
            CLR     LED_MCU_START           ;work led on
            MOV     SP,#7FH  ;initial SP
            ACALL   Initial_System      ;system initial
if MASTER_SLAVE == 0
            CLR     Slave1_SS           ;select slave #1 MCU
```

STC MCU Limited.

```
Check_RS232:
        JNB     RI,Master_Check_SPI         ;check UART receive
        ACALL   Get_Byte_From_RS232         ;load UART data to ACC
;       ACALL   RS232_Send_Byte ;send data in ACC to PC
;       SJMP    Check_RS232
        ACALL   SPI_Send_Byte       ;send data in ACC to SPI slave
        SJMP    Check_RS232
Master_Check_SPI:
        JNB     SPI_Receive,Check_RS232   ;check SPI receive
        MOV     A,SPI_buffer        ;load SPI data to ACC
        CLR     SPI_Recevie         ;clear SPI receive flag
        ACALL   SPI_Send_Byte       ; send data in ACC to SPI slave
        SJMP    Check_RS232
else
Slave_Check_SPI:
        JNB     SPI_Receive,Slave_Check_SPI         ;check SPI receive
        MOV     A,SPI_buffer        ;load SPI data to ACC
        CLR     SPI_Receive         ;clear SPI receive flag
if MASTER_SLAVE == 2
        ADD     A,#1        ;value +1 on slave #2 MCU
endif
        MOV     SPDAT,A;save data into SPDAT
        SJMP    Slave_Check_SPI
endif
;-------------------------------------------------------------
if MASTER_SLAVE == 0
timer0_Routine:
        PUSH    PSW
        PUSH    ACC
        MOV     TH0,#0C4H           ;reload timer0 10ms value
        INC     T0_10mS_count       ;10ms counter
        MOV     A,#200    ;count 200 times
        CLR     C
        SUBB    A,T0_10mS_count
        JNC     timer0_Exit
        CPL     SLAVE1_SS           ;switch slave
        CPL     SLAVE2_SS
        MOV     T0_10mS_count,#0;reset counter
timer0_Exit:
        POP     ACC
        POP     PSW
        RETI
else
timer0_Routine:
        RETI
endif
;-------------------------------------------------------------
```

STC MCU Limited.

```
ADC_SPI_Interrupt_Routine:
        MOV     SPDAT,#0C0H     ;clear SPIF and WCOL flag
        MOV     A,SPDAT         ;save SPI received data
        MOV     SPI_buffer,A
        SETB    SPI_Receive     ;set SPI receive flag
        RETI
;-------------------------------------------------------------
Initial_System:
        ACALL   Initial_Uart    ;initial UART sfr
        ACALL   Initial_SPI     ;initial SPI sfr
        SETB    TR0     ;start timer0
        SETB    ET0     ;enable timer0 interrupt
        MOV     Flags,#0  ;initial flag
        SETB    EA      ;enable global interrupt flag
        RET
;-------------------------------------------------------------
Initial_Uart:
        MOV     SCON,#50H       ;set UART as 8-bit variable mode
        MOV     TMOD,#21H       ;set timer mode
        MOV     TH1,#RELOAD_8BIT_DATA       ;set UART baudrate
        MOV     TL1,#RELOAD_8BIT_DATA
        MOV     PCON,#80H       ;baudrate * 2
        ORL     AUXR,#40H       ;1T mode
        SETB    TR1     ;timer1 start
        RET
;-------------------------------------------------------------
Initial_SPI:
if MASTER_SLAVE == 0
        MOV     SPCTL,#11111100B        ;master mode
else
        MOV     SPCTL,#01101100B        ;slave mode
endif
        MOV     SPSTAT,#11000000B       ;clear SPI flag
        ORL     AUXR,#08H       ;AUXR.3(ESPI) = 1
        SETB    EADC_SPI        ;enable SPI interrupt
        RET
;-------------------------------------------------------------
RS232_Send_Byte:
        CLR     TI      ;ready send
        MOV     SBUF,A  ;write data to TX buffer
        JNB     TI,$    ;wait send completed
        CLR     TI      ;clear TI flag
        RET
;-------------------------------------------------------------
SPI_Send_Byte:
        CLR     EADC_SPI        ;disable SPI interrupt
        MOV     SPDAT,A;write data to SPI data register
```

STC MCU Limited.

```
SPI_Send_Byte_Wait:
        MOV     A,SPSTAT            ;check SPI status
        ANL     A,#80H
        JZ      SPI_Send_Byte_Wait          ;wait SPI send complete
        SETB    EADC_SPI            ;enable SPI interrupt
        RET
;----------------------------------------------------------------
Get_Byte_From_RS232:
        MOV     A,SBUF  ;load data to ACC
        CLR     RI          ;clear UART receive flag
        RET
;----------------------------------------------------------------
        END
```

2. C listing code:

```
/*---------------------------------------------------------------------------*/
/* --- STC MCU International Limited ---------------------------------------*/
/* --- STC 1T Series MCU SPI ASM Demo --------------------------------------*/
/* --- Mobile: (86)13922805190 ----------------------------------------------*/
/* --- Fax: 86-755-82905966 -------------------------------------------------*/
/* --- Tel: 86-755-82948412 -------------------------------------------------*/
/* --- Web: www.STCMCU.com --------------------------------------------------*/
/* If you want to use the program or the program referenced in the  */
/* article, please specify in which data and procedures from STC    */
/*---------------------------------------------------------------------------*/

typedef unsigned char INT8U;
typedef unsigned int INT16U;
typedef unsigned long INT32U;

#include “new_8051.h”

//Define const
#define SPI_INTERRUPT_VECTOR 9
#define TRUE 1
#define FALSE 0
#define MASTER
#define CONFIG_MASTER 0xd0      //master mode
#define CONFIG_SLAVE 0xc0       //slave mode
#define SPIF_WCOL_MASK 0xc0     //SPIF & WCOL mask bit
#define FOSC 1843200
#define BAUD 9600
#define BUF_SIZE 0x20
```

STC MCU Limited.

```
//Define SFR
sfr SPCTL = 0xce;
sbit LED_MCU_START = P3^4;          //work LED
bit SPI_Receive;                    //SPI received flag
bit SPI_status;                     //SPI status
INT8U SPI_buffer;                   //SPI receive data buffer
INT8U RS232_point;
INT8U ISP_point;
INT8U buffer[BUF_SIZE];
//-----------------------------------------------------------------
void Initial_SPI();
void Init_System();
INT8U Get_Byte_From_RS232();
void RS232_Send_Byte(INT8U ch);
void SPI_Send_Byte(INT8U);
void send_buffer_to_PC();
void clear_buffer();
void delay(INT16U d);
void SPI_read_from_slave(INT8U n);
//-----------------------------------------------------------------
void main()
{
        INT32U i=0;
        LED_MCU_START = 0;                                      //work LED on
        Init_System();                                          //system initial
        SPI_Recevie = 0;                                        //initial user flag
        RS232_point = 0;
        ISP_point = 0;
        clear_buffer();                                         //empty buffer
#ifdef MASTER
        while (1)
        {
                if (RI)                                         //check UART RI
                {
                        RI = 0;
                        if (RS232_point < BUF_SIZE)
                        {
                                buffer[RS232_point++] = SBUF    //save UART RX data
                        }
                        i = 65000;                              //wait another data
                }
                if (i > 0)
                {
                        i--;                                    //check wait
                        if (i == 0)                     //send all data at wait end
                        {
                                if (RS232_point > 0)
                                {
                                        ISP_point = 0;
```

STC MCU Limited.

```
                                        SPI_status = 1;       //1:SPI send
                                        SPDAT = buffer[ISP_point++];          //trigger SPI send action
                                        while (ISP_point < RS232_point);      //other send in interrupt
                                }
                                delay(300);
                                SPI_read_from_slave(RS232_point);    //read slave data
                                send_buffer_to_PC();          //send back to PC
                                clear_buffer();
                                SPI_Receive = 0;
                                RS232_point = 0;
                                ISP_point = 0;
                                RI = 0;
                        }
                }
        }
#else
        SPI_Receive = 0;
        SPI_status = 0;                                 //0:SPI receive
        RS232_point = 0;
        ISP_point = 0;
        while (1)
        {
                if (SPI_Recevie)
                {
                        SPI_Receive = 0;
                        i = 10000;                      //wait another data
                }
                if (i > 0)
                {
                        i--;
                        if (i == 0)
                        {
                                if (!SPI_status)      //SPI receive
                                {
                                        RS232_point = ISP_point;
                                        ISP_point = 0;
                                        send_buffer_to_PC();          //send buffer data to PC
                                }
                                ISP_point = 0;
                                SPI_status = 1;       //1:SPI send
                                SPI_Recevie = 0;
                                while (!SPI_Receive);         //wait send the 1st data
                                delay(50);                    //set timeout
                                clear_buffer();
                                RS232_point = 0;
                                ISP_point = 0;
                                SPI_status = 0;       //0:SPI receive
                                SPI_Recevie = 0;
                        }
```

STC MCU Limited.

```
                }
        }
#endif
}
//-----------------------------------------------------------------
void SPI_Interrupt_Routine() interrupt SPI_INTERRUPT_VECTOR
{
        SPI_buffer = SPDAT;                             //save SPI data
        SPSTAT = SPIF_WCOL_MASK;        //clear SPI flag
        SPI_Receive = 1;                                //set SPI received flag
        if (SPI_status)                                 //1:SPI send
        {
                if (ISP_point < RS232_point)
                {
                        SPDAT = buffer[ISP_point];
                        ISP_point++;
                }
        }
        else                                                    //0:SPI receive
        {
                if (ISP_point < BUF_SIZE)
                {
                        buffer[ISP_point] = SPI_buffer;
                        ISP_point++;
                }
        }
}
//-----------------------------------------------------------------
void Initial_RS232()
{
        ES = 0;
        SCON = 0x50;                                    //UART mode(8-bit variable)
        TMOD &= 0x0f;                                   //timer0 mode(8-bit auto-reload)
        TMOD |= 0x20;
        TH1 = TL1 = 256 – FOSC/384/BAUD; //UART baudrate
        TR1 = 1
        AUXR |= 0x40;                                   //1T mode
}
//-----------------------------------------------------------------
void Initial_SPI()
{
#ifdef MASTER
        SPCTL = CONFIG_MASTER;                  //master mode
#else
        SPCTL = CONFIG_SLAVE;           //slave mode
#endif
        SPSTAT = SPIF_WCOL_MASK;        //clear SPI flag
        IE2 |= 0x02;                                                    //enable SPI interrupt
}
```

STC MCU Limited.

```
//-----------------------------------------------------------
void Init_System()
{
        Initial_RS232();                        //initial UART
        Initial_SPI();                          //initial SPI
        EA = 1;
}
//-----------------------------------------------------------
void RS232_Send_Byte(INT8U ch)
{
        TI = 0;                                 //ready send
        SBUF = ch;                                      //write UART data
        while (TI = 0);                         //wait data sent
        TI = 0;                                 //clear TX flag
}
//-----------------------------------------------------------
void send_buffer_to_PC()                        //send all data in buffer to PC
{
        INT8U i;
        if (RS232_point == 0) return;
        RS232_Send_Byte(RS232_point);
        if (i=0; i<RS232_point; i++)
        {
                RS232_Send_Byte(buffer[i]);
        }
}
//-----------------------------------------------------------
void clear_buffer()                             //empty data buffer
{
        INT8U i;
        for (i=0; i<BUF_SIZE; i++)
        {
                buffer[i]  0
        }
}
//-----------------------------------------------------------
void delay(INT16U d)
{
        INT16U i;
        while (d--)
        {
                i = 1000;
                while (i--);
        }
}
```

STC MCU Limited.

```
//-------------------------------------------------------------
#ifdef MASRER
void SPI_read_from_slave(INT8U n)                //receive slave data
{
        INT8U j;

        clear_buffer()
        SPI_status = 0;                                 //0:SPI receive
        ISP_point = 0;
        SPI_Receive = 0;
        SPDAT = 0x00;                                   //trigger SPI clock
        while (!SPI_Receive);
        SPI_Recevie = 0;
        ISP_point = 0;                                  //discard the 1st data
        for (j=0; j<n; j++)
        {
                SPDAT = 0x00;                           //trigger SPI clock
                while (!SPI_Receive);
                SPI_Receive = 0;
        }
}
#endif
```

STC MCU Limited.

15.7 Circuit Digram of Extending 12-bit ADC(TLC2543) by SPI

TLC2543 is a high-precision 12-bit ADC Converter, the price of which is less than RMB 13 yuan

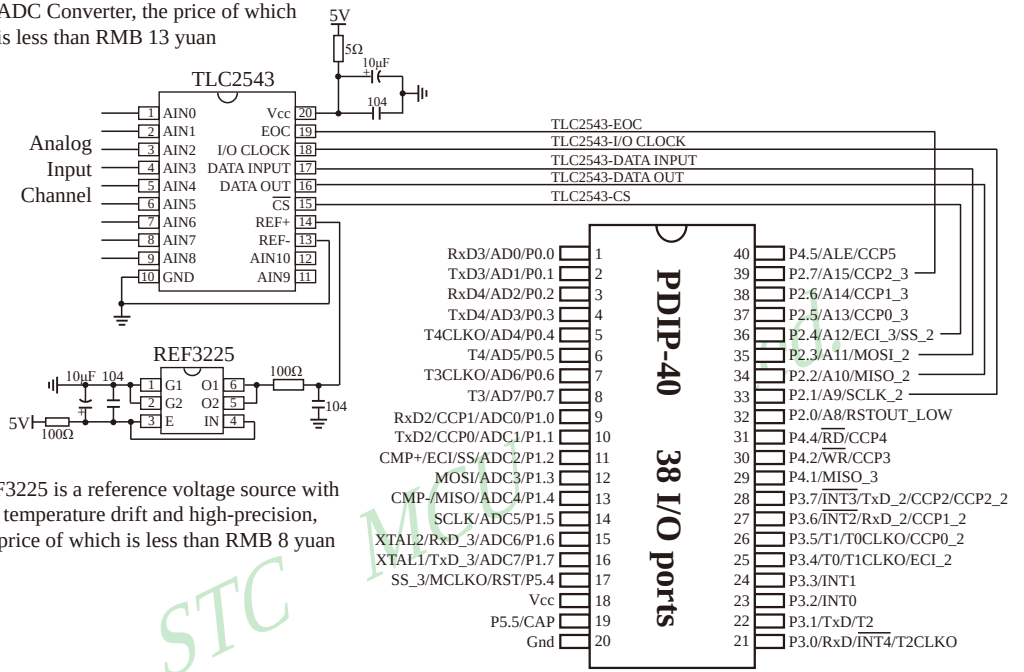

REF3225 is a reference voltage source with low temperature drift and high-precision, the price of which is less than RMB 8 yuan

STC MCU

Chapter 16 Compiler / ISP Programmer / Emulator

16.1 Compiler/Assembler and Head File

About STC MCU Compiler/Assembler :

1. Any traditional compiler / assembler and the popular Keil C51 are suitable for STC MCU.

2. For selection MCU body, the traditional compiler / assembler, you can choose Intel's 8052 / 87C52 / 87C52 / 87C58 or Philips's P87C52 / P87C54/P87C58 in the traditional environment, in Keil environment, you can choose the types in front of the proposed or download the STC chips database file (STC.CDB) from the STC official website (www.STCMCU.com)

3. For STC15 series MCU, in Keil C development environment, select the Intel 8052 to compiling, And only contain < reg51.h > as header file. New special function registers could be declared by sfr and new register bits declared by sbit. Take new special function registers and bits about P4 port for example:

Address statement by C language:

```
sfr  P4    =  0xC0;     //8 bit  Port4  P4.7 P4.6 P4.5 P4.4 P4.3 P4.2 P4.1 P4.0  111,1111
sfr  P4M0  =  0xB4;     //                                                       0000,0000
sfr  P4M1  =  0xB3;     //                                                       0000,0000

sbit     P40    =    P4^0;
sbit     P41    =    P4^1;
sbit     P42    =    P4^2;
sbit     P43    =    P4^3;
sbit     P44    =    P4^4;
sbit     P45    =    P4^5;
sbit     P46    =    P4^6;
sbit     P47    =    P4^7;
```

Address statement by Assembly:

```
P4      EQU   0C0H      ; or  P4      DATA   0C0H
P4M1    EQU   0B3H      ; or  P4M1    DATA   0B3H
P4M0    EQU   0B4H
```

For parts of STC MCU, users can download thier head files from STC official website www.STCMCU.com. In addition, the latest STC ISP tool STC-ISP-15xx-V6.85 also could generate head files for STC15 series. See the following figure. These head files would replace "reg51.h" if need be.

STC MCU Limited.

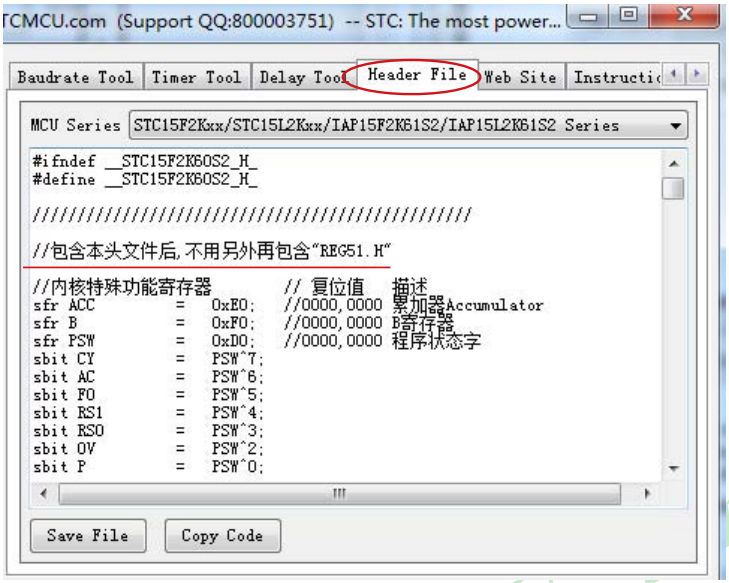

There are many versions of Keil C51 development environment. But Keil µVision2 and Keil µVision3 and Keil µVision4 are the most common ones for 8051 MCU. Now let us introduce how to develop, compile and debug uer program by Keil µVision2 and Keil µVision3 and Keil µVision4

If need to add STC MCU into database of Keil µVision2 or Keil µVision3 or Keil µVision4, you may be do as below:

(1) Open the newest version of STC-ISP Programmer/Writer — STC-ISP-V6.85, and choose the page "Keil ICD Settings", and then click the button "Add MCU type to Keil".

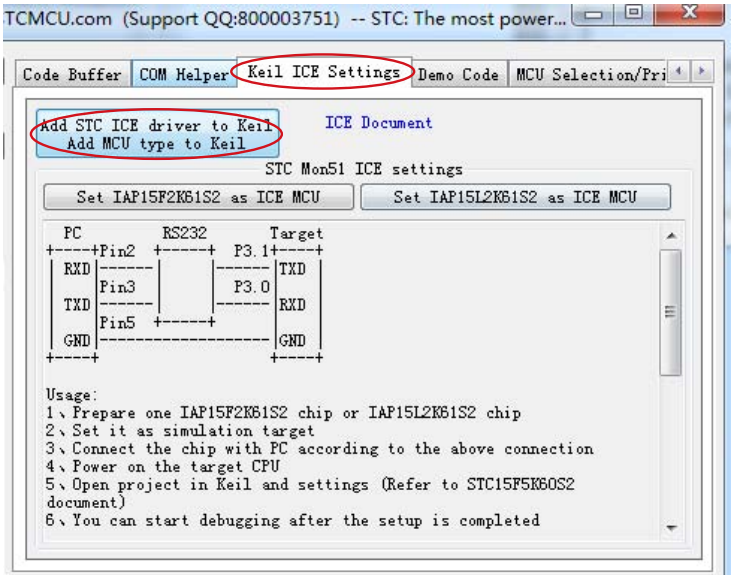

(2) Next location at the Keil setup directory(eg.“C:\Keil\”), press “OK”.

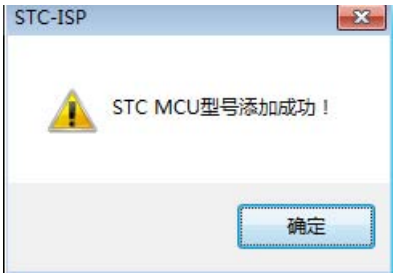

Now let us take Keil µVision4 for example to introduce how to develop, compile and debug uer program

(1) Start up Keil µVision4, the edit interface of Keil µVision4 is shown below.

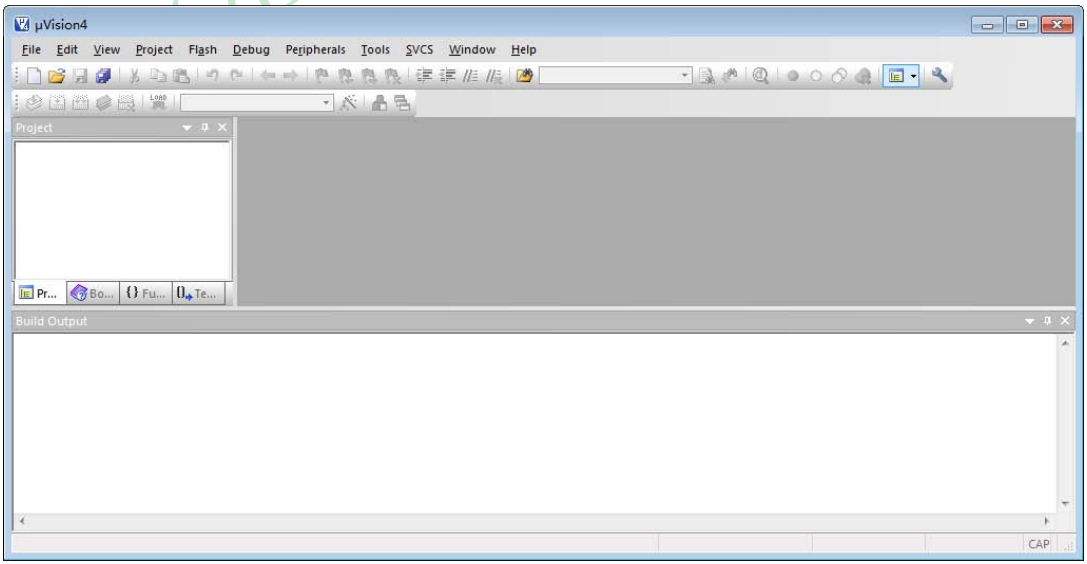

(2) Creat a new project: click the memu【Project】, choose "New Project" in the drop-down boxes.

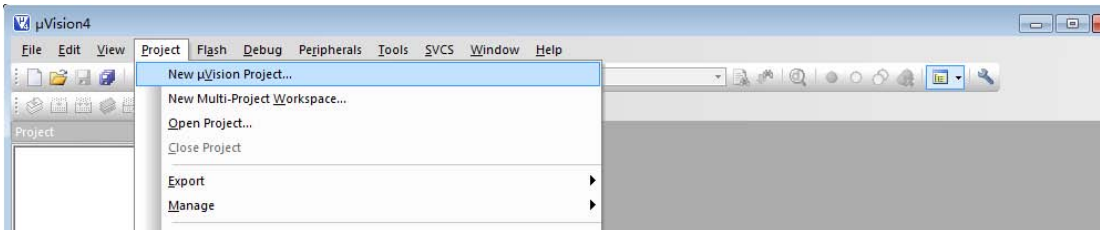

(3) Save the new project. For example, save the project into C:\Users\THINK\Documents\STC MCU, project name is "t1". The default extension name for a **Keil µVision2 project file is .uv2**

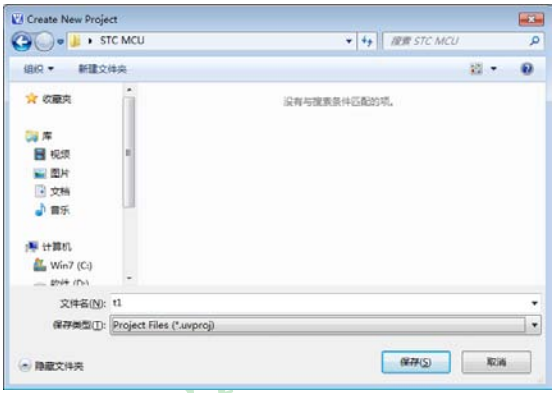

(4) After save the new project, the dialog "Select Device for Target" will be popup, shown below. users can select MCU type in "Data base" listing. STC MCU choose Intel 80/87C58.

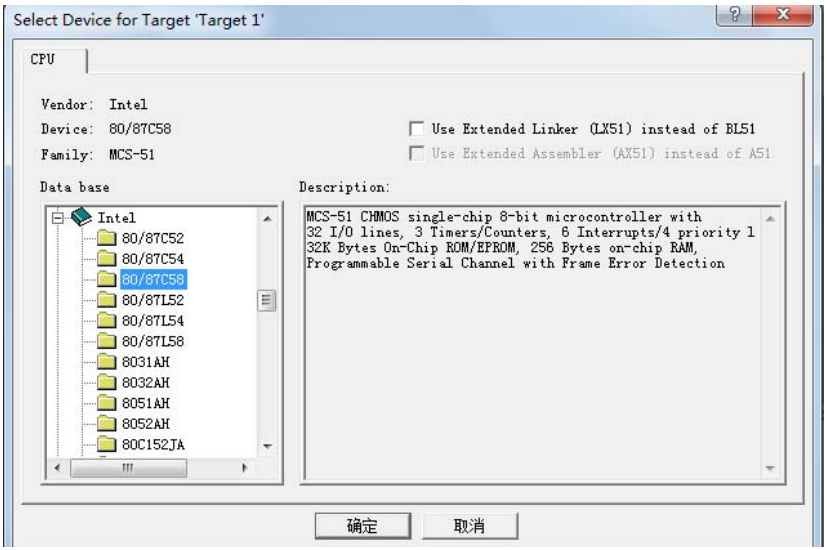

Limited.

(5) After select MCU type, Keil uVision 2 will ask whether copy standard 8051 startup code (STARTUP.51) to project folder and add file to project or not. In general conditions, click 【No】.

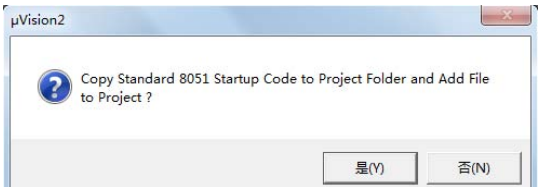

(6) Start to write a program after finish creating project, click【New】option in【File】memu. See the following figure

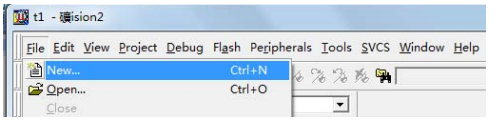

The interface after creating a new file is shown below.

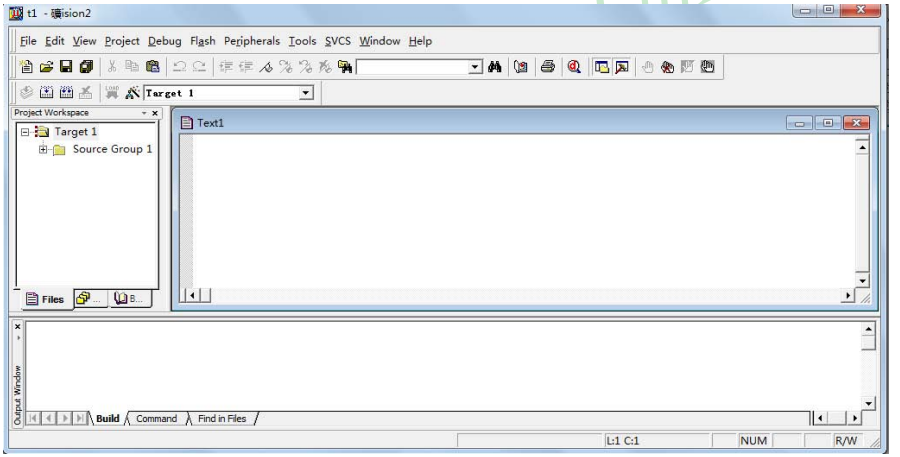

click【Save as】option in【File】memu could save the new file. When saving, the file extension also need to key in. The extension name for C program file is .C and for assmbly file is .ASM (case insensitive).

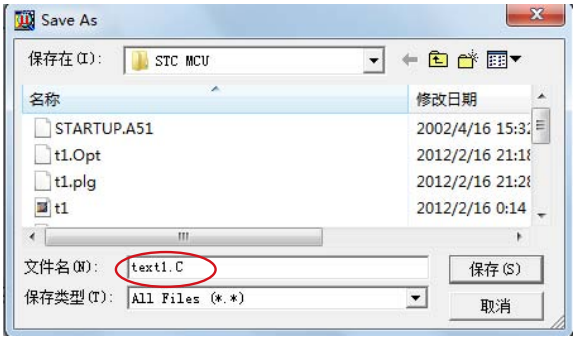

(7) Add application program to project: click the "+" in front of "Target 1" , and then Right-click "Source Group 1", popup memu as follows.

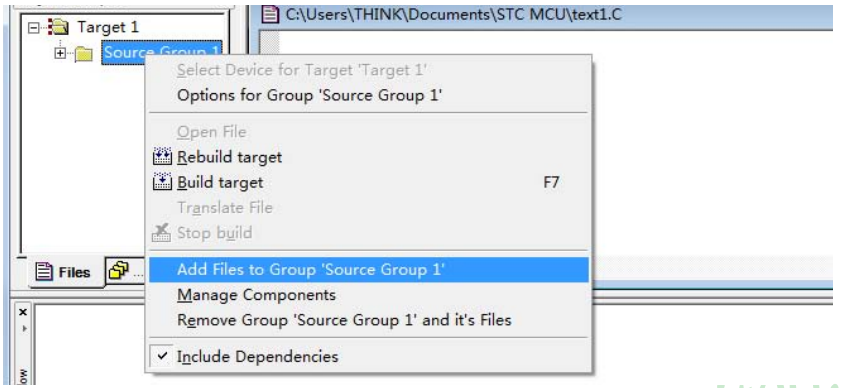

Click "Add File to Group 'Source Group 1' ", then poppu the following dialog.

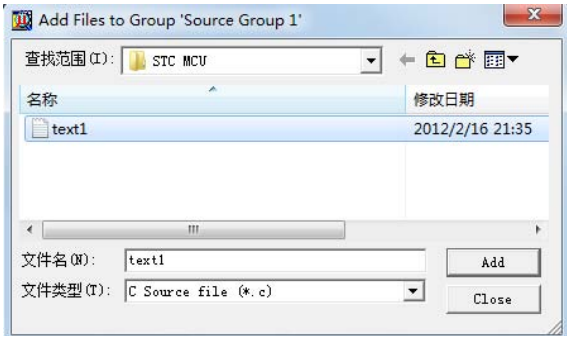

Choose file "text1.c" (example), click the "Add" to finish adding application program to project.

(8) Environment Settings: Right-click "Target 1" and choose " Options for Target 'Target1' " in pull-down menu or Project→ Options for Target 'Target1', "Options for Target 'Target1' " dialog will be popup

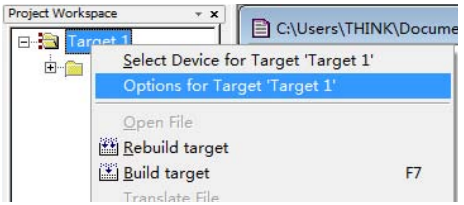

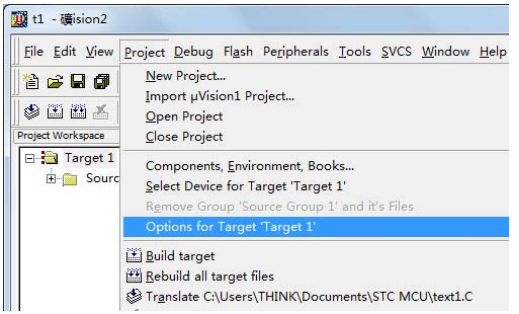

Limited.

"Options for Target 'Target1' " dialog

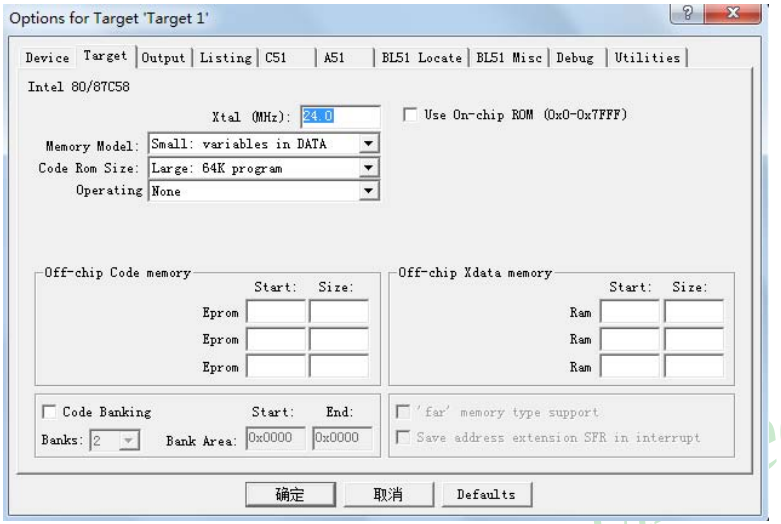

The dialog of "Options for Target 'Target1' " have several options, such as "Device" selection, "Target" attribute, "Output" attribute, "C51" compiler attribute, "A51" compiler attribute, "BL51" linker attribute, "Debug" attribute and so on. These options except the following ones generally do not be set by users.

① Data memory model setting

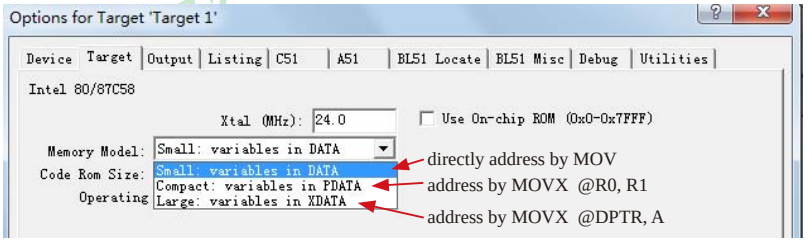

② Start and End address of program area is defaulted from 0x0000 to 0xFFFF, shown as following figure. The default start and end address is correct.

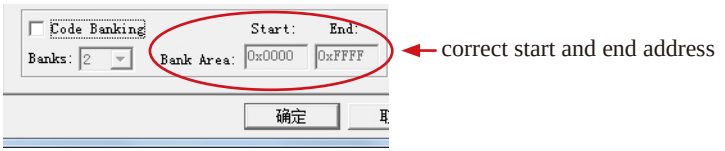

However, the following start and end address is illegal, it must be corrected.

The steps of correcting the start and end address is shown below: check “Code Banking” firstly and then revise the start and end address in “Bank Area”. Last, remove the tick of “Code Banking”

③ Automatically create HEX file when compiling and linking. Click "Ouput" and choose "Create HEX File" with a tick, see the following figure.

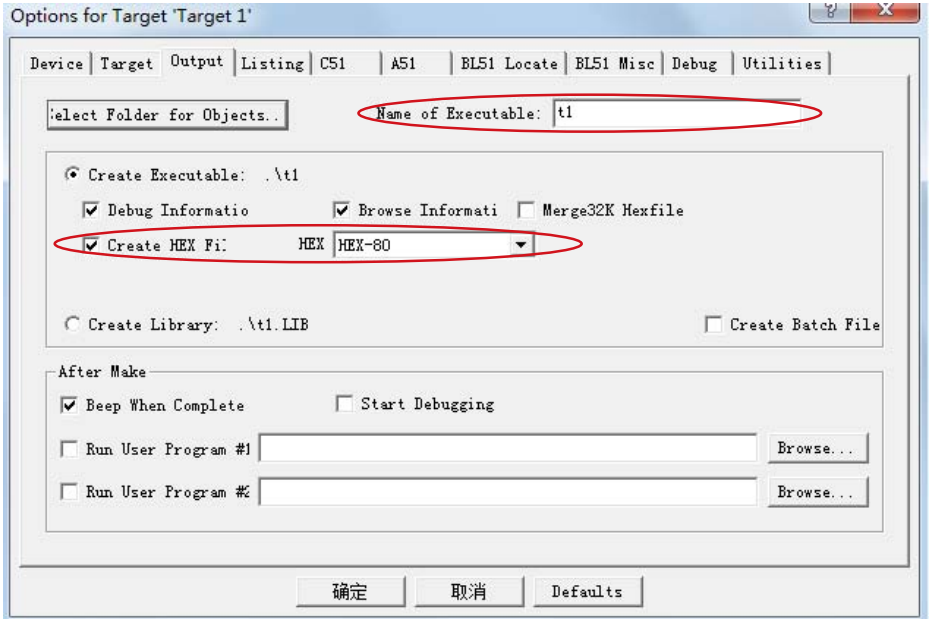

16.2 USB Download Tool On-Line / Off-Line —— U8/U8-Mini

U8/U8-Mini is a download tool supporting burning program either on-line or off-line. It can apply to these series MCUs as below：

STC15F2K60S2/STC15L2K60S2 series
STC15F408AD/STC15L408AD series
STC15W201S series
STC15F104W/STC15L104W series
STC15F104E/STC15L104E
STC15F204EA/STC15L204EA
STC10Fxx/STC10Lxx series
STC11Fxx/STC11Lxx series
STC12C5Axx/STC12LE5Axx series
STC12C52xx/STC12LE52xx series
STC12C56xx/STC12LE56xx series
STC12C54xx/STC12LE54xx series
STC12Cx052/ STC12Cx052AD/STC12LEx052/STC12LEx052AD series
STC90xx/STC89xx series

MCU Limited.

The physical map of U8 and U8-Mini are shown in below：

U8 Front View

U8 Back View

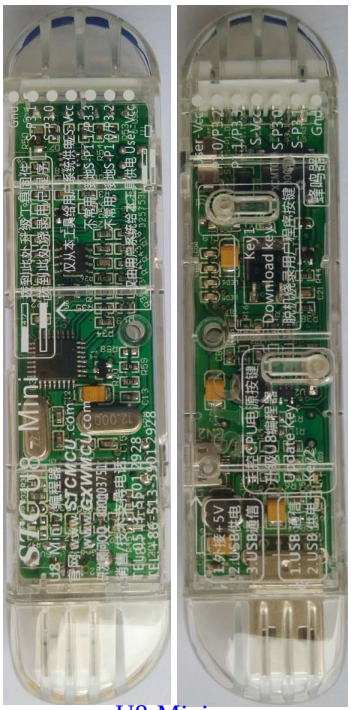

U8-Mini

Additional uses of some lines introduced below with U8 or U8-Mini：

（1）USB Line：

（2）Lines connecting U8/U8-Mini and user system：

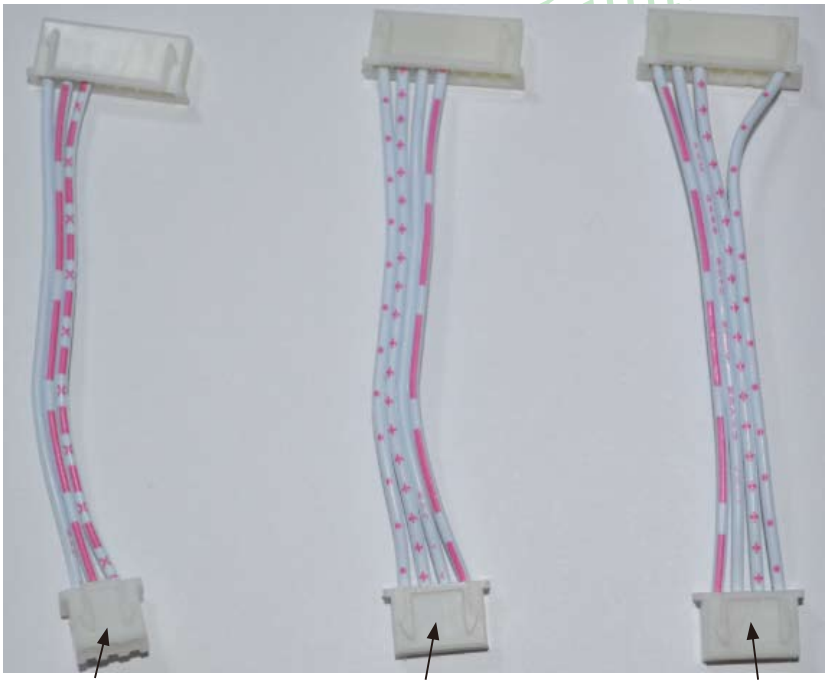

The line will need that U8 's and user system' power are independent

The line will use U8 to power the user system

The line will use the user system to power the U8

16.2.1 Introduce the Main Modules of U8 (RMB 100 yuan)

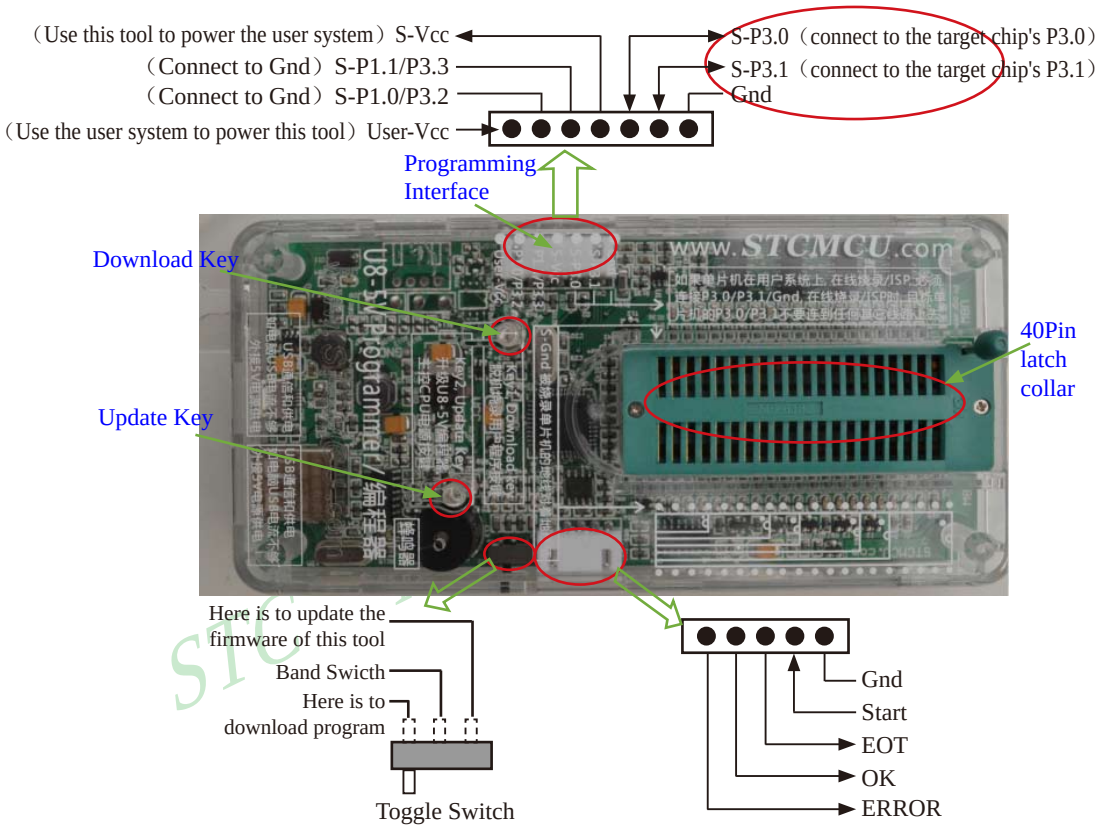

Programming Interface：used different lines to connect U8 tool to user system according different power supply mode.

Update Key：used to update U8 firmware. press the key and put the toggle switch to the "update the firmware of this tool" could update the program of the main control chip of U8 if needed to update.

16.2.2 Install the Driver of U8 Tool

Setp 1: Download the newest driver of U8 in the STC website or the newest STC-ISP.exe as shown in below.

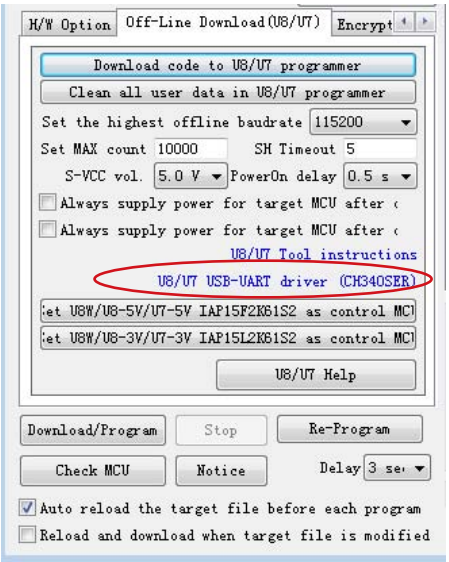

The dirvier link is U7编程器USB转串口驱动（http://www.stcmcu.com/STCISP/CH341SER.exe）

Setp2: Double-click it to run the driver after downloaded successfully to your PC. The following interface will be showed. And then, click the button "install" to instal the driver automatically

That means the driver of U8 has been installed correctly if the right interface is showed

Setp3: Use USB lines to connect U8 baord to PC, and find the USB-SERIAL CH340 (COMx) in the device manager of PC, see the following figure. please remember the COMx which is different for each computer.

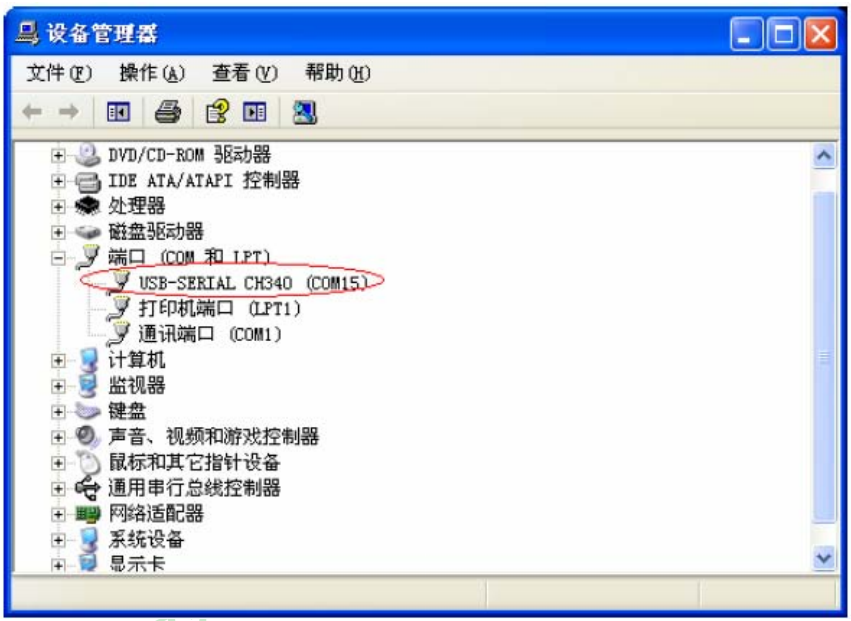

Setp4: open the STC-ISP.exe to download program to the target chip in latch collar of U8 tool. please choose the same COM port in STC-ISP.exe as the COMx which finded in the device manager of PC above. Just as the following figure:

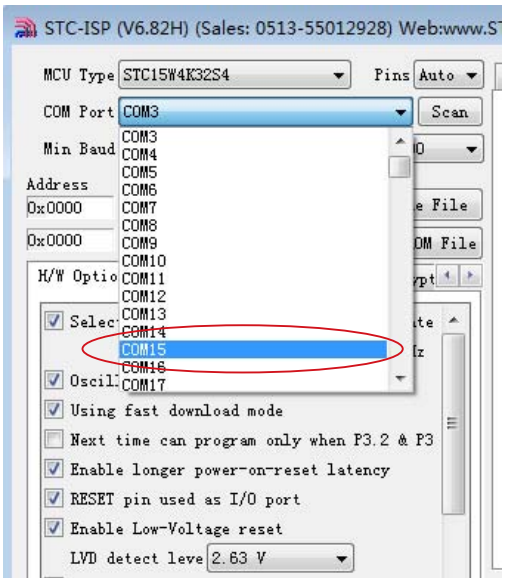

16.3 ISP Programmer / Burner

STC has Special STC-ISP cheap programming tools

STC-ISP programming tools are classified as follow

- STC-ISP Programming Tools
  - STC12/11/10/89/90 series ISP programming tools
    - STC12/11/10/89/90 series 40-pin MCU special ISP Programming tool
    - STC12/11/10/89/90 series 32-pin MCU special ISP Programming tool
    - STC12/11/10/89/90 series 28-pin MCU special ISP Programming tool
    - STC12/11/10/89/90 series 20-pin MCU special ISP Programming tool
    - STC12/11/10/89/90 series 18-pin MCU special ISP Programming tool
    - STC12/11/10/89/90 series 16-pin MCU special ISP Programming tool
  - STC15 series ISP programming tool

16.3.1 In-System-Programming (ISP) principle

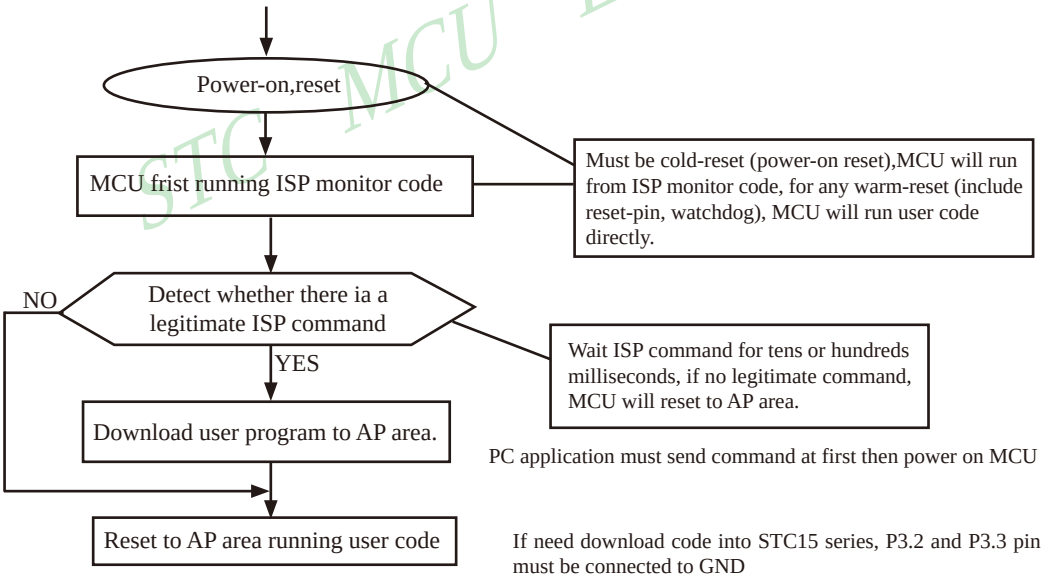

PC application must send command at first then power on MCU

If need download code into STC15 series, P3.2 and P3.3 pin must be connected to GND

If you chose the "Next program code, P3.2/P3.3 need=0/0" option, then the next time you need to re-download the program, first of all must be connected P3.2 and P3.3 to GND

STC MCU Limited.

16.3.2 Application Circuit Diagram for ISP of STC15 series MCU

16.3.2.1 Application Circuit Diagram for ISP using RS-232 Converter

Note：P0 ports can be multiplexed as Address/Data bus，not as A/D Converter. 8 channels of A/D Converter are on P1.

Consequently：P0.x/ADx means that P0.x can be used as Address/Data bus, while P1.x/ADCx means P1.x can be used as A/D conversion channel in the pin map.

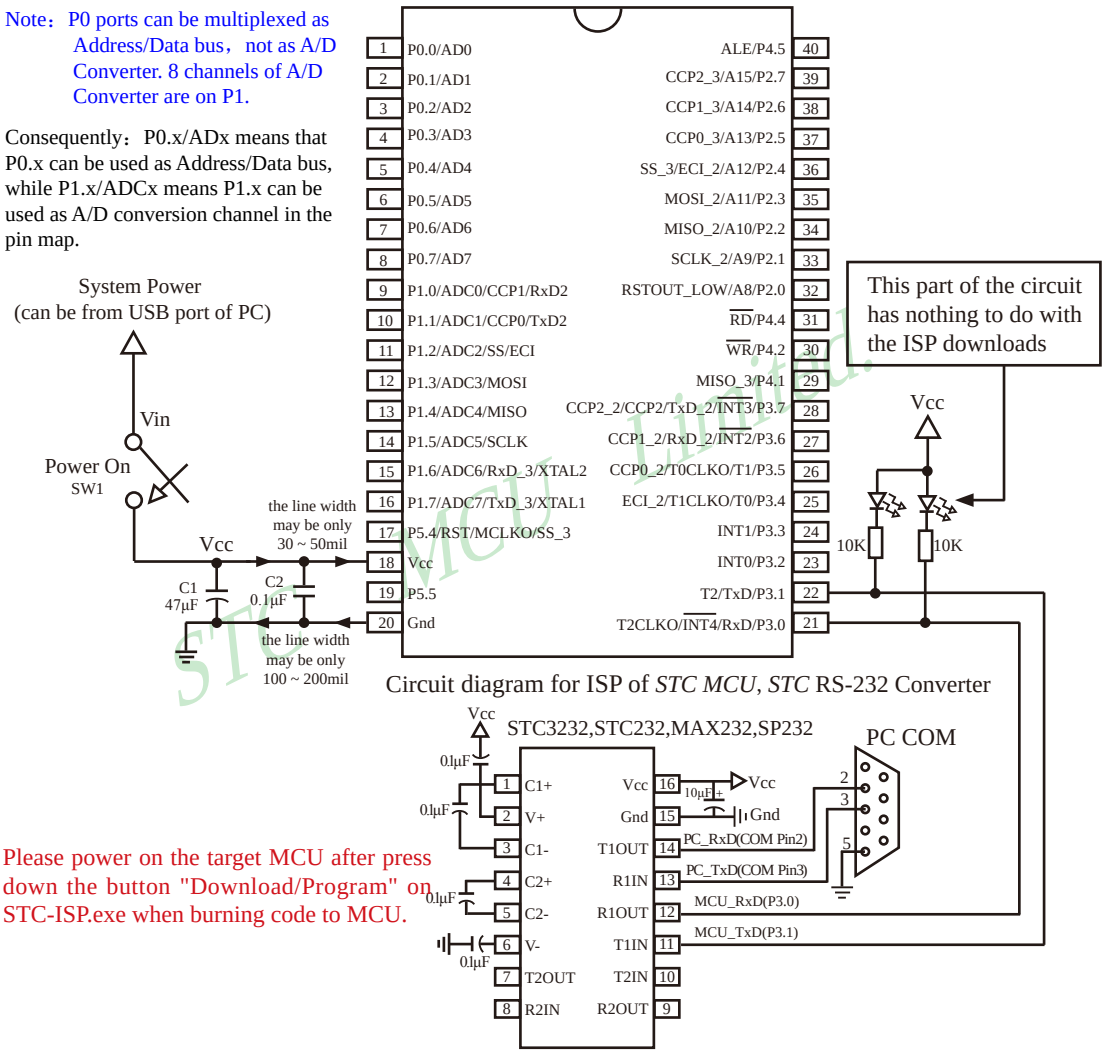

Please power on the target MCU after press down the button "Download/Program" on STC-ISP.exe when burning code to MCU.

Internal hghly reliable Reset. External reset circuit can be completely removed, which also can be used .

P5.4/RST/MCLKO pin factory defaults to the I/O port, which can be set as RST reset pin(active high) through the STC-ISP programmer.

Internal high-precise R/C clock(±3%), ±1% temperature drift (-40℃~+85℃) while ±0.6% in normal temperature (-20℃~+65℃) . External expensive crysal can be completely removed, which also can be used.

Recommend to add decoupling capacitor C1(47μF) and C2(0.1μF) between Vcc and Gnd that can remove power noise and improve the anti-interference ability.

Users in their target system, such as the P3.0/P3.1 through the RS-232 level shifter connected to the computer after the conversion of ordinary RS-232 serial port to connect the system programming / upgrading client software. If the user panel recommended no RS-232 level converter, should lead to a socket, with Gnd/P3.1/P3.0/Vcc four signal lines, so that the user system can be programmed directly. Of course, if the six signal lines can lead to Gnd/P3.1/P3.0/Vcc/P1.1/P3.2 as well, because you can download the program by P1.0/P3.3 ISP ban. If you can Gnd/P3.1/P3.0/Vcc/P1.1/P1.0/Reset seven signal lines leads to better, so you can easily use "offline download board (no computer)" .

ISP programming on the Theory and Application Guide to see "STC15 Series MCU Development / Programming Tools Help"section. In addition, we have standardized programming download tool, the user can then program into the goal in the above systems, you can borrow on top of it RS-232 level shifter connected to the computer to download the program used to do. Programming a chip roughly be a few seconds, faster than the ordinary universal programmer much faster, there is no need to buy expensive third-party programmer.
PC STC-ISP software downloaded from the website www.STCMCU.com

STC MCU Limited.

16.3.2.2 Application Circuit Diagram for ISP using USB Chip PL-2303SA to convert Serial

Note：P0 ports can be multiplexed as Address/Data bus，not as A/D Converter. 8 channels of A/D Converter are on P1.

Consequently：P0.x/ADx means that P0.x can be used as Address/Data bus, while P1.x/ADCx means P1.x can be used as A/D conversion channel in the pin map.

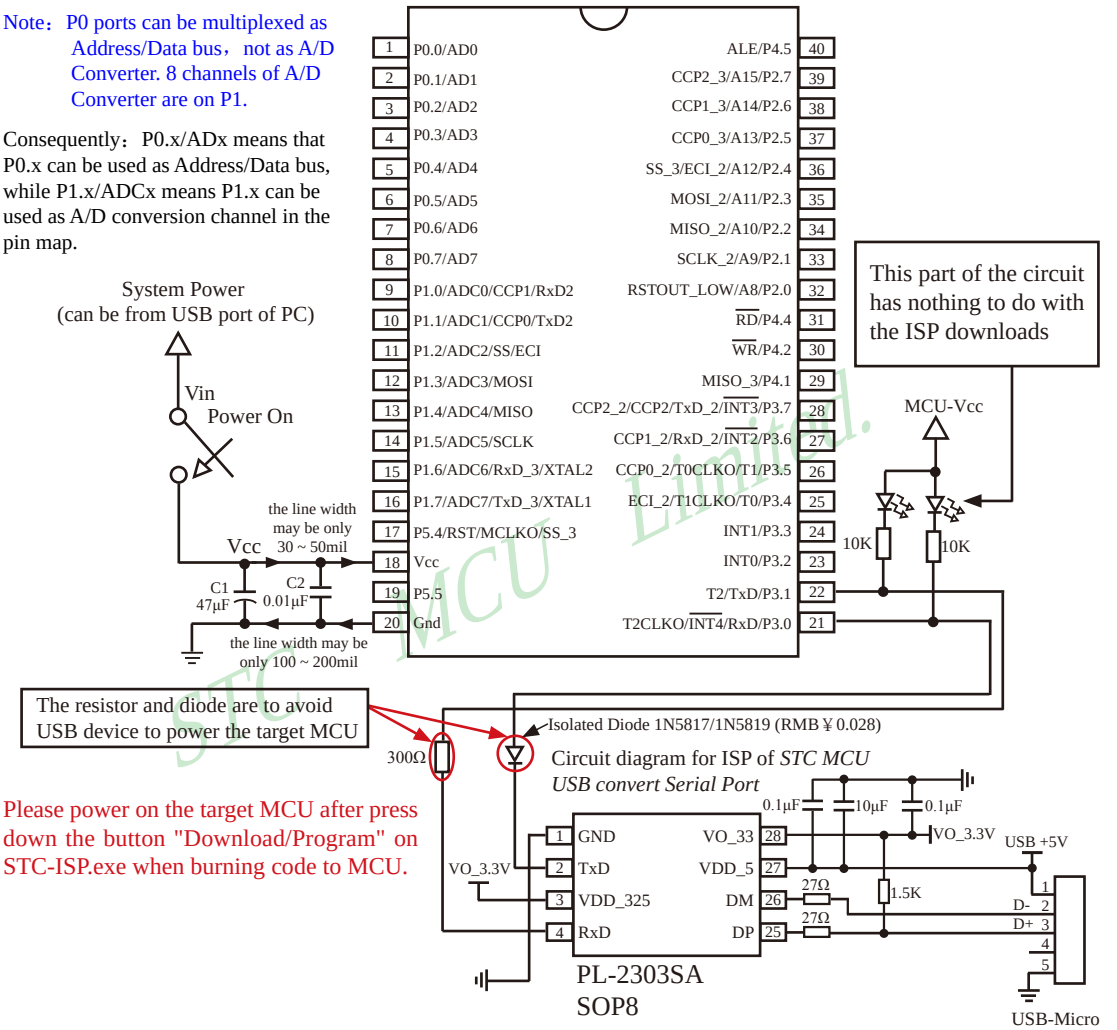

Please power on the target MCU after press down the button "Download/Program" on STC-ISP.exe when burning code to MCU.

Internal hghly reliable Reset. External reset circuit can be completely removed, which also can be used .

P5.4/RST/MCLKO pin factory defaults to the I/O port, which can be set as RST reset pin(active high) through the STC-ISP programmer.

Internal high-precise R/C clock(±3%), ±1% temperature drift (-40℃~+85℃) while ±0.6% in normal temperature (-20℃~+65℃) . External expensive crysal can be completely removed, which also can be used.

Recommend to add decoupling capacitor C1(47μF) and C2(0.1μF) between Vcc and Gnd that can remove power noise and improve the anti-interference ability.

16.3.2.3 Application Circuit Diagram for ISP using USB Chip PL-2303HXD / PL-2303HX to convert Serial Port

Note：P0 ports can be multiplexed as Address/Data bus，not as A/D Converter. 8 channels of A/D Converter are on P1.

Consequently：P0.x/ADx means that P0.x can be used as Address/Data bus, while P1.x/ADCx means P1.x can be used as A/D conversion channel in the pin map.

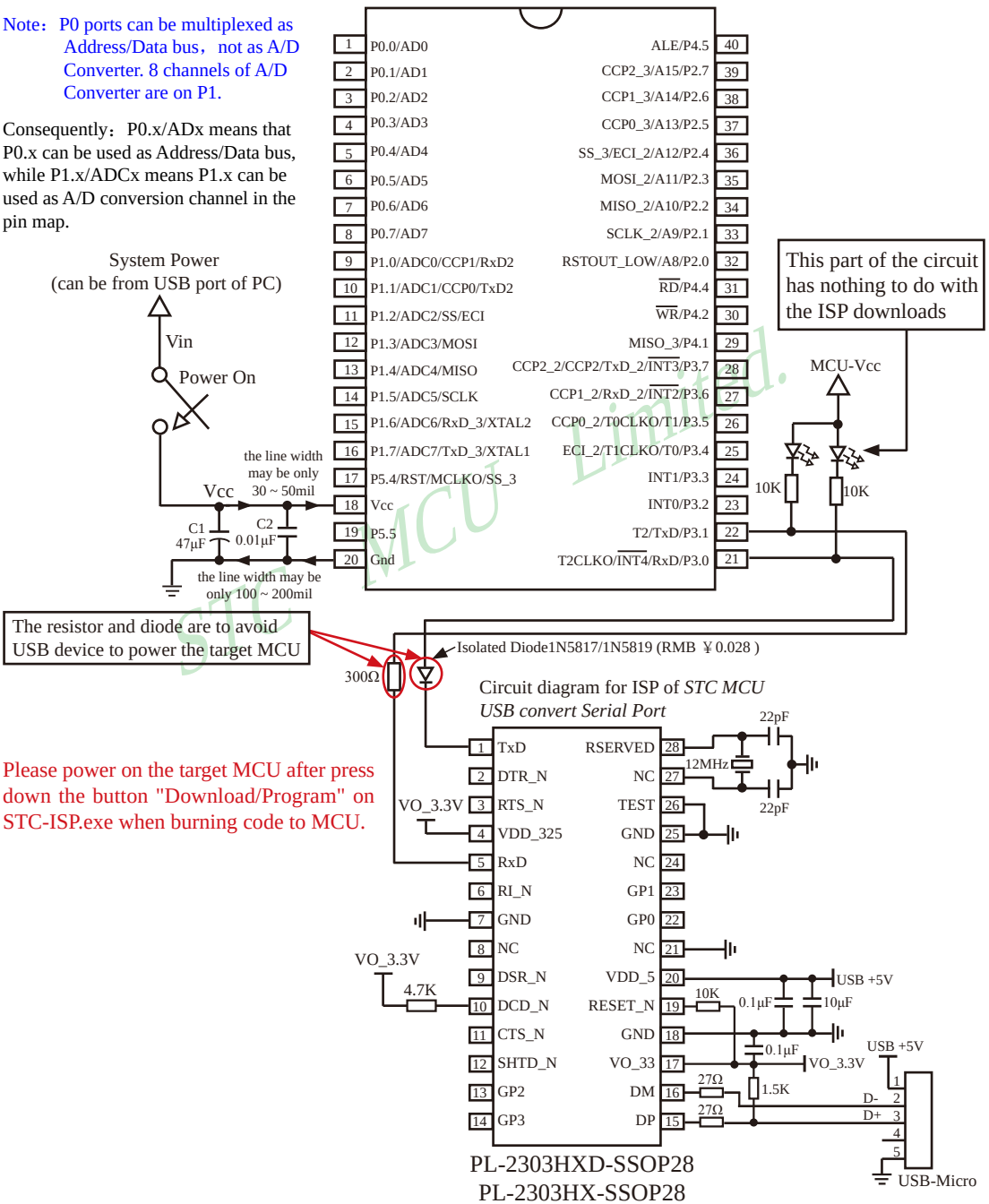

Please power on the target MCU after press down the button "Download/Program" on STC-ISP.exe when burning code to MCU.

STC MCU Limited.

16.3.3 Package Real Diagram of STC MCU

STC12/11/10/89/90 series MCU package diagram:

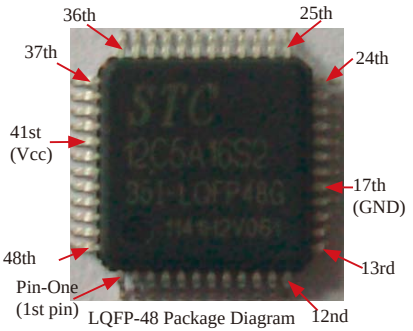

LQFP-48 Package Diagram

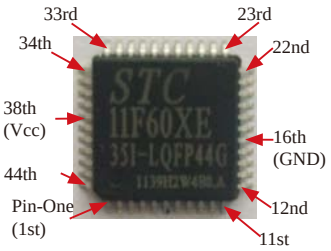

LQFP-44 Package Diagram

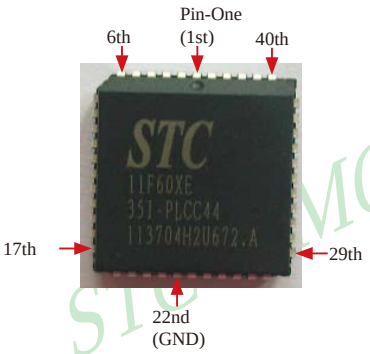

PLCC-44 Package Diagram

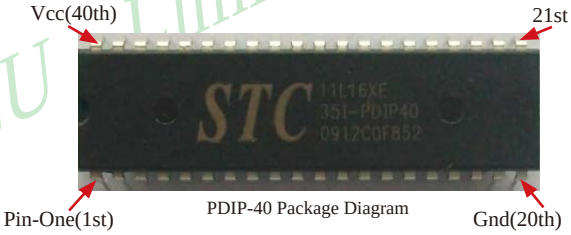

PDIP-40 Package Diagram

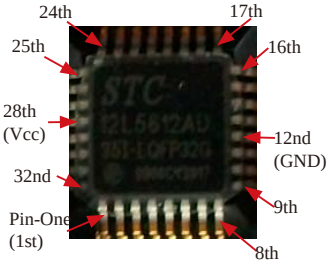

LQFP-32 Package Diagram

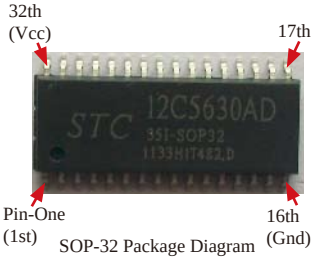

SOP-32 Package Diagram

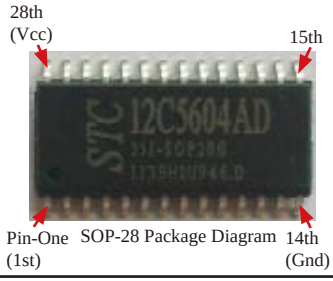

SOP-28 Package Diagram

SKDIP-28
Package Diagram

STC MCU Limited.

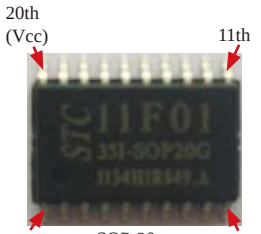

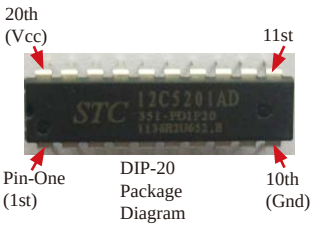

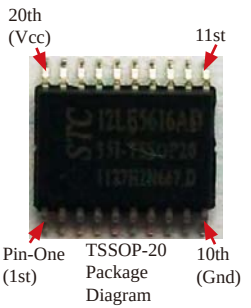

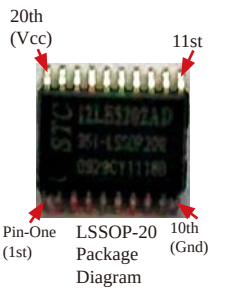

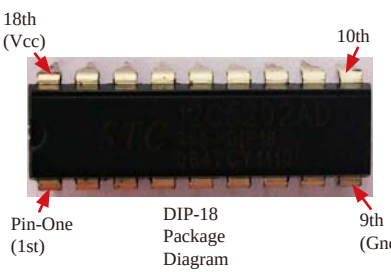

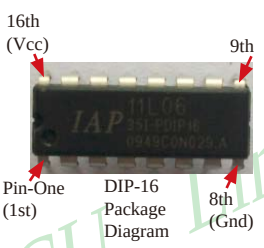

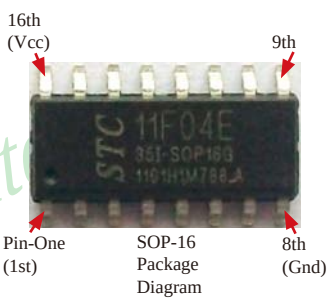

STC15 series MCU package diagram:

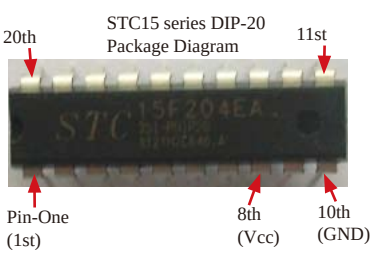

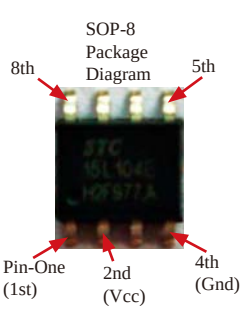

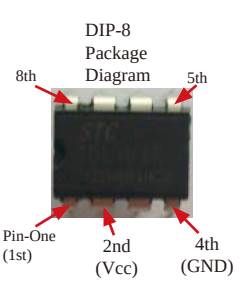

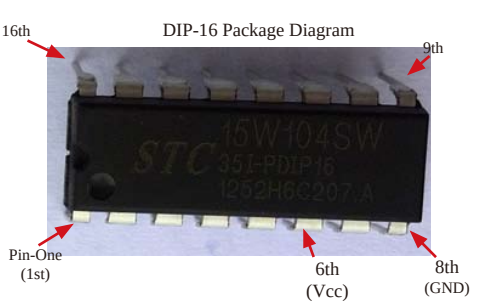

STC15 series SOP28 Package Diagram

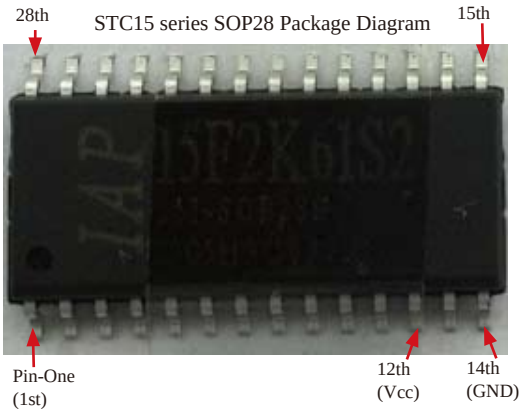

STC15 series PDIP40 Package Diagram

STC15 series LQFP44 Package Diagram

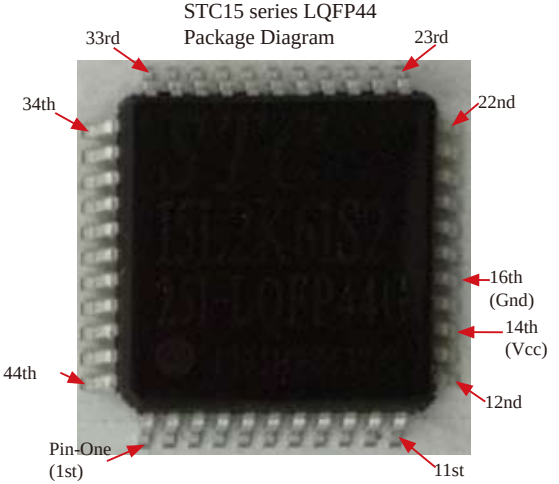

16.3.4 Hardware of STC-ISP Programming Tools

16.3.4.1 Real Show of STC-ISP Program Board

STC15F104E/STC15F204EA series MCU special ISP programming tools

STC MCU Limited.

Layout of STC15 series special ISP programming tools:

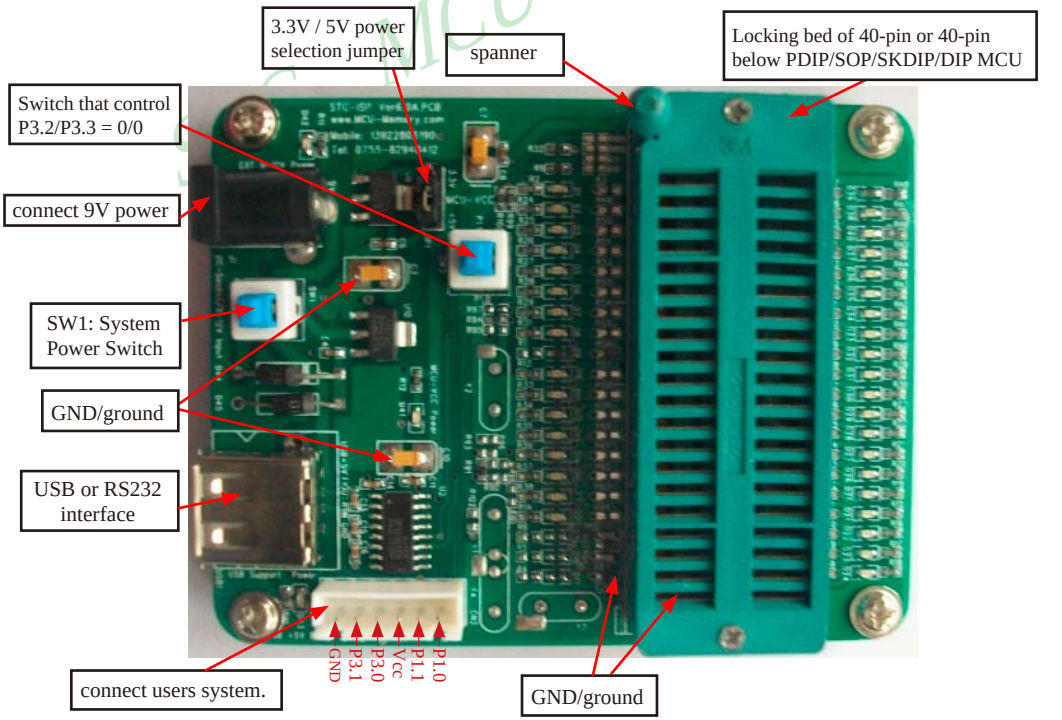

Microcontroller can be mounted to STC-ISP programming tool according the following figure.

Installation of STC15 series SKDIP-28 MCU

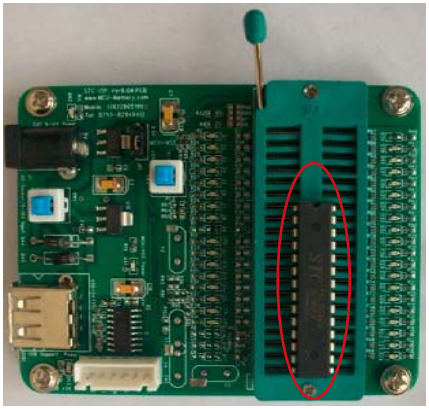

Installation of STC15 series DIP-8 MCU

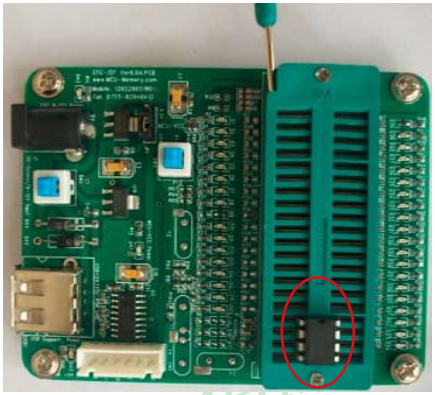

STC MCU Limited

16.3.4.2 How to Utilize Transition Socket to install SMD onto STC-ISP Program Board

Only can PDIP package of 40-pin or below MCU be installed onto STC-ISP program board. For Surface Mount Devices (SMD), such as LQFP, PLCC, SOP and so on, transition sockets must be needed to install them onto STC-ISP program board. All kind of transition sockets are listed in below, for you learn.

Transition Socket of LQFP48(front)

Transition Socket of LQFP48(inside)

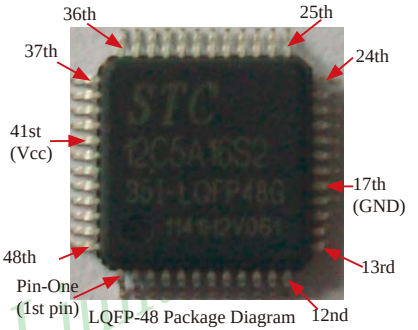

LQFP-48 Package Diagram

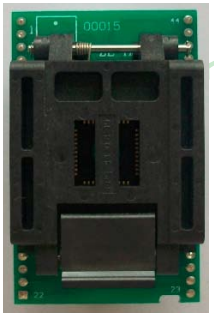

Transition Socket of LQFP44(front)

Transition Socket of LQFP44(inside)

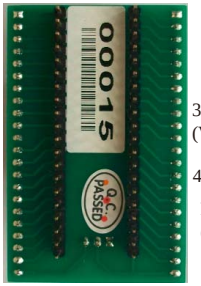

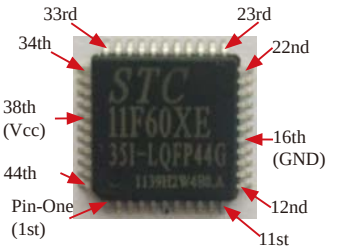

LQFP-44 Package Diagram

Transition Socket of LQFP44(back)

Transition Socket of PLCC44(front)

Transition Socket of PLCC44(back)

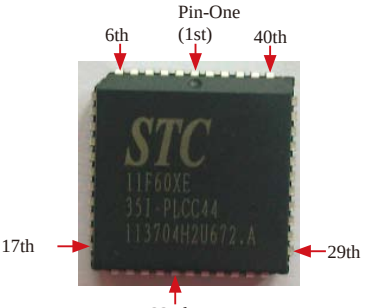

PLCC-44 Package Diagram

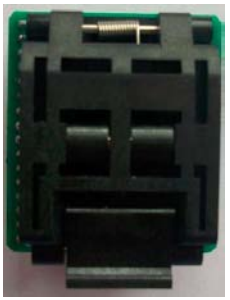

Transition Socket of LQFP32(front)

Transition Socket of LQFP32(inside)

Transition Socket of LQFP32(back)

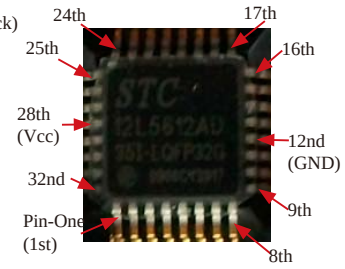

LQFP-32 Package Diagram

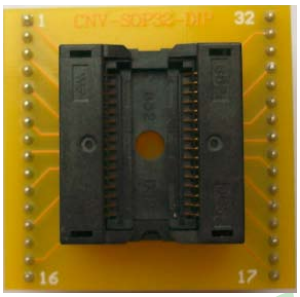

Transition Socket of SOP32(front)

Transition Socket of SOP32(back)

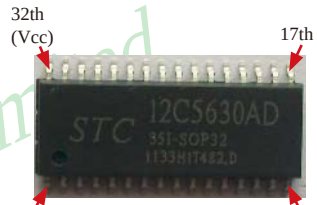

SOP-32 Package Diagram

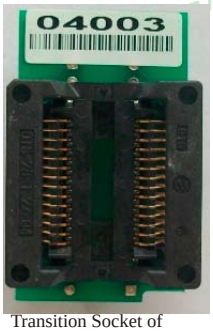

Transition Socket of SOP28 or SOP20(front)

Transition Socket of SOP28 or SOP20(back)

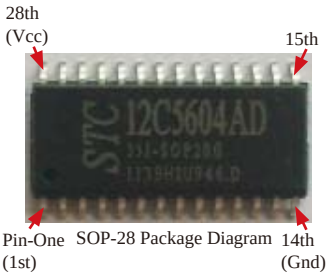

SOP-28 Package Diagram

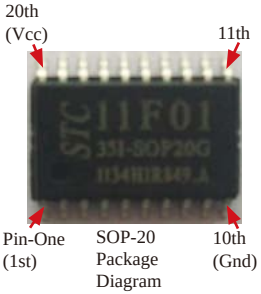

SOP-20 Package Diagram

Transition Socket of SOP16 or SOP8(front)

Transition Socket of SOP16 or SOP8(back)

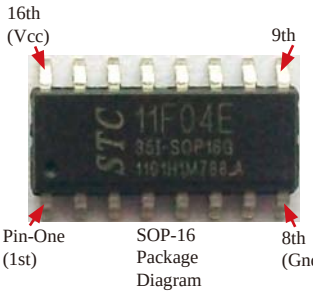

SOP-16 Package Diagram

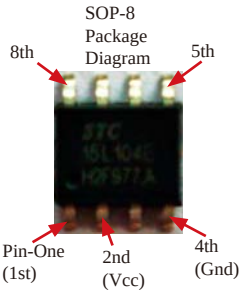

Installation Diagrams of LQFP-48/LQFP-44/LQFP-32 MCU are shown below.

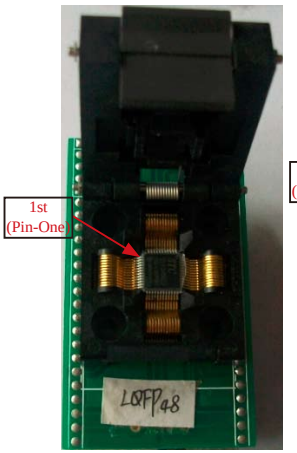

Transition Socket of LQFP48(inside)

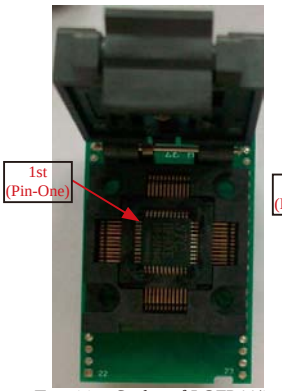

Transition Socket of LQFP44(inside)

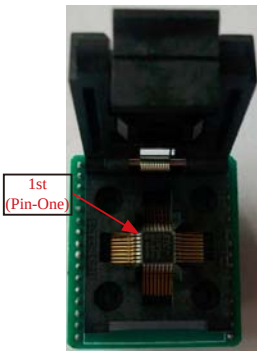

Transition Socket of LQFP32(inside)

STC MCU Limited.

Installation Diagram of PLCC-44 MCU is shown below.

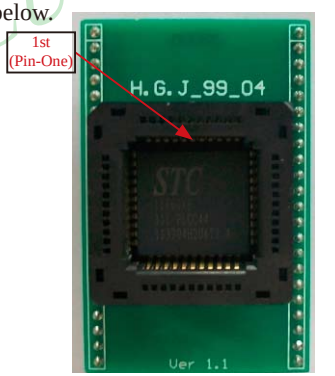

Transition Socket of PLCC44(front)

Installation Diagram of SOP-32 and SOP-28/20 and SOP-16/8 MCU is shown below.

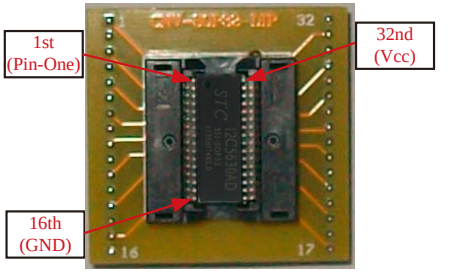

Transition Socket of SOP32(front)

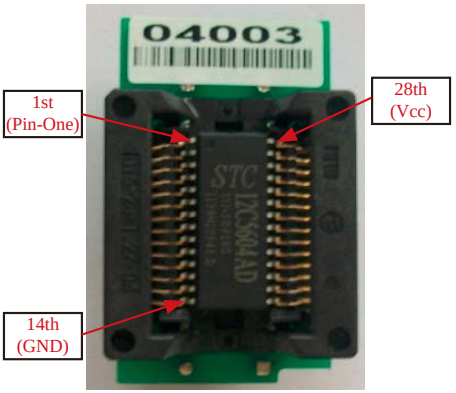

Transition Socket of SOP28(front)

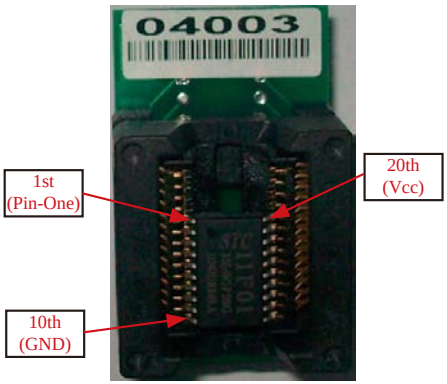

Transition Socket of SOP20(front)

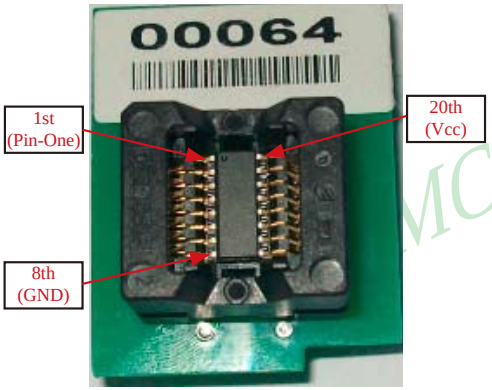

Transition Socket of SOP16(front)

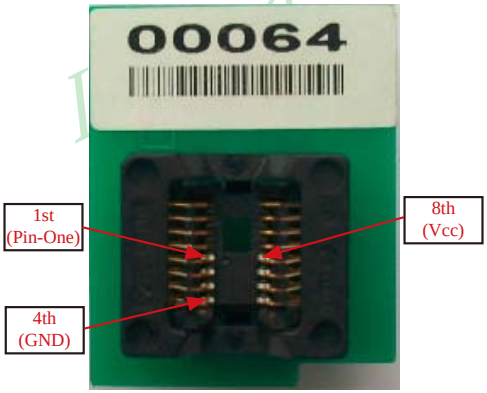

Transition Socket of SOP8(front)

Install transition socket of LQFP-48/LQFP-44 onto STC-ISP program board

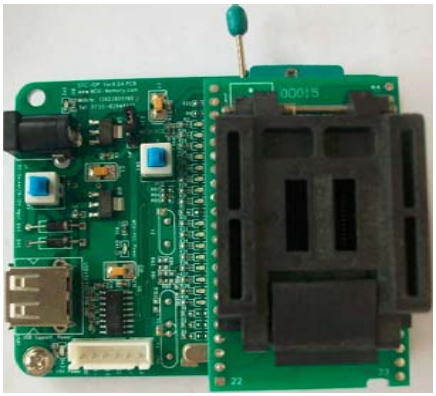

Install transition socket of PLCC-44 onto STC-ISP program board

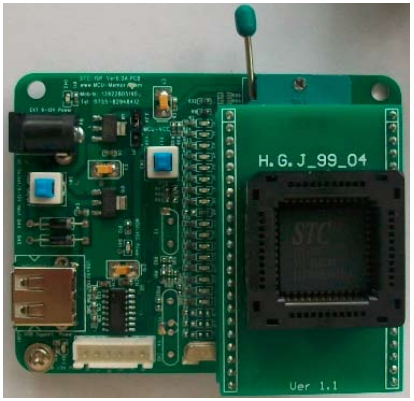

Install transition socket of LQFP-32 onto STC-ISP program board

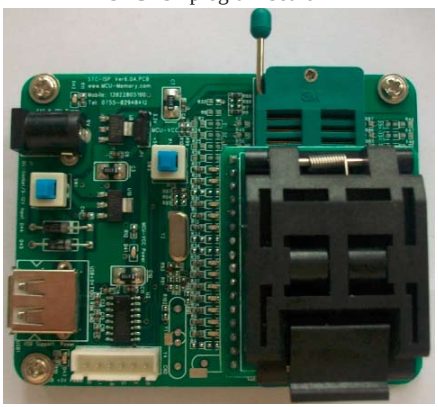

Install transition socket of SOP-32 onto STC-ISP program board

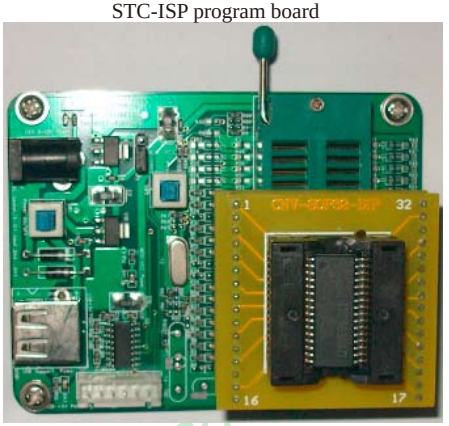

Install transition socket of SOP-28 onto STC-ISP program board

Install transition socket of SOP-16 onto STC-ISP program board

STC MCU Limited.

16.3.5 PC Side Control Software Usage

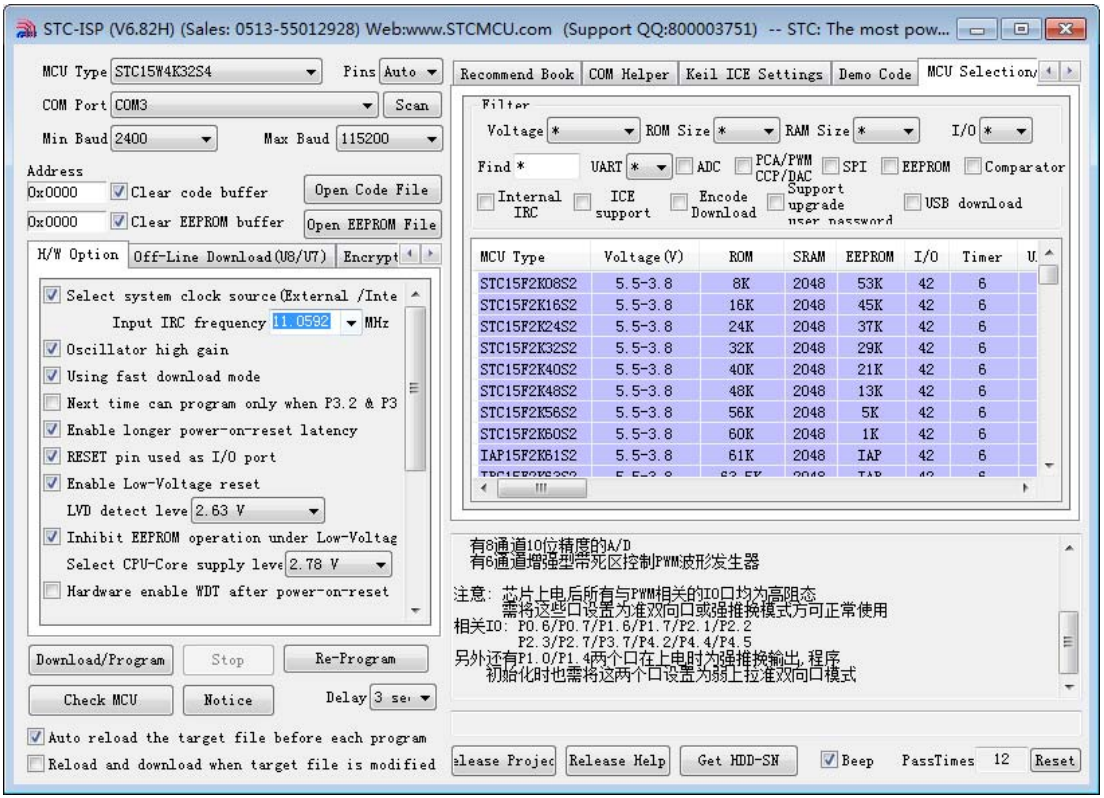

The overview of STC15xx-isp-V6.85 interface is shown above. The STC-ISP software has added many new features, such as scanning COM port, Baudrate tool, Timer tool, Delay tool and so on.

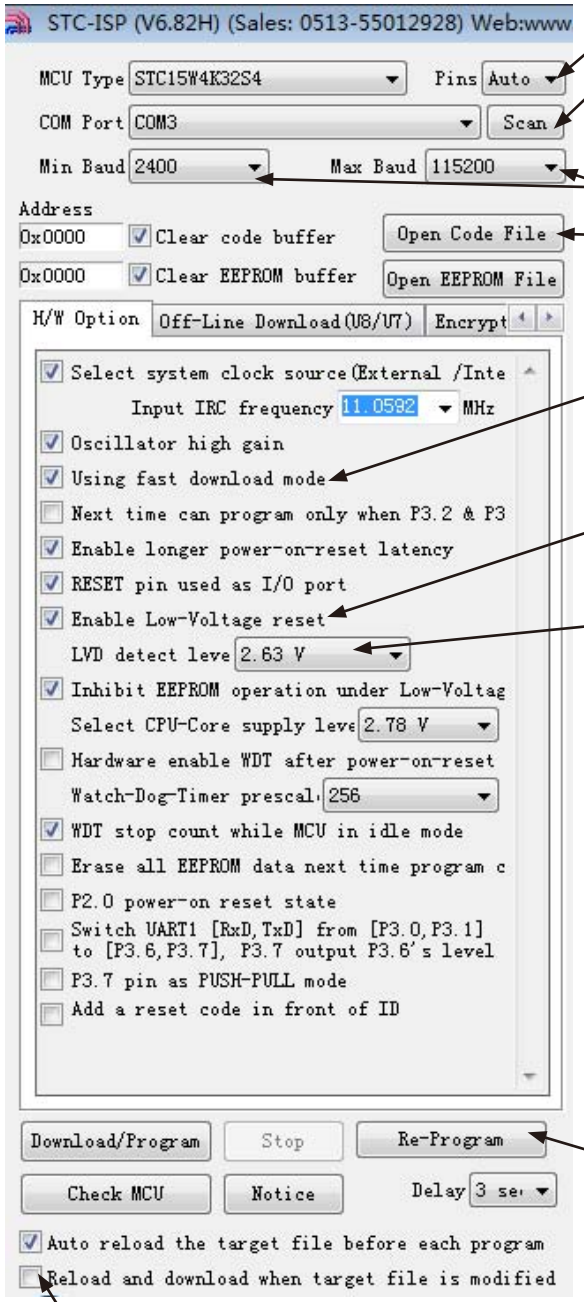

MCU Type Selection

Scan the usable serial port in current system

According to actual situation, the user selects the appropriate maximum baud rate

Open user program code file

Whether to use the faster speed of the internal oscillator frequency for download.
Choice : Use a faster speed of the internal oscillator frequency to download
No-Choice: Use a lower speed of the internal oscillator frequency to download

Enable Low-Voltage reset, controls reset or not while the Low-Voltage event
Choice : Reset while detect a Low-Voltage
No-Choice: Interrupt while detect a Low-Voltage

Low-Voltage Detector Parameter, it adjust the threshold voltage level of the built-in Low-Voltage detector
Recommend: when the oscillator frequency is higher than 20MHz,
For 3V chip, low-voltage detection threshold voltage recommend to choose more than 2.5V
For 5V chip, low-voltage detection threshold voltage recommend to choose more than 4.11V

All new settings are valid in the next power-on.

Press this button when mass production

Enable the option in debugging stage

Limited

Click "Notice / Help " in the interface will show the following dialog.

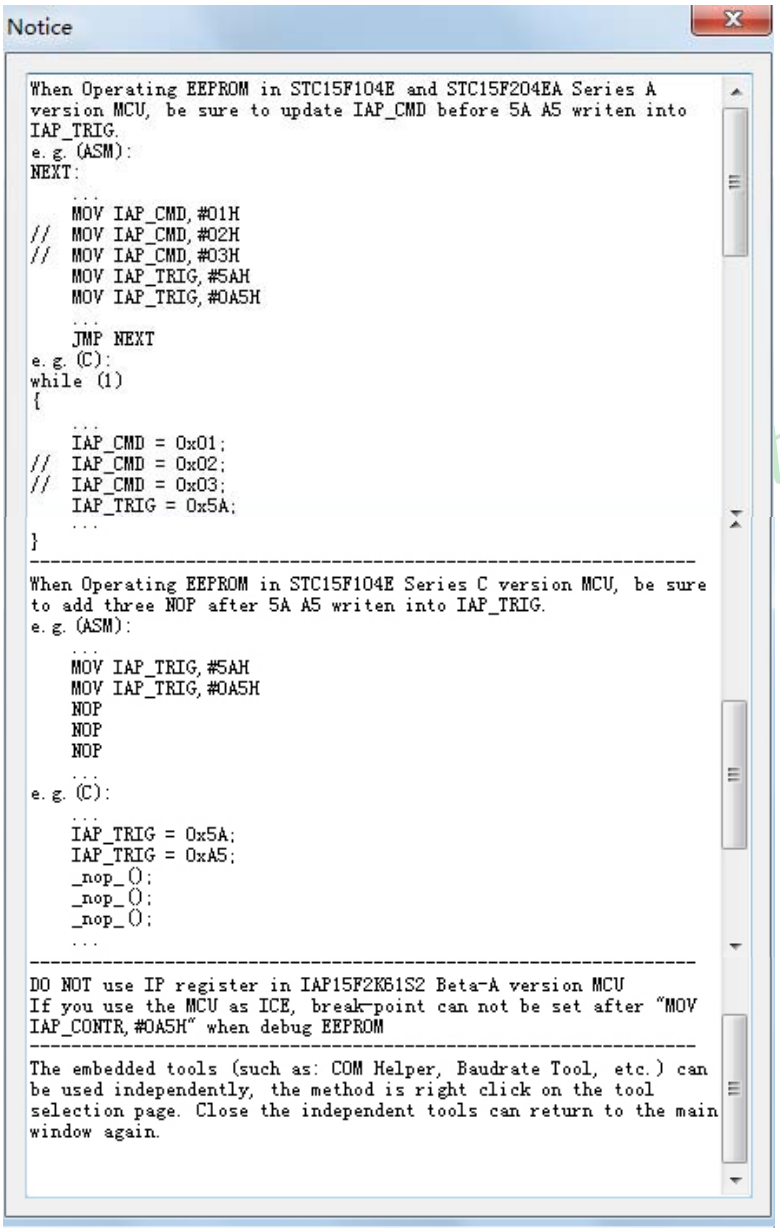

RS485 Control Interface is shown below

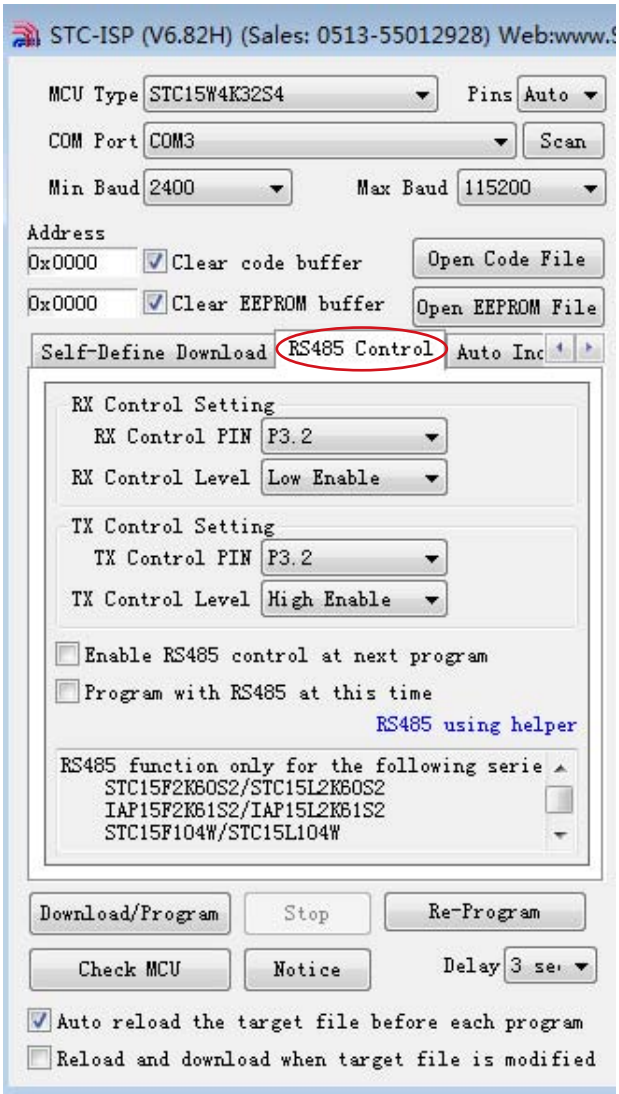

Limited.

COM Helper Interface is shown below

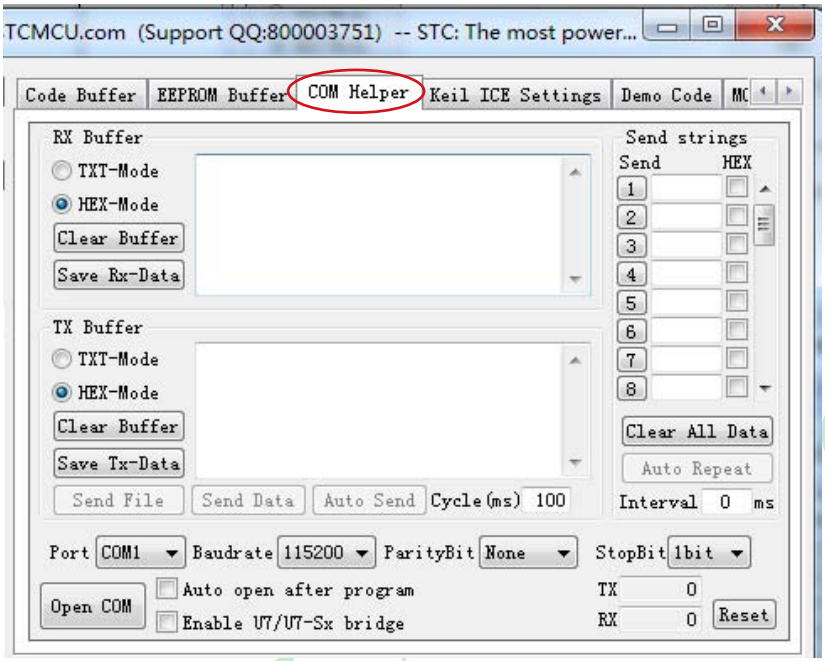

The embedded tools (such as: COM Helper, Baudrate Tool, etc.) can be used independently, the method is right click on the tool selection page. Close the independent tools can return to the main window again.

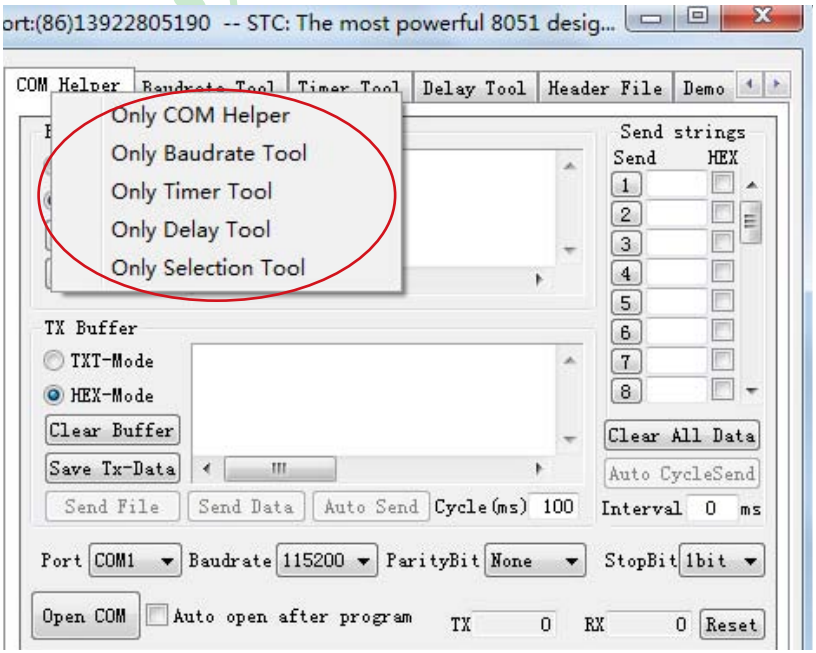

Baudrate tool Interface is shown below

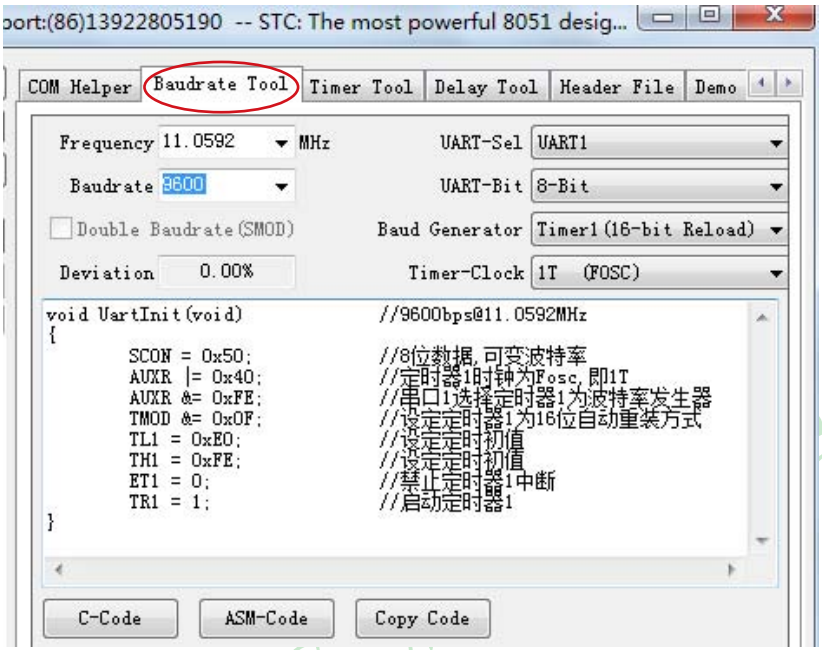

Timer tool Interface is shown below

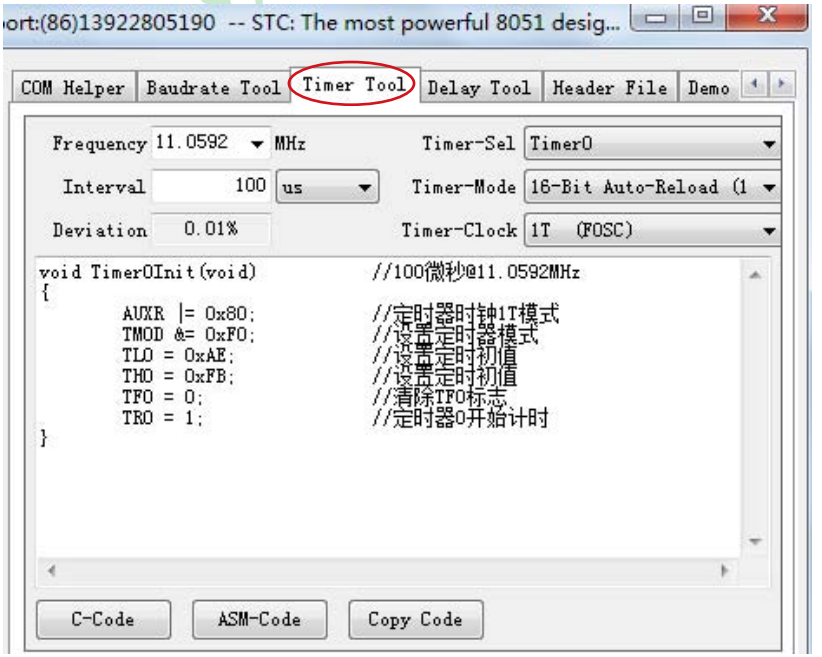

Delay tool Interface is shown below

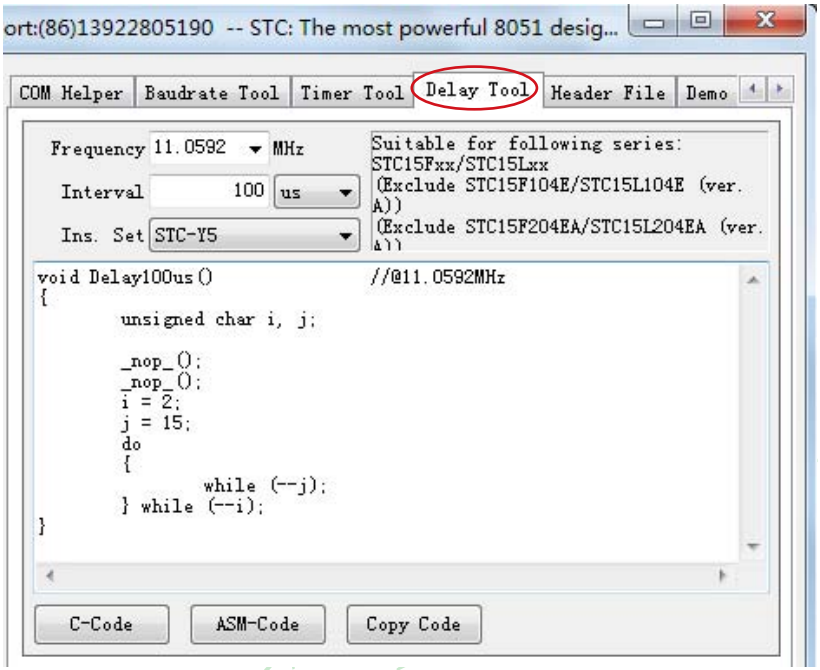

Dialog of Header file is shown below

There is an demo code designed into STC-ISP software.

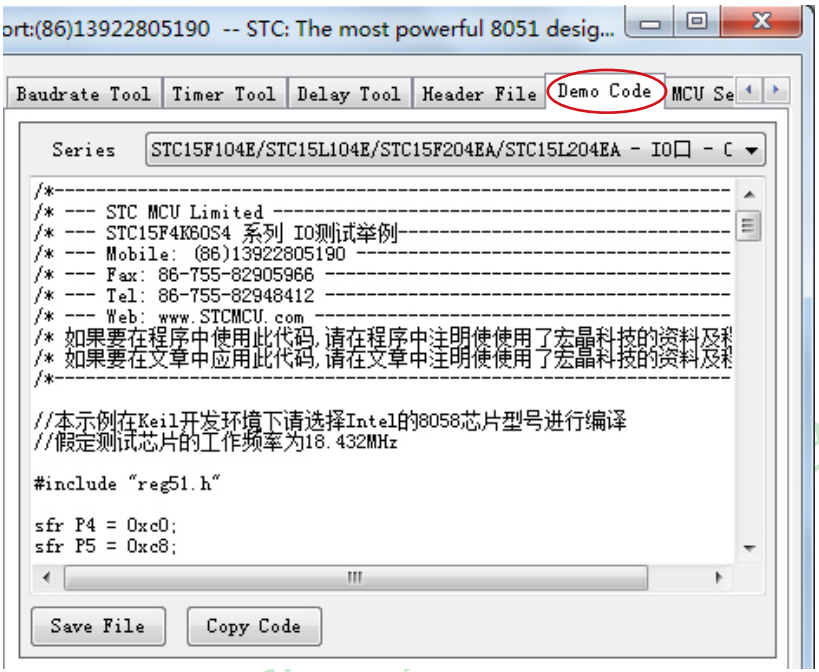

Next dialog shows the STC MCU Selection

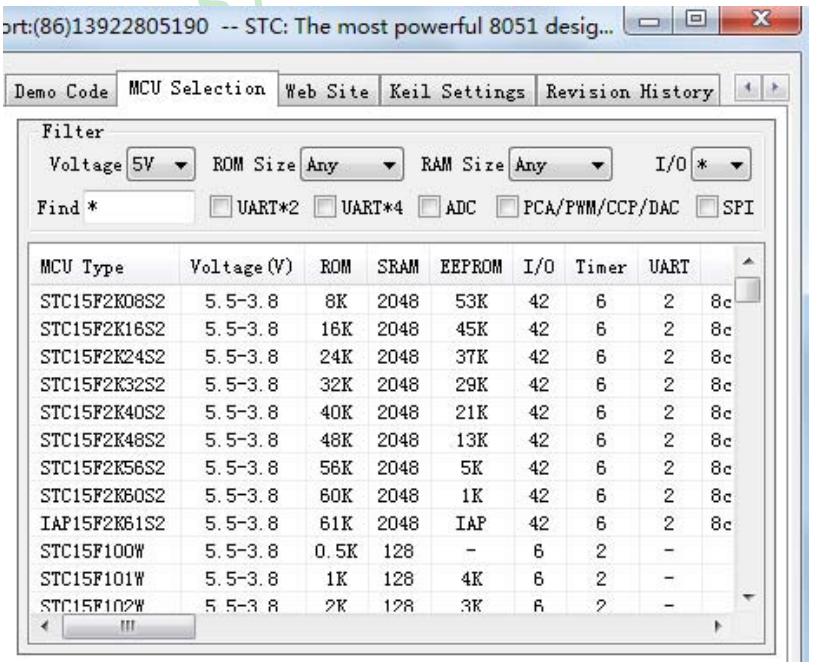

The keil settings interface is shown below

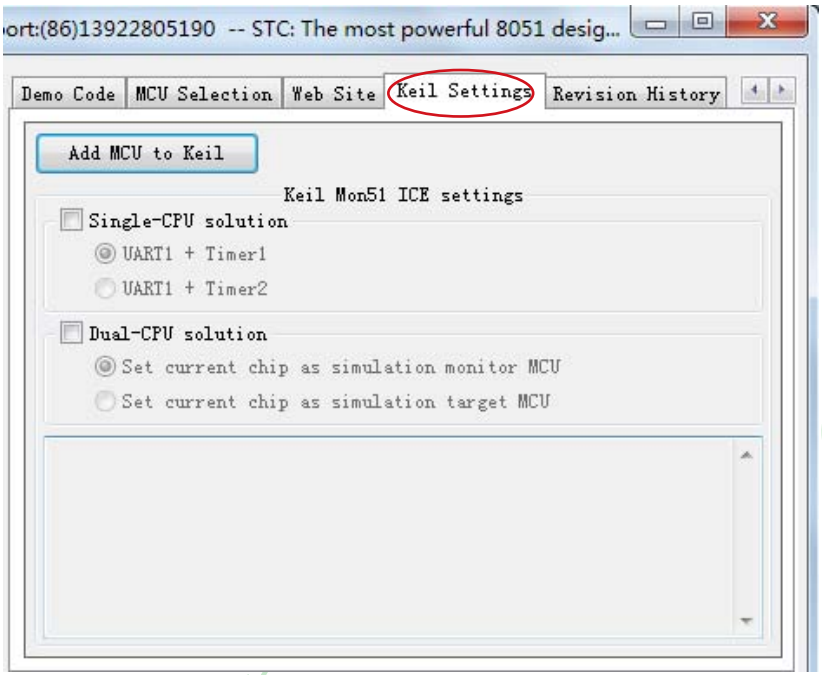

STC

16.3.6 How to Release Project

The release project is a function to bound the user code and related options into a direct download program executable file. On the interface, users can customize (users can modify and publish the application title, the buttons name and help information), at the same time, the user can also specify the target computer's hard disk ID number and the target chip ID. It can control the release application program can only run in the specified computer but cannot run on the other computers. Similarly, when the target chip ID is specified, then the user code can only be downloaded to the target chip has a corresponding ID number, for the other mcu whil do not programming.

The detailed steps are as follows:

1. At first, to select the target MCU type

2. Open the code file

3. Set up the corresponding hardware options

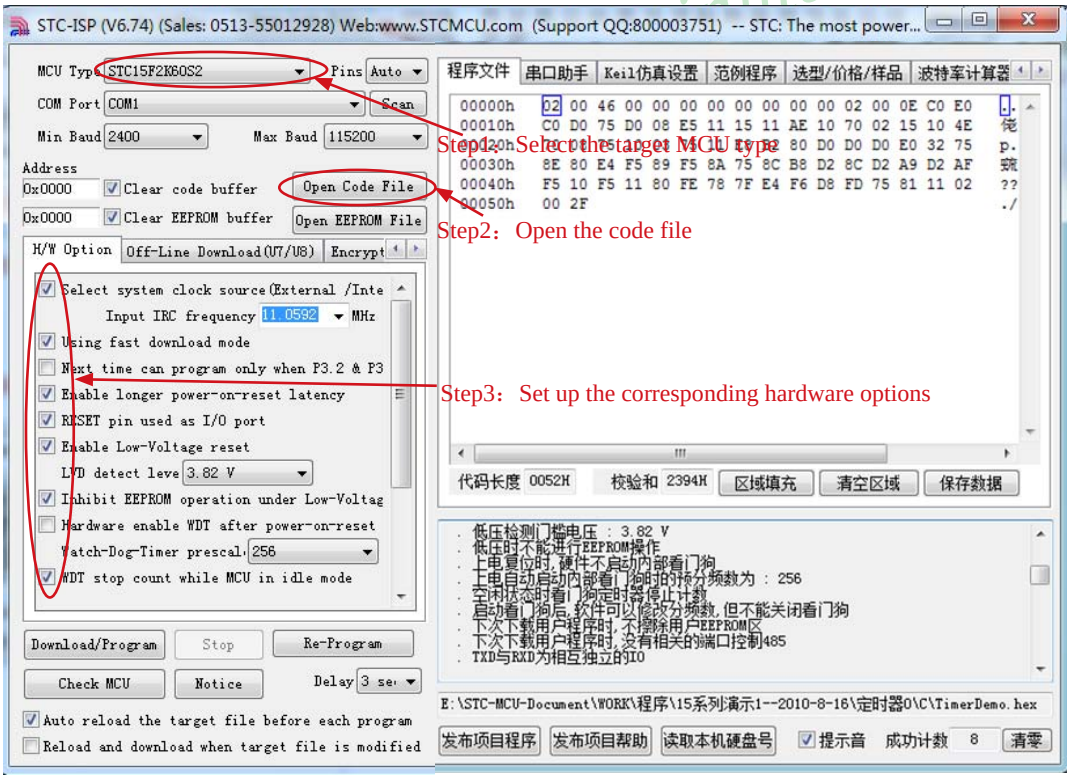

4. Test downloading a chip, and remember the target chip ID
(without check the target chip ID can skip this step)

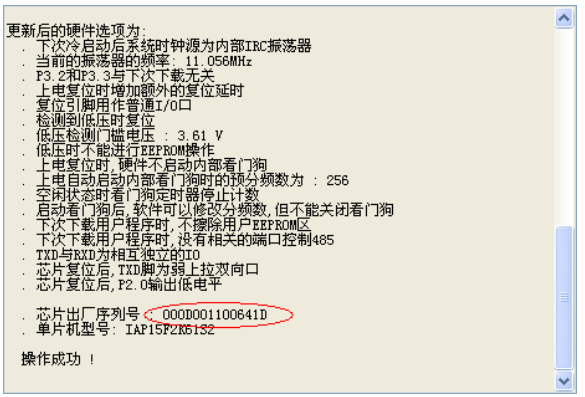

5. Set automatically increment
(neednot automatically increment, can skip this step)

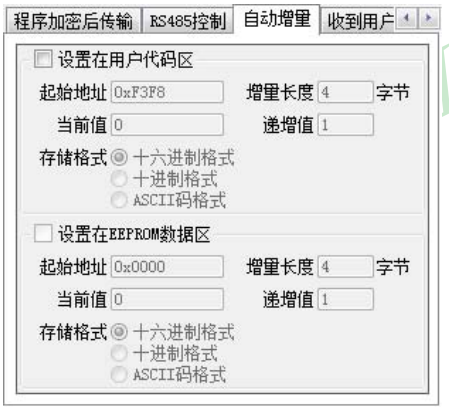

6. Set 485 control options (no using 485 Control, can skip this step)

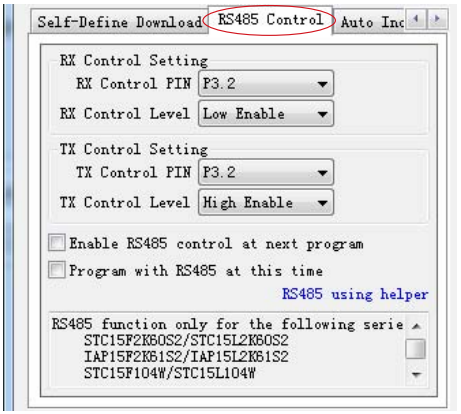

CU Limited.

7. Set custom download command
(no using this function, can skip this step)

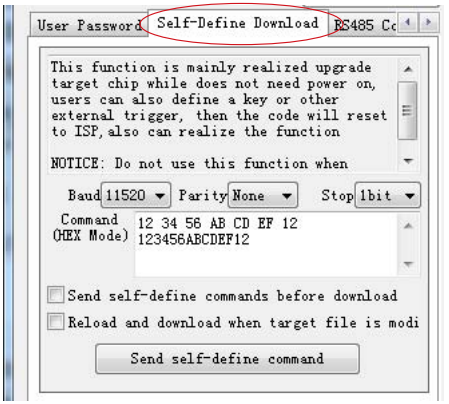

8. Click "read the hard disk" button, and remember the target computer's hard disk number
(neednot to check the target hard disk, can skip this step)

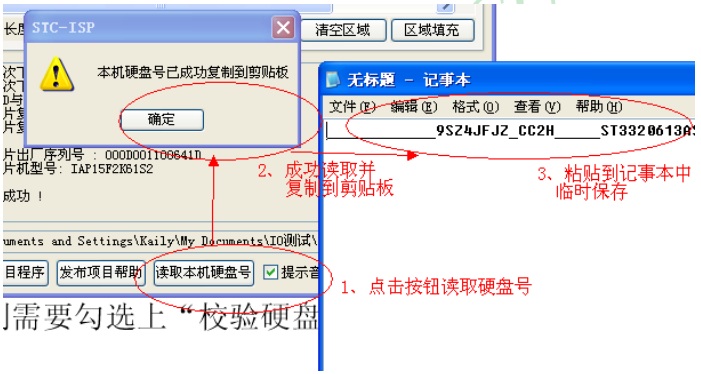

9. Click "Release project" button, enter the release application program settings interface

10. According to your needs, modified release software titles, the buttons name, repeat the download button name, automatic increment name and help informations

11. If you need to check the target computer's hard disk number, to check the "Check HDD-SN", and fill the target computer hard disk number to the following edit box.

12. If you need to check the target chip ID, to check the "check MCU ID", and fill the target MCU ID to the following edit box.

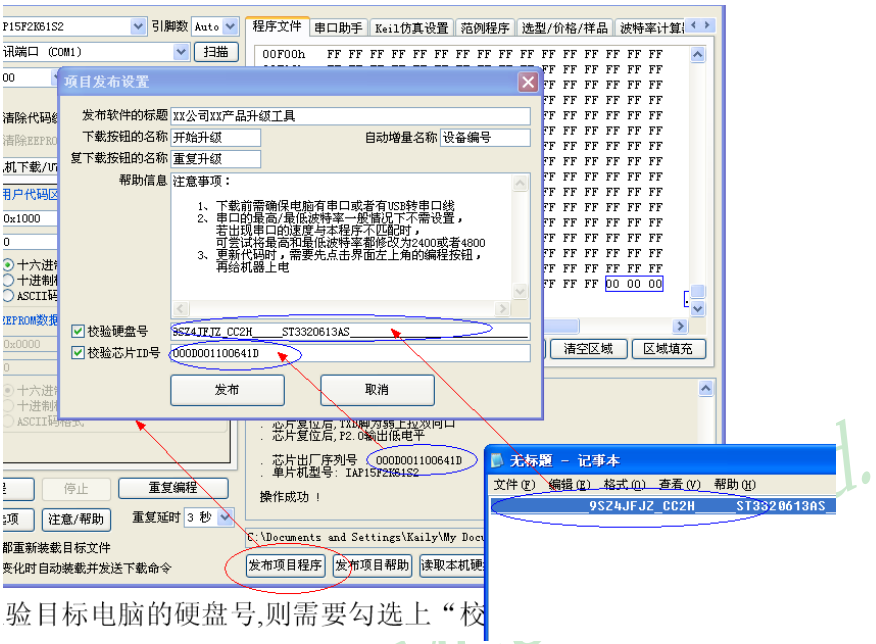

验目标电脑的硬盘号,则需要勾选上“校

13.Click the Publish button, then you can obtain the corresponding executable file

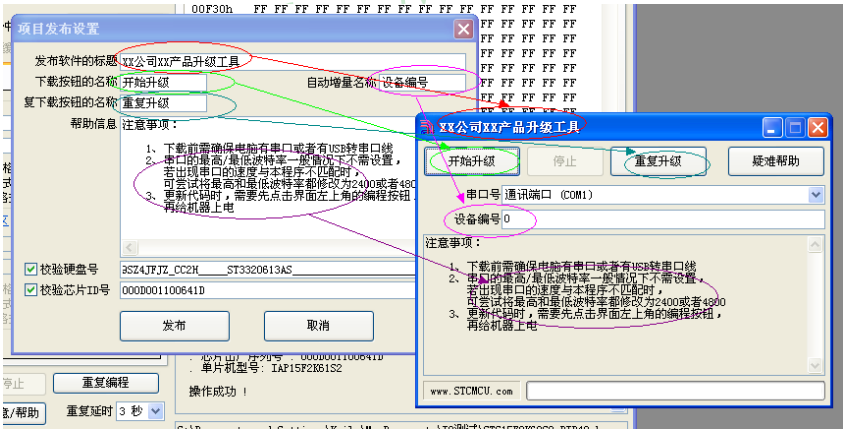

Notice:

The new function which checking HDD-SN and checking MCU ID is only for the following series:

STC15F2K60S2/STC15L2K60S2
IAP15F2K61S2/IAP15L2K61S2
STC15F104W/STC15L104W
IAP15F105W/STC15L105W
STC15W10xSW/IAP15W105W
STC15W201S/IAP15W205S
STC15F408AD/STC15L408AD
IAP15F413AD/IAP15L413AD

16.3.7 How to Encrypt User Code by Software STC15-ISP-Ver6.82

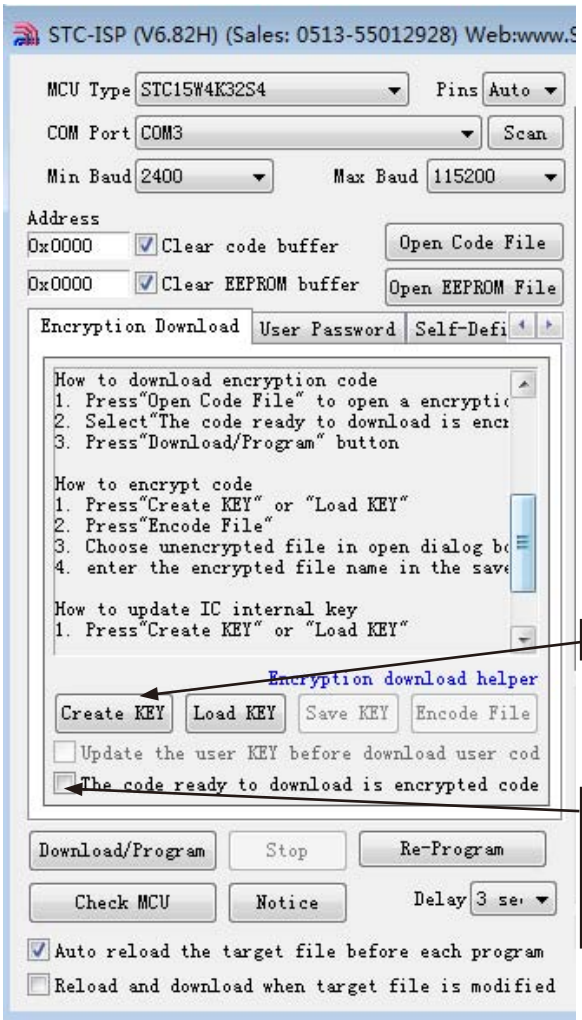

Create a new random key

The code ready to download is encrypted code
Choice: Yes, it's encrypted, and MCU will use the built-in user key to decrypt the code automatically
No-Choice: No, it's not encrypted, and MCU will program the code directly.

Limited.

16.3.8 Self-Defined Download and Demo Program

This function is mainly realized upgrade target chip while does not need power on, users can also define a key or other external trigger, then the code will reset to ISP, also can realize the function.

If using the function, the PC-side application also need to make the following settings

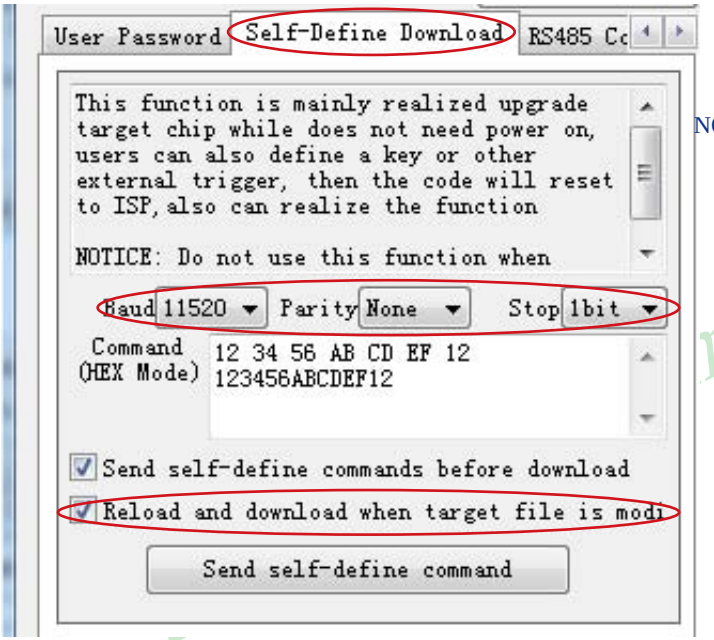

NOTICE : Do not use this function when using the U8 programmer

```
/*---------------------------------------------------------------------------------------------------*/
/* --- STC MCU  Limited. ---------------------------------------------------------------------------*/
/* --- Exam Program using software to realize self-defined download  -------------------------------*/
/* --- Mobile: (86)13922805190 ---------------------------------------------------------------------*/
/* --- Fax: 86-755-82905966 ------------------------------------------------------------------------*/
/* --- Tel: 86-755-82948412 ------------------------------------------------------------------------*/
/* --- Web: www.STCMCU.com -------------------------------------------------------------------------*/
/* If you want to use the program or the program referenced in the  ----------------------------*/
/* article, please specify in which data and procedures from STC    ----------------------------*/
/*---- In Keil C development environment, select the Intel 8052 to compiling ------------------*/
/*----  And only contain < reg51.h > as header file ---------------------------------------------*/
/*---------------------------------------------------------------------------------------------------*/

#include <reg51.h>
#include <instrins.h>

sfr     IAP_CONTR    =    0xc7;
sbit    MCU_Start_Led    =    P1^7;
```

```
#define   Self_Define_ISP_Download_Command      0x22
#define   RELOAD_COUNT          0xfb            //18.432MHz,12T,SMOD=0,9600bps
//#define RELOAD_COUNT          0xf6            //18.432MHz,12T,SMOD=0,4800bps
//#define RELOAD_COUNT          0xec            //18.432MHz,12T,SMOD=0,2400bps
//#define RELOAD_COUNT          0xd8            //18.432MHz,12T,SMOD=0,1200bps

void serial_port_initial(void);
void send_UART(unsigned char);
void UART_Interrupt_Receive(void);
void soft_reset_to_ISP_Monitor(void);
void delay(void);
void display_MCU_Start_Led(void);

void main(void)
{
        unsigned char i = 0;

        serial_port_initial();          //Initial UART
        display_MCU_Start_Led();        //Turn on the work LED
        send_UART(0x34);                //Send UART test data
        send_UART(0xa7);                // Send UART test data
        while (1);
}

void send_UART(unsigned char i)
{
        ES = 0;                         //Disable serial interrupt
        TI = 0;                         //Clear TI flag
        SBUF = i;                       //send this data
        while (!TI);                    //wait for the data is sent
        TI = 0;                         //clear TI flag
        ES = 1;                         //enable serial interrupt
}

void UART_Interrupt)Receive(void) interrupt 4 using 1
{
        unsigned char k = 0;
        if (RI)
        {
                RI = 0;
                k = SBUF;

                if (k == Self_Define_ISP_Command)       //check the serial data
                {
                        delay();                        //delay 1s
                        delay();                        //delay 1s
                        soft_reset_to_ISP_Monitor();
                }
        }
```

STC MCU Limited.

```
        if (TI)
        {
                TI = 0;
        }
}

void soft_reset_to_ISP_Monitor(void)
{
        IAP_CONTR = 0x60;                   //0110,0000 soft reset system to run ISP monitor
}

void delay(void)
{
        unsigned int j = 0;
        unsigned int g = 0;
        for (j=0; j<5; j++)
        {
                for (g=0; g<60000; g++)
                {
                        _nop_();
                        _nop_();
                        _nop_();
                        _nop_();
                        _nop_();
                }
        }
}

void display_MCU_Start_Led(void)
{
        unsigned char i = 0;
        for (i=0; i<3; i++)
        {
                MCU_Start_Led = 0;          //Turn on work LED
                dejay();
                MCU_Start_Led = 1;          //Turn off work LED
                dejay();
                MCU_Start_Led = 0;          //Turn on work LED
        }
}
```

STC MCU Limited.

16.4 Emulator of STC15 series MCU

We provide specific emulator of STC15 series now. But for STC old MCU (such as STC12/11/10 series, STC89/90 series, STC15F204EA and STC15F104E series), we do not provide specific emulator, if you have a traditional 8051 emulator, you can use it to simulate STC old MCU's some 8052 basic functions.

1. Hardware Environment:

The present simulation is double CPU simulation: monitoring CPU and target CPU.
Monitoring CPU is in charge of communicating with Keil-C51 development environment and controlling the target CPU.
The chip of simulation target CPU must be IAP15F2K61S2 or IAP15L2K61S2 or IAP15W4K58S4 or IAP15W4K61S4.
Simulation target CPU can be directly welded on the user's system.
Monitoring CPU is designed in the monitoring CPU board sold by STC.
Recommend that the power of target CPU and user's system should be supplied by monitoring CPU.

Simulation Circuit Diagram for ISP using RS-232 Converter

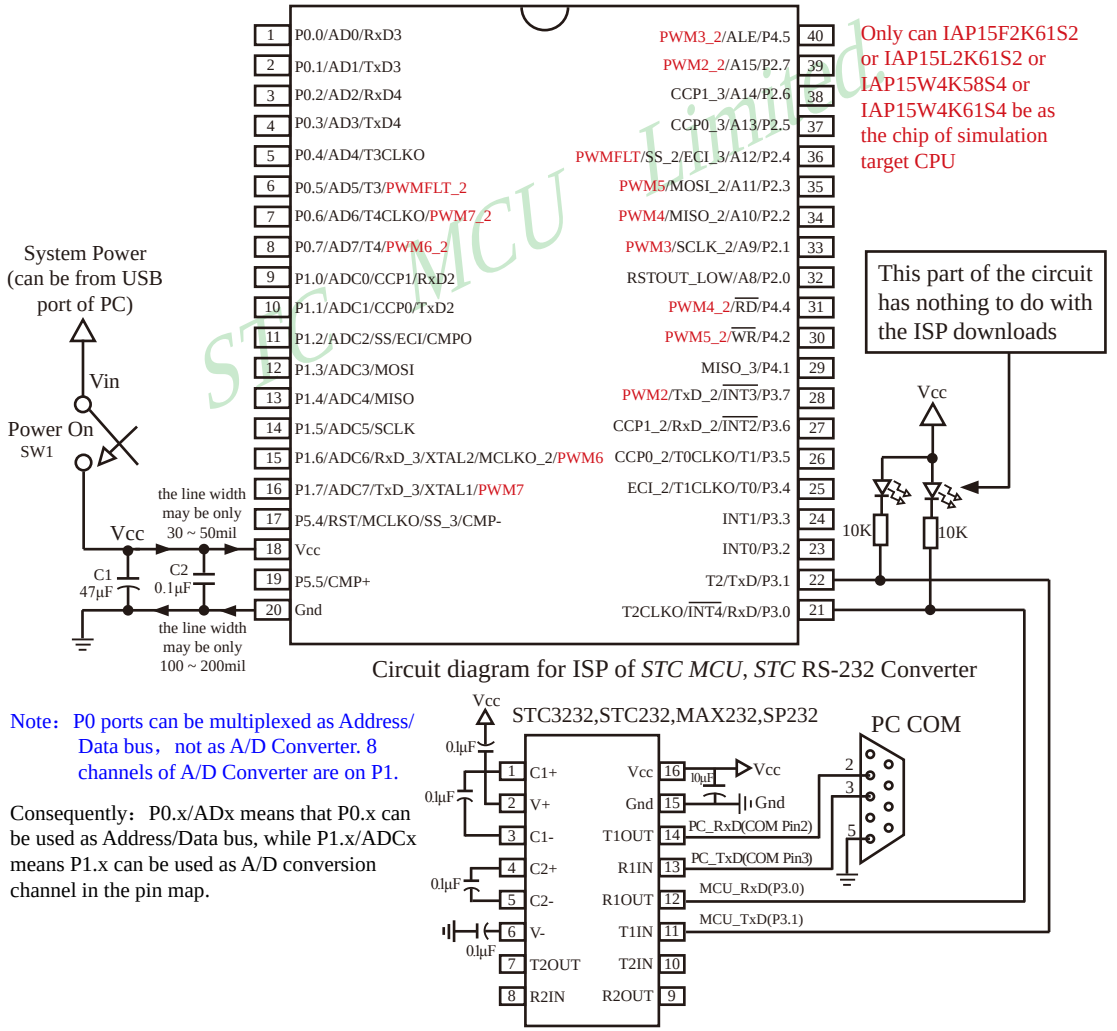

Circuit diagram for ISP of *STC MCU*, *STC* RS-232 Converter

Note: P0 ports can be multiplexed as Address/ Data bus, not as A/D Converter. 8 channels of A/D Converter are on P1.

Consequently: P0.x/ADx means that P0.x can be used as Address/Data bus, while P1.x/ADCx means P1.x can be used as A/D conversion channel in the pin map.

Simulation Circuit Diagram for ISP using USB Chip PL-2303SA to convert Serial Port

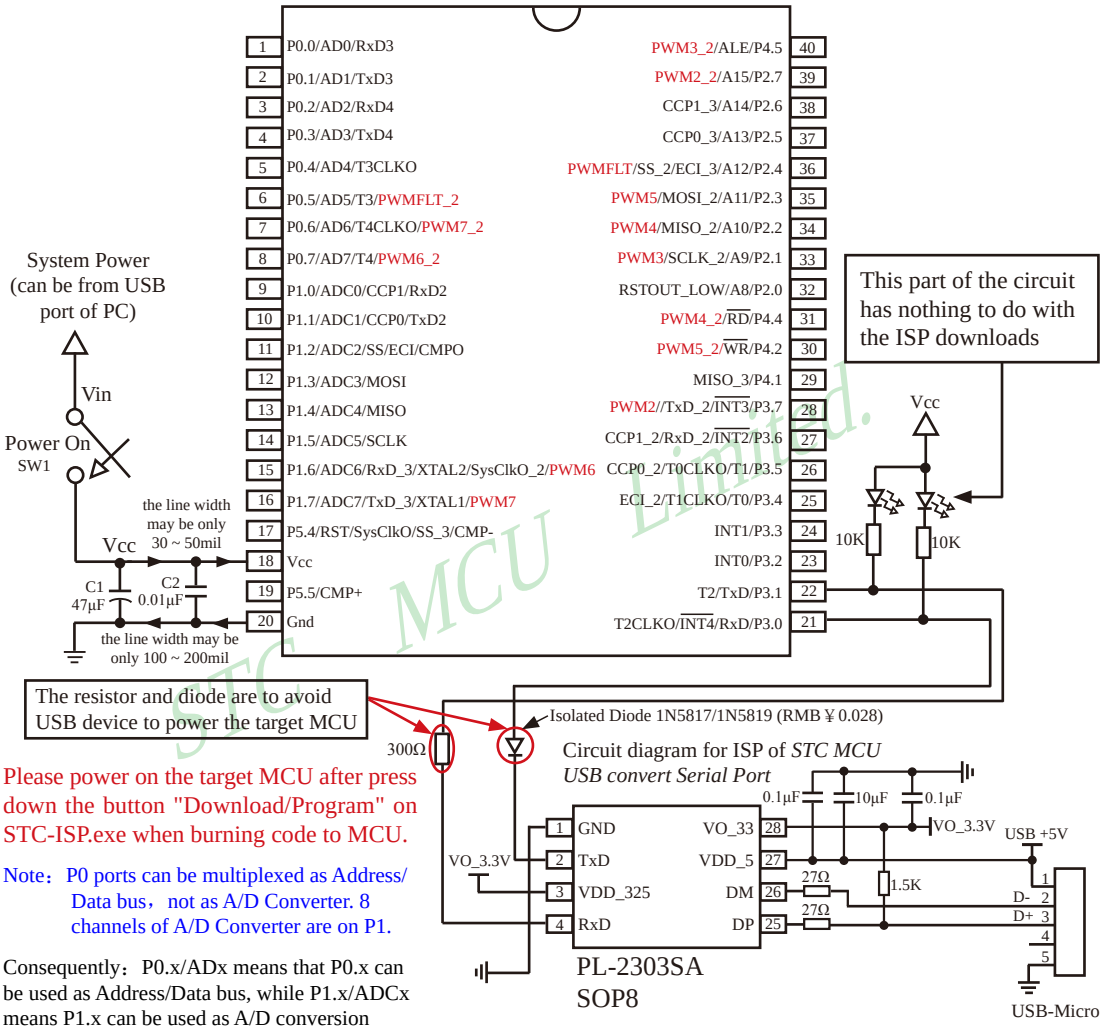

Please power on the target MCU after press down the button "Download/Program" on STC-ISP.exe when burning code to MCU.

Note：P0 ports can be multiplexed as Address/Data bus，not as A/D Converter. 8 channels of A/D Converter are on P1.

Consequently：P0.x/ADx means that P0.x can be used as Address/Data bus, while P1.x/ADCx means P1.x can be used as A/D conversion channel in the pin map.

Internal hghly reliable Reset, External reset circuit can be completely removed.

P5.4/RST/SysClkO pin factory defaults to the I/O port, which can be set as RST reset pin(active high) through the STC-ISP programmer.

Internal high-precise R/C clock(±3%), ±1% temperature drift (-40℃~+85℃) while ±0.6% in normal temperature (-20℃~+65℃). External expensive crysal can be completely removed.

Recommend to add decoupling capacitor C1(47μF) and C2(0.1μF) between Vcc and Gnd that can remove power noise and improve the anti-interference ability.

Simulation Circuit Diagram for ISP using USB Chip PL-2303HXD / PL-2303HX to convert Serial Port

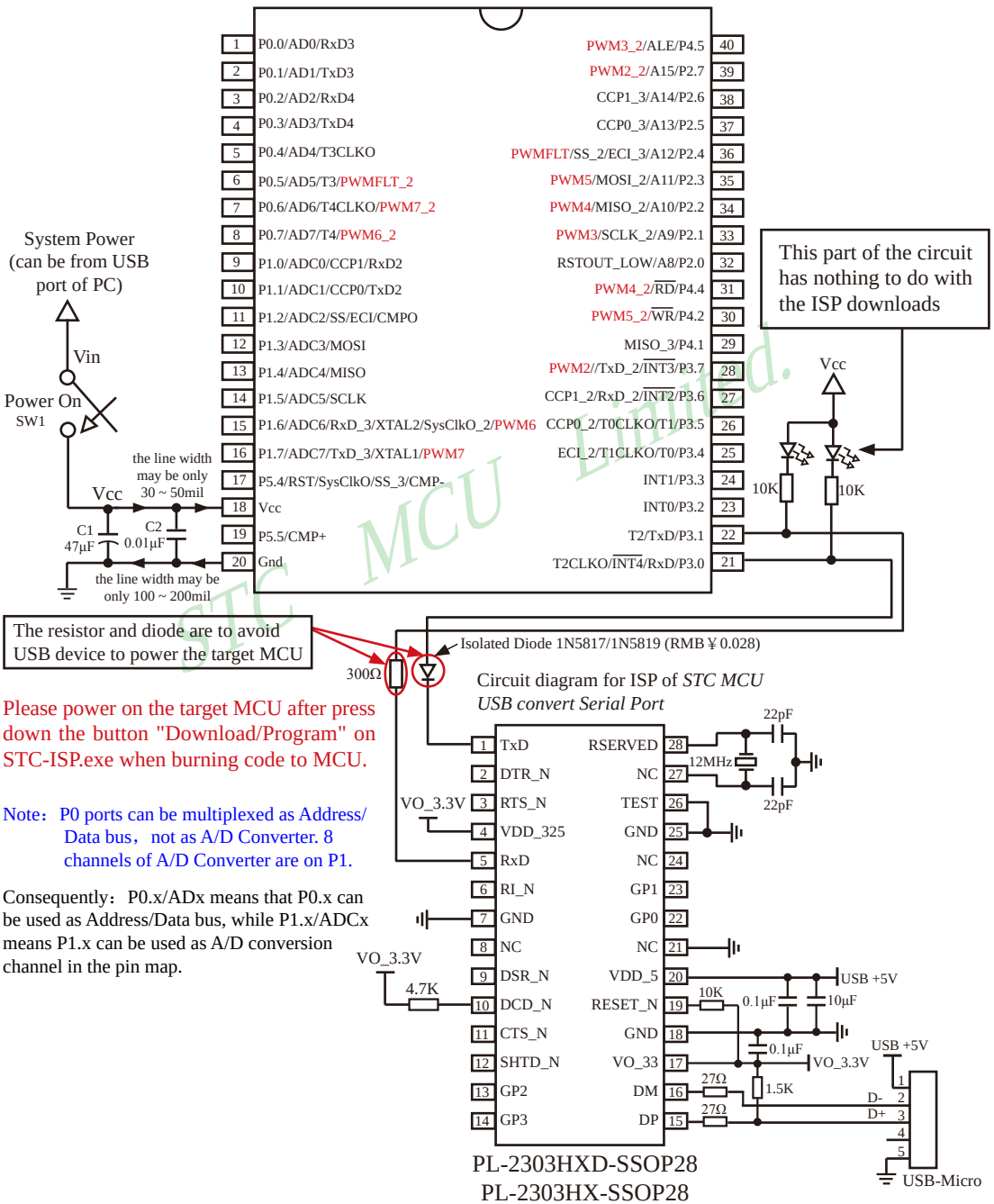

Please power on the target MCU after press down the button "Download/Program" on STC-ISP.exe when burning code to MCU.

Note: P0 ports can be multiplexed as Address/Data bus, not as A/D Converter. 8 channels of A/D Converter are on P1.

Consequently: P0.x/ADx means that P0.x can be used as Address/Data bus, while P1.x/ADCx means P1.x can be used as A/D conversion channel in the pin map.

STC MCU Limited.

2. Software Environment:

The code of reset entrance can be written as follows by assembly.

```
        ORG     0000H                   ;entrance address of reset
        LJMP    RESET                   ;make use of LJMP instruction
        …                               ;other interrupt vectors
        ORG     100H                    ;address of user's code
RESET:                                  ;reset entrance
        …                               ;user's code
```

3. Resources occupied by simulation code

Space of Program memory: The last 6K bytes of program memory is occupied by simulation code.
If utilizing IAP15F2K61S2/IAP15L2K61S2/IAP15W4K61S4 MCU to simulate, user program only can make use of 55K bytes（0x0000~0xDBFF）of program memory and not occupy the last 6K bytes (from 0xDC00 to 0xF3FF)

Common RAM(data,idata): 0 byte

XRAM(xdata) : 768 bytes(0x0400 – 0x06FF, don't be occupied by user program)

I/O: P3.0 / P3.1
P3.0/INT4/T2CLKO and P3.1/T2 can not be used in user program.

For IAP series MCU, the EEPROM operation is achieved by using the spare program memory.
The EEPROM of IAP15F2K61S2 MCU is shown below.

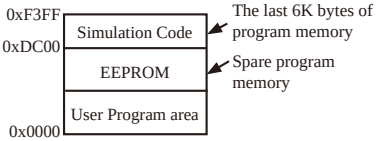

4. STC-ISP Operating

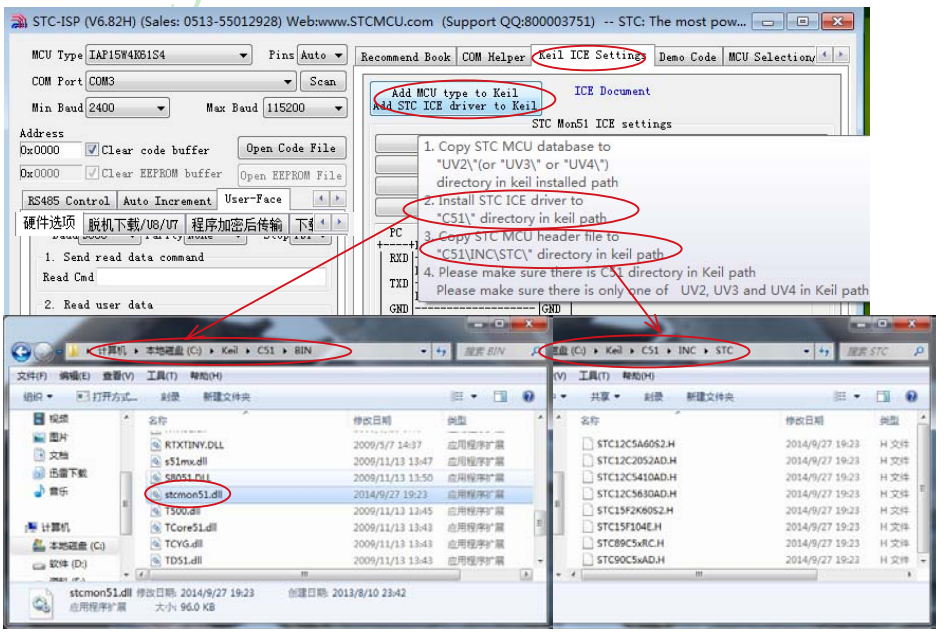

5. Keil Setting

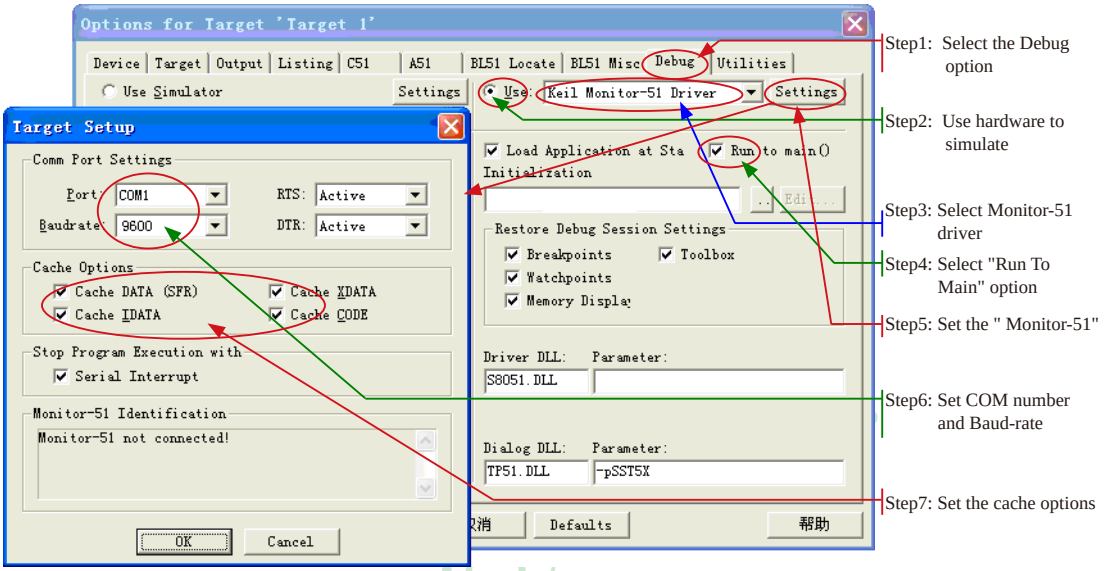

6. Notice

- If a "Halt" order is carried out during running application program, the following dialog would be popup. Please click "Continue" button to return runnig application

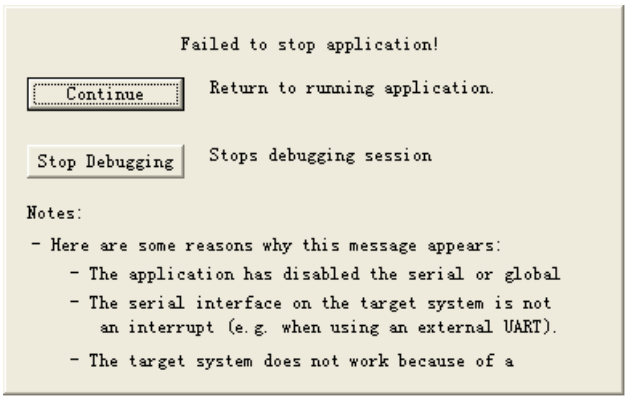

```
     65:                 _nop_();
C:0x0113    00          NOP
     66:             }
C:0x0114    E511        MOV       A,0x11
C:0x0116    1511        DEC       0x11
C:0x0118    7002        JNZ       C:011C
C:0x011A    1510        DEC       0x10
C:0x011C    80C3        SJMP      C:00E1
     67: }
C:0x011E    22          RET
      9: void tm0() interrupt 1 using 1
     10: {
     11:     static unsigned char i=0;
C:0x011F    C0E0        PUSH      ACC(0xE0)
C:0x0121    C0D0        PUSH      PSW(0xD0)
C:0x0123    75D008      MOV       PSW(0xD0),#0x08
     12:     TH0 = T256Hz >> 8;
C:0x0126    758CE8      MOV       TH0(0x8C),#0xE8
     13:     TL0 = T256Hz;
C:0x0129    758A90      MOV       TL0(0x8A),#P1(0x90)
     14:     while (i-- == 0)
C:0x012C    AF12        MOV       R7,0x12
C:0x012E    1512        DEC       0x12
```

STC MCU

Chapter 17 How to Program Slave Chip by Master Chip ——the Slave Chip is only for STC15 series MCU

When utilizing master chip (such as single chip, ARM, DSP and so on) to program the slave chip (STC15 series MCU) by tool STC-ISP Writer/Programmer, you must first stop the salve chip, and then, send downlaod instruction to salve chip (namely STC15 series MCU) by master chip, lastly, give the slave chip for the power-on from master chip. Only by doing so can you utilize master chip (such as single chip, ARM, DSP and so on) to program the STC15 series MCU (Slave chip) by tool STC-ISP Writer/Programmer correctly.

Because master chip (such as single chip, ARM, DSP and so on) need to control the salve chip (STC15 series MCU) to power on during the process of utilizing master chipto program the slave chip by tool STC-ISP Writer/Programmer, That the power switch of the slave chip circuit can be controlled by any one of I/O ports of master chip. The circuit diagram of power supply for salve chip (STC15 series MCU) is shown below, for you reference.

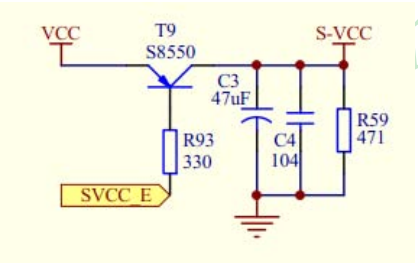

To control the salve chip (STC15 series MCU) to power on by master chip (such as single chip, ARM, DSP and so on), you can connect the SVCC_E in above figure to any one of I/O ports of master chip.

The demo code is shown below that utilizing master chip (such as single chip, ARM, DSP and so on) to program the slave chip (STC15 series MCU) by tool STC-ISP Writer/Programmer :

```
/*---------------------------------------------------------------------------------------------------------------------*/
/* --- STC MCU  Limited. ---------------------------------------------------------------------------------------------*/
/* --- Demo code of utilizing  master chip to program the slave chip (STC15 series MCU)  ----------------------*/
/* --- Mobile: (86)13922805190 ---------------------------------------------------------------------------------------*/
/* --- Fax: 86-755-82905966 ------------------------------------------------------------------------------------------*/
/* --- Tel: 86-755-82948412 ------------------------------------------------------------------------------------------*/
/* --- Web: www.STCMCU.com -------------------------------------------------------------------------------------------*/
/* If you want to use the program or the program referenced in the  ----------------------------------------------*/
/* article, please specify in which data and procedures from STC  ------------------------------------------------*/
/*---- In Keil C development environment, select the Intel 8052 to compiling ----------------------------------------*/
/*----  And only contain < reg51.h > as header file ------------------------------------------------------------------*/
/*---------------------------------------------------------------------------------------------------------------------*/

//suppose the frequency of test chip is 11.0592MHz
```

```
// Note : When utilizing master chip (such as single chip, ARM, DSP and so on) to program the slave chip (STC15
// series MCU) by tool STC-ISP Writer/Programmer, you must first stop the salve chip, and then, send downlaod
// instruction to salve chip (namely STC15 series MCU) by master chip, lastly, give the slave chip for the power-
// on from master chip Download

#include "reg51.h"

typedef bit BOOL;
typedef unsigned char BYTE;
typedef unsigned short WORD;
typedef unsigned long DWORD;

//Define macro and constant
#define   FALSE           0
#define   TRUE            1
#define   LOBYTE(w)       ((BYTE)(WORD)(w))
#define   HIBYTE(w)       ((BYTE)((WORD)(w) >> 8))

#define   MINBAUD         2400L
#define   MAXBAUD         115200L

#define   FOSC            11059200L           //Oprerating Frequency of master chip
#define   BR(n)           (65536 - FOSC/4/(n))    //Baud generate of master chip UART
#define   T1MS            (65536 - FOSC/1000)     //Initial value of 1ms of master chip timer

//#define FUSER           11059200L           //Oprerating Frequency of STC15 series target chip
//#define FUSER           12000000L           //Oprerating Frequency of STC15 series target chip
//#define FUSER           18432000L           //Oprerating Frequency of STC15 series target chip
//#define FUSER           22118400L           //Oprerating Frequency of STC15 series target chip
#define   FUSER           24000000L           //Oprerating Frequency of STC15 series target chip
#define   RL(n)           (65536 - FUSER/4/(n))   //Baud generate of STC15 series target chip UART

//Define SFR
sfr       AUXR    =       0x8e;

//Define variable
BOOL      f1ms;                               //Flag bit of 1ms
BOOL      UartBusy;                           //Flag bit of UART busy
BOOL      UartReceived;                       //Flag bit of UART received
BYTE      UartRecvStep;                       //data controlling receiving by UART
BYTE      TimeOut;                            //Timeout counter of UART
BYTE      xdata TxBuffer[256];                //Data buffer to be sended by UART
BYTE      xdata RxBuffer[256];                //Data buffer to be received by UART
char      code DEMO[256];                     //Demo code data
```

STC MCU Limited.

```
//Declare the function
void Initial(void);
void DelayXms(WORD x);
BYTE UartSend(BYTE dat);
void CommInit(void);
void CommSend(BYTE size);
BOOL Download(BYTE *pdat, long size);

//Main function
void main(void)
{
	while (1)
	{
		Initial();

		if (Download(DEMO, 0x0100))
		{
			//Downlaod successfully
			P3 = 0xff;
			DelayXms(500);
			P3 = 0x00;
			DelayXms(500);
			P3 = 0xff;
			DelayXms(500);
			P3 = 0x00;
			DelayXms(500);
			P3 = 0xff;
			DelayXms(500);
			P3 = 0x00;
			DelayXms(500);
			P3 = 0xff;
		}

		else
		{
			//Download unsuccessfully
			P3 = 0xff;
			DelayXms(500);
			P3 = 0xf3;
			DelayXms(500);
			P3 = 0xff;
			DelayXms(500);
```

STC MCU Limited.

```
                        P3 = 0xf3;
                        DelayXms(500);
                        P3 = 0xff;
                        DelayXms(500);
                        P3 = 0xf3;
                        DelayXms(500);
                        P3 = 0xff;
                }
        }
}

//Interrupt service routine of 1ms Timer
void tm0(void) interrupt 1 using 1
{
        static BYTE Counter100;

        f1ms = TRUE;
        if (Counter100-- == 0)
        {
                Counter100 = 100;
                if (TimeOut) TimeOut--;
        }
}

//interrupt service routine of UART
void uart(void) interrupt 4 using 1
{
        static WORD RecvSum;
        static BYTE RecvIndex;
        static BYTE RecvCount;
        BYTE dat;

        if (TI)
        {
                TI = 0;
                UartBusy = FALSE;
        }

        if (RI)
        {
                RI = 0;
                dat = SBUF;
                switch (UartRecvStep)
                {
```

STC MCU Limited.

```
                case 1:
                    if (dat != 0xb9) goto L_CheckFirst;
                    UartRecvStep++;
                    break;
                case 2:
                    if (dat != 0x68) goto L_CheckFirst;
                    UartRecvStep++;
                    break;
                case 3:
                    if (dat != 0x00) goto L_CheckFirst;
                    UartRecvStep++;
                    break;
                case 4:
                    RecvSum = 0x68 + dat;
                    RecvCount = dat - 6;
                    RecvIndex = 0;
                    UartRecvStep++;
                    break;
                case 5:
                    RecvSum += dat;
                    RxBuffer[RecvIndex++] = dat;
                    if (RecvIndex == RecvCount) UartRecvStep++;
                    break;
                case 6:
                    if (dat != HIBYTE(RecvSum)) goto L_CheckFirst;
                    UartRecvStep++;
                    break;
                case 7:
                    if (dat != LOBYTE(RecvSum)) goto L_CheckFirst;
                    UartRecvStep++;
                    break;
                case 8:
                    if (dat != 0x16) goto L_CheckFirst;
                    UartReceived = TRUE;
                    UartRecvStep++;
                    break;
                L_CheckFirst:
                case 0:
                default:
                    CommInit();
                    UartRecvStep = (dat == 0x46 ? 1 : 0);
                    break;
            }
        }
```

STC MCU Limited.

```
}

//Initialize system
void Initial(void)
{
	UartBusy = FALSE;

	SCON = 0xd0;				//UART mode must be 8 bits data +1 bit parity-check
	AUXR = 0xc0;
	TMOD = 0x00;
	TH0 = HIBYTE(T1MS);
	TL0 = LOBYTE(T1MS);
	TR0 = 1;
	TH1 = HIBYTE(BR(MINBAUD));
	TL1 = LOBYTE(BR(MINBAUD));
	TR1 = 1;
	ET0 = 1;
	ES = 1;
	EA = 1;
}

//Xms Delay program
void DelayXms(WORD x)
{
	do
	{
		f1ms = FALSE;
		while (!f1ms);
	} while (x--);
}

//Send program of UART data
BYTE UartSend(BYTE dat)
{
	while (UartBusy);

	UartBusy = TRUE;
	ACC = dat;
	TB8 = P;
	SBUF = ACC;

	return dat;
}
```

STC MCU Limited.

```
//Initialize UART
void CommInit(void)
{
	UartRecvStep = 0;
	TimeOut = 20;
	UartReceived = FALSE;
}

//Send UART data
void CommSend(BYTE size)
{
	WORD sum;
	BYTE i;

	UartSend(0x46);
	UartSend(0xb9);
	UartSend(0x6a);
	UartSend(0x00);
	sum = size + 6 + 0x6a;
	UartSend(size + 6);
	for (i=0; i<size; i++)
	{
		sum += UartSend(TxBuffer[i]);
	}
	UartSend(HIBYTE(sum));
	 UartSend(LOBYTE(sum));
	UartSend(0x16);
	while (UartBusy);

	CommInit();
}

//program the STC15 series MCU
BOOL Download(BYTE *pdat, long size)
{
	BYTE arg;
	BYTE cnt;
	WORD addr;

	//Handsake
	CommInit();
	while (1)
	{
		if (UartRecvStep == 0)
```

STC MCU Limited.

```
		{
			UartSend(0x7f);
			DelayXms(10);
		}
		if (UartReceived)
		{
			arg = RxBuffer[4];
			if (RxBuffer[0] == 0x50) break;
			return FALSE;
		}
	}

	//Set parameter
	TxBuffer[0] = 0x01;
	TxBuffer[1] = arg;
	TxBuffer[2] = 0x40;
	TxBuffer[3] = HIBYTE(RL(MAXBAUD));
	TxBuffer[4] = LOBYTE(RL(MAXBAUD));
	TxBuffer[5] = 0x00;
	TxBuffer[6] = 0x00;
	TxBuffer[7] = 0xc3;
	CommSend(8);
	while (1)
	{
		if (TimeOut == 0) return FALSE;
		if (UartReceived)
		{
			if (RxBuffer[0] == 0x01) break;
			return FALSE;
		}
	}

	 //make preparations
	TH1 = HIBYTE(BR(MAXBAUD));
	TL1 = LOBYTE(BR(MAXBAUD));
	DelayXms(10);
	TxBuffer[0] = 0x05;
	CommSend(1);
	while (1)
	{
		if (TimeOut == 0) return FALSE;
		if (UartReceived)
		{
			if (RxBuffer[0] == 0x05) break;
```

STC MCU Limited.

```
                return FALSE;
        }
}
 //Erase
DelayXms(10);
TxBuffer[0] = 0x03;
TxBuffer[1] = 0x00;
CommSend(2);
TimeOut = 100;
while (1)
{
        if (TimeOut == 0) return FALSE;
        if (UartReceived)
        {
                if (RxBuffer[0] == 0x03) break;
                return FALSE;
        }
}
//write the code
DelayXms(10);
addr = 0;
TxBuffer[0] = 0x22;
while (addr < size)
{
        TxBuffer[1] = HIBYTE(addr);
        TxBuffer[2] = LOBYTE(addr);
        cnt = 0;
        while (addr < size)
        {
                TxBuffer[cnt+3] = pdat[addr];
                addr++;
                cnt++;
                if (cnt >= 128) break;
        }
        CommSend(cnt + 3);
        while (1)
        {
                if (TimeOut == 0) return FALSE;
                if (UartReceived)
                {
                        if ((RxBuffer[0] == 0x02) && (RxBuffer[1] == 'T')) break;
                        return FALSE;
                }
        }
```

STC MCU Limited.

```
                TxBuffer[0] = 0x02;
        }

        DelayXms(10);
        for (cnt=0; cnt<128; cnt++)
        {
                TxBuffer[cnt] = 0xff;
        }
        TxBuffer[0] = 0x04;
        TxBuffer[1] = 0x00;
        TxBuffer[2] = 0x00;
        TxBuffer[34] = 0xfd;
        TxBuffer[62] = arg;
        TxBuffer[63] = 0x7f;
        TxBuffer[64] = 0xf7;
        TxBuffer[65] = 0x7b;
        TxBuffer[66] = 0x1f;
        CommSend(67);
        while (1)
        {
                if (TimeOut == 0) return FALSE;
                if (UartReceived)
                {
                        if ((RxBuffer[0] == 0x04) && (RxBuffer[1] == 'T')) break;
                        return FALSE;
                }
        }

        //download complete
         return TRUE;
}

char code DEMO[256] =
{
        0x02,   0x00,   0x5E,   0x12,   0x00,   0x4B,   0x75,   0xB0,
        0xEF,   0x12,   0x00,   0x2C,   0x75,   0xB0,   0xDF,   0x12,
        0x00,   0x2C,   0x75,   0xB0,   0xFE,   0x12,   0x00,   0x2C,
        0x75,   0xB0,   0xFD,   0x12,   0x00,   0x2C,   0x75,   0xB0,
        0xFB,   0x12,   0x00,   0x2C,   0x75,   0xB0,   0xF7,   0x12,
        0x00,   0x2C,   0x80,   0xDA,   0xE4,   0xFF,   0xFE,   0xE4,
        0xFD,   0xFC,   0x0D,   0xBD,   0x00,   0x01,   0x0C,   0xBC,
        0x01,   0xF8,   0xBD,   0xF4,   0xF5,   0x0F,   0xBF,   0x00,
        0x01,   0x0E,   0xBE,   0x03,   0xEA,   0xBF,   0xE8,   0xE7,
        0x02,   0x00,   0x4B,   0x75,   0x80,   0xFF,   0x75,   0x90,
```

STC MCU Limited.

```
    0xFF,  0x75,  0xA0,  0xFF,  0x75,  0xB0,  0xFF,  0x75,
    0xC0,  0xFF,  0x75,  0xC8,  0xFF,  0x22,  0x78,  0x7F,
    0xE4,  0xF6,  0xD8,  0xFD,  0x75,  0x81,  0x07,  0x02,
    0x00,  0x03,  0x00,  0x00,  0x00,  0x00,  0x00,  0x00,
    0x00,  0x00,  0x00,  0x00,  0x00,  0x00,  0x00,  0x00,
    0x00,  0x00,  0x00,  0x00,  0x00,  0x00,  0x00,  0x00,
    0x00,  0x00,  0x00,  0x00,  0x00,  0x00,  0x00,  0x00,
    0x00,  0x00,  0x00,  0x00,  0x00,  0x00,  0x00,  0x00,
    0x00,  0x00,  0x00,  0x00,  0x00,  0x00,  0x00,  0x00,
    0x00,  0x00,  0x00,  0x00,  0x00,  0x00,  0x00,  0x00,
    0x00,  0x00,  0x00,  0x00,  0x00,  0x00,  0x00,  0x00,
    0x00,  0x00,  0x00,  0x00,  0x00,  0x00,  0x00,  0x00,
    0x00,  0x00,  0x00,  0x00,  0x00,  0x00,  0x00,  0x00,
    0x00,  0x00,  0x00,  0x00,  0x00,  0x00,  0x00,  0x00,
    0x00,  0x00,  0x00,  0x00,  0x00,  0x00,  0x00,  0x00,
    0x00,  0x00,  0x00,  0x00,  0x00,  0x00,  0x00,  0x00,
    0x00,  0x00,  0x00,  0x00,  0x00,  0x00,  0x00,  0x00,
    0x00,  0x00,  0x00,  0x00,  0x00,  0x00,  0x00,  0x00,
    0x00,  0x00,  0x00,  0x00,  0x00,  0x00,  0x00,  0x00,
    0x00,  0x00,  0x00,  0x00,  0x00,  0x00,  0x00,  0x00,
    0x00,  0x00,  0x00,  0x00,  0x00,  0x00,  0x00,  0x00,
};
```

STC MCU Limited.

Appendix A: Assembly Language Programming

INTRODUCTION

Assembly language is a computer language lying between the extremes of machine language and high-level language like Pascal or C use words and statements that are easily understood by humans, although still a long way from "natural" language.Machine language is the binary language of computers.A machine language program is a series of binary bytes representing instructions the computer can execute.

Assembly language replaces the binary codes of machine language with easy to remember "mnemonics"that facilitate programming.For example, an addition instruction in machine language might be represented by the code "10110011".It might be represented in assembly language by the mnemonic "ADD".Programming with mnemonics is obviously preferable to programming with binary codes.

Of course, this is not the whole story. Instructions operate on data, and the location of the data is specified by various "addressing modes" emmbeded in the binary code of the machine language instruction. So, there may be several variations of the ADD instruction, depending on what is added. The rules for specifying these variations are central to the theme of assembly language programming.

An assembly language program is not executable by a computer. Once written, the program must undergo translation to machine language. In the example above, the mnemonic "ADD" must be translated to the binary code "10110011". Depending on the complexity of the programming environment, this translation may involve one or more steps before an executable machine language program results. As a minimum, a program called an "assembler" is required to translate the instruction mnemonics to machine language binary codes. Afurther step may require a "linker" to combine portions of program from separate files and to set the address in memory at which th program may execute. We begin with a few definitions.

An assembly language program i a program written using labels, mnemonics, and so on, in which each statement corresponds to a machine instruction. Assembly language programs, often called source code or symbolic code, cannot be executed by a computer.

A machine language program is a program containing binary codes that represent instructions to a computer. Machine language programs, often called object code, are executable by a computer.

A assembler is a program that translate an assembly language program into a machine language program. The machine language program (object code) may be in "absolute" form or in "relocatable" form. In the latter case, "linking" is required to set the absolute address for execution.

A linker is a program that combines relocatable object programs (modules) and produces an absolute object program that is executable by a computer. A linker is sometimes called a "linker/locator" to reflect its separate functions of combining relocatable modules (linking) and setting the address for execution (locating).

A segment is a unit of code or data memory. A segment may be relocatable or absolute. A relocatable segment has a name, type, and other attributes that allow the linker to combine it with other paritial segments, if required, and to correctly locate the segment. An absolute segment has no name and cannot be combined with other segments.

A module contains one or more segments or partial segments. A module has a name assigned by the user. The module definitions determine the scope of local symbols. An object file contains one or more modules. A module may be thought of as a "file" in many instances.

A program consists of a single absolute module, merging all absolute and relocatable segments from all input modules. A program contains only the binary codes for instructions (with address and data constants) that are understood by a computer.

STC MCU Limited

ASSEMBLER OPERATION

There are many assembler programs and other support programs available to facilitate the development of applications for the 8051 microcontroller. Intel's original MCS-51 family assembler, ASM51, is no longer available commercially. However, it set the standard to which the others are compared.

ASM51 is a powerful assembler with all the bells and whistles. It is available on Intel development systems and on the IBM PC family of microcomputers. Since these "host" computers contain a CPU chip other than the 8051, ASM51 is called a cross assembler. An 8051 source program may be written on the host computer (using any text editor) and may be assembled to an object file and listing file (using ASM51), but the program may not be executed. Since the host system's CPU chip is not an 8051, it does not understand the binary instruction in the object file. Execution on the host computer requires either hardware emulation or software simulation of the target CPU. A third possibility is to download the object program to an 8051-based target system for execution.

ASM51 is invoked from the system prompt by

ASM51 source_file [assembler_controls]

The source file is assembled and any assembler controls specified take effect. The assembler receives a source file as input (e.g., PROGRAM.SRC) and generates an object file (PROGRAM.OBJ) and listing file (PROGRAM.LST) as output. This is illustrated in Figure 1.

Since most assemblers scan the source program twice in performing the translation to machine language, they are described as two-pass assemblers. The assembler uses a location counter as the address of instructions and the values for labels. The action of each pass is described below.

STC MCU Limited.

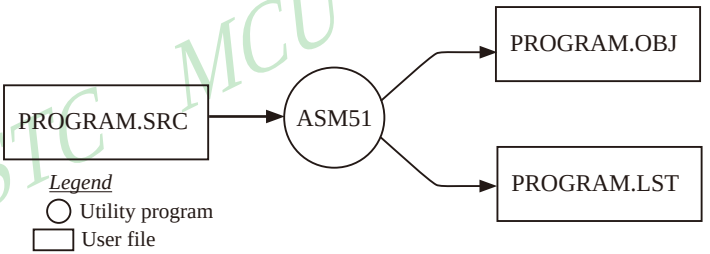

Figure 1 Assembling a source program

Pass one

During the first pass, the source file is scanned line-by-line and a symbol table is built. The location counter defaults to 0 or is set by the ORG (set origin) directive. As the file is scanned, the location counter is incremented by the length of each instruction. Define data directives (DBs or DWs) increment the location counter by the number of bytes defined. Reserve memory directives (DSs) increment the location counter by the number of bytes reserved.

Each time a label is found at the beginning of a line, it is placed in the symbol table along with the current value of the location counter. Symbols that are defined using equate directives (EQUs) are placed in the symbol table along with the "equated" value. The symbol table is saved and then used during pass two.

Pass two

During pass two, the object and listing files are created. Mnemonics are converted to opcodes and placed in the output files. Operands are evaluated and placed after the instruction opcodes. Where symbols appear in the operand field, their values are retrieved from the symbol table (created during pass one) and used in calculating the correct data or addresses for the instructions.

Since two passes are performed, the source program may use "forward references", that is, use a symbol before it is defined. This would occur, for example, in branching ahead in a program.

The object file, if it is absolute, contains only the binary bytes (00H-0FH) of the machine language program. A relocatable object file will also contain a sysmbol table and other information required for linking and locating. The listing file contains ASCII text codes (02H-7EH) for both the source program and the hexadecimal bytes in the machine language program.

A good demonstration of the distinction between an object file and a listing file is to display each on the host computer's CRT display (using, for example, the TYPE command on MS-DOS systems). The listing file clearly displays, with each line of output containing an address, opcode, and perhaps data, followed by the program statement from the source file. The listing file displays properly because it contains only ASCII text codes. Displaying the object file is a problem, however. The output will appear as "garbage", since the object file contains binary codes of an 8051 machine language program, rather than ASCII text codes.

ASSEMBLY LANGUAGE PROGRAM FORMAT

Assembly language programs contain the following:

- Machine instructions
- Assembler directives
- Assembler controls
- Comments

Machine instructions are the familiar mnemonics of executable instructions (e.g., ANL). Assembler directives are instructions to the assembler program that define program structure, symbols, data, constants, and so on (e.g., ORG). Assembler controls set assembler modes and direct assembly flow (e.g., $TITLE). Comments enhance the readability of programs by explaining the purpose and operation of instruction sequences.

Those lines containing machine instructions or assembler directives must be written following specific rules understood by the assembler. Each line is divided into "fields" separated by space or tab characters. The general format for each line is as follows:

[label:] mnemonic [operand] [, operand] […] [;commernt]

STC MCU Limited.

Only the mnemonic field is mandatory. Many assemblers require the label field, if present, to begin on the left in column 1, and subsequent fields to be separated by space or tab charecters. With ASM51, the label field needn't begin in column 1 and the mnemonic field needn't be on the same line as the label field. The operand field must, however, begin on the same line as the mnemonic field. The fields are described below.

Label Field

A label represents the address of the instruction (or data) that follows. When branching to this instruction, this label is usded in the operand field of the branch or jump instruction (e.g., SJMP SKIP).

Whereas the term "label" always represents an address, the term "symbol" is more general. Labels are one type of symbol and are identified by the requirement that they must terminate with a colon(:). Symbols are assigned values or attributes, using directives such as EQU, SEGMENT, BIT, DATA, etc. Symbols may be addresses, data constants, names of segments, or other constructs conceived by the programmer. Symbols do not terminate with a colon. In the example below, PAR is a symbol and START is a label (which is a type of symbol).

```
PAR     EQU   500           ;"PAR" IS A SYMBOL WHICH
                            ;REPRESENTS THE VALUE 500
START:  MOV   A,#0FFH       ;"START" IS A LABEL WHICH
                            ;REPRESENTS THE ADDRESS OF
                            ;THE MOV INSTRUCTION
```

A symbol (or label) must begin with a letter, question mark, or underscore (_); must be followed by letters, digit, "?", or "_"; and can contain up to 31 characters. Symbols may use upper- or lowercase characters, but they are treated the same. Reserved words (mnemonics, operators, predefined symbols, and directives) may not be used.

Mnemonic Field

Intruction mnemonics or assembler directives go into mnemonic field, which follows the label field. Examples of instruction mnemonics are ADD, MOV, DIV, or INC. Examples of assembler directives are ORG, EQU, or DB.

Operand Field

The operand field follows the mnemonic field. This field contains the address or data used by the instruction. A label may be used to represent the address of the data, or a symbol may be used to represent a data constant. The possibilities for the operand field are largely dependent on the operation. Some operations have no operand (e.g., the RET instruction), while others allow for multiple operands separated by commas. Indeed, the possibilties for the operand field are numberous, and we shall elaborate on these at length. But first, the comment field.

Comment Field

Remarks to clarify the program go into comment field at the end of each line. Comments must begin with a semicolon (;). Each lines may be comment lines by beginning them with a semicolon. Subroutines and large sections of a program generally begin with a comment block—serveral lines of comments that explain the general properties of the section of software that follows.

STC MCU Limited.

Special Assembler Symbols

Special assembler symbols are used for the register-specific addressing modes. These include A, R0 through R7, DPTR, PC, C and AB. In addition, a dollar sign ($) can be used to refer to the current value of the location counter. Some examples follow.

```
        SETB    C
        INC     DPTR
        JNB     TI , $
```

The last instruction above makes effective use of ASM51's location counter to avoid using a label. It could also be written as

```
HERE:   JNB     TI , HERE
```

Indirect Address

For certain instructions, the operand field may specify a register that contains the address of the data. The commercial "at" sign (@) indicates address indirection and may only be used with R0, R1, the DPTR, or the PC, depending on the instruction. For example,

```
        ADD     A , @R0
        MOVC    A , @A+PC
```

The first instruction above retrieves a byte of data from internal RAM at the address specified in R0. The second instruction retrieves a byte of data from external code memory at the address formed by adding the contents of the accumulator to the program counter. Note that the value of the program counter, when the add takes place, is the address of the instruction following MOVC. For both instruction above, the value retrieved is placed into the accumulator.

Immediate Data

Instructions using immediate addressing provide data in the operand field that become part of the instruction. Immediate data are preceded with a pound sign (#). For example,

```
CONSTANT    EQU     100
            MOV     A , #0FEH
            ORL     40H , #CONSTANT
```

All immediate data operations (except MOV DPTR,#data) require eight bits of data. The immediate data are evaluated as a 16-bit constant, and then the low-byte is used. All bits in the high-byte must be the same (00H or FFH) or the error message "value will not fit in a byte" is generated. For example, the following instructions are syntactically correct:

```
MOV     A , #0FF00H
MOV     A , #00FFH
```

But the following two instructions generate error messages:

```
MOV     A , #0FE00H
MOV     A , #01FFH
```

If signed decimal notation is used, constants from -256 to +255 may also be used. For example, the following two instructions are equivalent (and syntactically correct):

```
MOV     A , #-256
MOV     A , #0FF00H
```

Both instructions above put 00H into accumulator A.

STC MCU Limited.

Data Address

Many instructions access memory locations using direct addressing and require an on-chip data memory address (00H to 7FH) or an SFR address (80H to 0FFH) in the operand field. Predefined symbols may be used for the SFR addresses. For example,

```
MOV     A , 45H
MOV     A , SBUF        ;SAME AS MOV A, 99H
```

Bit Address

One of the most powerful features of the 8051 is the ability to access individual bits without the need for masking operations on bytes. Instructions accessing bit-addressable locations must provide a bit address in internal data memory (00h to 7FH) or a bit address in the SFRs (80H to 0FFH).

There are three ways to specify a bit address in an instruction: (a) explicitly by giving the address, (b) using the dot operator between the byte address and the bit position, and (c) using a predefined assembler symbol. Some examples follow.

```
SETB    0E7H        ;EXPLICIT BIT ADDRESS
SETB    ACC.7       ;DOT OPERATOR (SAME AS ABOVE)
JNB     TI , $      ;"TI" IS A PRE-DEFINED SYMBOL
JNB     99H , $     ;(SAME AS ABOVE)
```

Code Address

A code address is used in the operand field for jump instructions, including relative jumps (SJMP and conditional jumps), absolute jumps and calls (ACALL, AJMP), and long jumps and calls (LJMP, LCALL).

The code address is usually given in the form of a label.

ASM51 will determine the correct code address and insert into the instruction the correct 8-bit signed offset, 11-bit page address, or 16-bit long address, as appropriate.

Generic Jumps and Calls

ASM51 allows programmers to use a generic JMP or CALL mnemonic. "JMP" can be used instead of SJMP, AJMP or LJMP; and "CALL" can be used instead of ACALL or LCALL. The assembler converts the generic mnemonic to a "real" instruction following a few simple rules. The generic mnemonic converts to the short form (for JMP only) if no forward references are used and the jump destination is within -128 locations, or to the absolute form if no forward references are used and the instruction following the JMP or CALL instruction is in the same 2K block as the destination instruction. If short or absolute forms cannot be used, the conversion is to the long form.

The conversion is not necessarily the best programming choice. For example, if branching ahead a few instrucions, the generic JMP will always convert to LJMP even though an SJMP is probably better. Consider the following assembled instructions sequence using three generic jumps.

```
LOC     OBJ       LINE     SOURCE
1234              1                      ORG     1234H
1234    04        2        START:        INC     A
1235    80FD      3                      JMP     START           ;ASSEMBLES AS SJMP
12FC              4                      ORG     START + 200
12FC    4134      5                      JMP     START           ;ASSEMBLES AS AJMP
12FE    021301    6                      JMP     FINISH          ;ASSEMBLES AS LJMP
1301    04        7        FINISH:       INC     A
                  8                      END
```

The first jump (line 3) assembles as SJMP because the destination is before the jump (i.e., no forward reference) and the offset is less than -128. The ORG directive in line 4 creates a gap of 200 locations between the label START and the second jump, so the conversion on line 5 is to AJMP because the offset is too great for SJMP. Note also that the address following the second jump (12FEH) and the address of START (1234H) are within the same 2K page, which, for this instruction sequence, is bounded by 1000H and 17FFH. This criterion must be met for absolute addressing. The third jump assembles as LJMP because the destination (FINISH) is not yet defined when the jump is assembled (i.e., a forward reference is used). The reader can verify that the conversion is as stated by examining the object field for each jump instruction.

ASSEMBLE-TIME EXPRESSION EVALUATION

Values and constants in the operand field may be expressed three ways: (a) explicitly (e.g.,0EFH), (b) with a predefined symbol (e.g., ACC), or (c) with an expression (e.g.,2 + 3). The use of expressions provides a powerful technique for making assembly language programs more readable and more flexible. When an expression is used, the assembler calculates a value and inserts it into the instruction.

All expression calculations are performed using 16-bit arithmetic; however, either 8 or 16 bits are inserted into the instruction as needed. For example, the following two instructions are the same:

```
MOV     DPTR,   #04FFH + 3
MOV     DPTR,   #0502H          ;ENTIRE 16-BIT RESULT USED
```

If the same expression is used in a "MOV A,#data" instruction, however, the error message "value will not fit in a byte" is generated by ASM51. An overview of the rules for evaluateing expressions follows.

STC MCU Limited.

Number Bases

The base for numeric constants is indicated in the usual way for Intel microprocessors. Constants must be followed with "B" for binary, "O" or "Q" for octal, "D" or nothing for decimal, or "H" for hexadecimal. For example, the following instructions are the same:

```
MOV     A , #15H
MOV     A , #1111B
MOV     A , #0FH
MOV     A , #17Q
MOV     A , #15D
```

Note that a digit must be the first character for hexadecimal constants in order to differentiate them from labels (i.e., "0A5H" not "A5H").

Charater Strings

Strings using one or two characters may be used as operands in expressions. The ASCII codes are converted to the binary equivalent by the assembler. Character constants are enclosed in single quotes ('). Some examples follow.

```
CJNE    A ,  # 'Q', AGAIN
SUBB    A ,  # '0'                    ;CONVERT ASCII DIGIT TO BINARY DIGIT
MOV     DPTR, # 'AB'
MOV     DPTR, #4142H                  ;SAME AS ABOVE
```

STC MCU Limited.

Arithmetic Operators

The arithmetic operators are

+	addition
-	subtraction
*	multiplication
/	division
MOD	modulo (remainder after division)

For example, the following two instructions are same:

```
MOV     A, 10 +10H
MOV     A, #1AH
```

The following two instructions are also the same:

```
MOV     A, #25 MOD 7
MOV     A, #4
```

Since the MOD operator could be confused with a symbol, it must be seperated from its operands by at least one space or tab character, or the operands must be enclosed in parentheses. The same applies for the other operators composed of letters.

Logical Operators

The logical operators are

OR	logical	OR
AND	logical	AND
XOR	logical	Exclusive OR
NOT	logical	NOT (complement)

The operation is applied on the corresponding bits in each operand. The operator must be separated from the operands by space or tab characters. For example, the following two instructions are the same:

```
MOV     A, # '9'  AND  0FH
MOV     A, #9
```

The NOT operator only takes one operand. The following three MOV instructions are the same:

```
THREE           EQU     3
MINUS_THREE     EQU     -3
                MOV     A, # (NOT THREE) + 1
                MOV     A, #MINUS_THREE
                MOV     A, #11111101B
```

Special Operators

The sepcial operators are

SHR	shift right
SHL	shift left
HIGH	high-byte
LOW	low-byte
()	evaluate first

For example, the following two instructions are the same:

```
MOV     A, #8  SHL  1
MOV     A, #10H
```

The following two instructions are also the same:

```
MOV     A, #HIGH  1234H
MOV     A, #12H
```

STC MCU Limited.

Relational Operators

When a relational operator is used between two operands, the result is alwalys false (0000H) or true (FFFFH). The operators are

EQ	=	equals
NE	< >	not equals
LT	<	less than
LE	<=	less than or equal to
GT	>	greater than
GE	>=	greater than or equal to

Note that for each operator, two forms are acceptable (e.g., "EQ" or "="). In the following examples, all relational tests are "true":

```
MOV     A, #5 = 5
MOV     A,#5 NE 4
MOV     A,# 'X'  LT  'Z'
MOV     A,# 'X'  >=  'X'
MOV     A,#$ > 0
MOV     A,#100 GE 50
```

So, the assembled instructions are equal to

```
MOV     A, #0FFH
```

Even though expressions evaluate to 16-bit results (i.e., 0FFFFH), in the examples above only the low-order eight bits are used, since the instruction is a move byte operation. The result is not considered too big in this case, because as signed numbers the 16-bit value FFFFH and the 8-bit value FFH are the same (-1).

Expression Examples

The following are examples of expressions and the values that result:

Expression	Result
'B' - 'A'	0001H
8/3	0002H
155 MOD 2	0001H
4 * 4	0010H
8 AND 7	0000H
NOT 1	FFFEH
'A' SHL 8	4100H
LOW 65535	00FFH
(8 + 1) * 2	0012H
5 EQ 4	0000H
'A' LT 'B'	FFFFH
3 <= 3	FFFFHss

STC MCU Limited.

A practical example that illustrates a common operation for timer initialization follows: Put -500 into Timer 1 registers TH1 and TL1. In using the HIGH and LOW operators, a good approach is

```
VALUE   EQU     -500
        MOV     TH1, #HIGH  VALUE
        MOV     TL1, #LOW VALUE
```

The assembler converts -500 to the corresponding 16-bit value (FE0CH); then the HIGH and LOW operators extract the high (FEH) and low (0CH) bytes. as appropriate for each MOV instruction.

Operator Precedence

The precedence of expression operators from highest to lowest is

```
( )
HIGH LOW
* / MOD SHL SHR
+ -
EQ NE LT LE GT GE = <> < <= > >=
NOT
AND
OR XOR
```

When operators of the same precedence are used, they are evaluated left to right.
Examples:

Expression	Value
HIGH ('A' SHL 8)	0041H
HIGH 'A' SHL 8	0000H
NOT 'A' - 1	FFBFH
'A' OR 'A' SHL 8	4141H

ASSEMBLER DIRECTIVES

Assembler directives are instructions to the assembler program. They are not assembly language instructions executable by the target microprocessor. However, they are placed in the mnemonic field of the program. With the exception of DB and DW, they have no direct effect on the contents of memory.

ASM51 provides several catagories of directives:

- Assembler state control (ORG, END, USING)
- Symbol definition (SEGMENT, EQU, SET, DATA, IDATA, XDATA, BIT, CODE)
- Storage initialization/reservation (DS, DBIT, DB, DW)
- Program linkage (PUBLIC, EXTRN,NAME)
- Segment selection (RSEG, CSEG, DSEG, ISEG, ESEG, XSEG)

Each assembler directive is presented below, ordered by catagory.

Assembler State Control

ORG (Set Origin) The format for the ORG (set origin) directive is

```
ORG     expression
```

The ORG directive alters the location counter to set a new program origin for statements that follow. A label is not permitted. Two examples follow.

```
ORG     100H                        ;SET LOCATION COUNTER TO 100H
ORG     ($ + 1000H)  AND  0F00H     ;SET TO NEXT 4K BOUNDARY
```

The ORG directive can be used in any segment type. If the current segment is absolute, the value will be an absolute address in the current segment. If a relocatable segment is active, the value of the ORG expression is treated as an offset from the base address of the current instance of the segment.

End The format of the END directive is

```
END
```

END should be the last statement in the source file. No label is permitted and nothing beyond the END statement is processed by the assembler.

Using The format of the END directive is

```
USING   expression
```

This directive informs ASM51 of the currently active register bank. Subsequent uses of the predefined symbolic register addresses AR0 to AR7 will convert to the appropriate direct address for the active register bank. Consider the following sequence:

```
USING   3
PUSH    AR7
USING   1
PUSH    AR7
```

The first push above assembles to PUSH 1FH (R7 in bank 3), whereas the second push assembles to PUSH 0FH (R7 in bank 1).

Note that USING does not actually switch register banks; it only informs ASM51 of the active bank. Executing 8051 instructions is the only way to switch register banks. This is illustrated by modifying the example above as follows:

STC MCU Limited.

```
MOV     PSW, #00011000B         ;SELECT REGISTER BANK 3
USING   3
PUSH    AR7                     ;ASSEMBLE TO PUSH 1FH
MOV     PSW, #00001000B         ;SELECT REGISTER BANK 1
USING   1
PUSH    AR7                     ;ASSEMBLE TO PUSH 0FH
```

Symbol Definition

The symbol definition directives create symbols that represent segment, registers, numbers, and addresses. None of these directives may be preceded by a label. Symbols defined by these directives may not have been previously defined and may not be redefined by any means. The SET directive is the only exception. Symbol definiton directives are described below.

Segment The format for the SEGMENT directive is shown below.

```
symbol          SEGMENT         segment_type
```

The symbol is the name of a relocatable segment. In the use of segments, ASM51 is more complex than conventional assemblers, which generally support only "code" and "data" segment types. However, ASM51 defines additional segment types to accommodate the diverse memory spaces in the 8051. The following are the defined 8051 segment types (memory spaces):

- CODE (the code segment)
- XDATA (the external data space)
- DATA (the internal data space accessible by direct addressing, 00H–07H)
- IDATA (the entire internal data space accessible by indirect addressing, 00H–07H)
- BIT (the bit space; overlapping byte locations 20H–2FH of the internal data space)

For example, the statement

```
EPROM           SEGMENT         CODE
```

declares the symbol EPROM to be a SEGMENT of type CODE. Note that this statement simply declares what EPROM is. To actually begin using this segment, the RSEG directive is used (see below).

EQU (Equate) The format for the EQU directive is

```
Symbol          EQU     expression
```

The EQU directive assigns a numeric value to a specified symbol name. The symbol must be a valid symbol name, and the expression must conform to the rules described earlier.

The following are examples of the EQU directive:

```
N27             EQU     27              ;SET N27 TO THE VALUE 27
HERE            EQU     $               ;SET "HERE" TO THE VALUE OF
                                        ;THE LOCATION COUNTER
CR              EQU     0DH             ;SET CR (CARRIAGE RETURN) TO 0DH
MESSAGE:        DB 'This is a message'
LENGTH          EQU     $ - MESSAGE     ;"LENGTH" EQUALS LENGTH OF "MESSAGE"
```

Other Symbol Definition Directives The SET directive is similar to the EQU directive except the symbol may be redefined later, using another SET directive.

STC MCU Limited.

The DATA, IDATA, XDATA, BIT, and CODE directives assign addresses of the corresponding segment type to a symbol. These directives are not essential. A similar effect can be achieved using the EQU directive; if used, however, they evoke powerful type-checking by ASM51. Consider the following two directives and four instructions:

```
FLAG1    EQU   05H
FLAG2    BIT   05H
         SETB  FLAG1
         SETB  FLAG2
         MOV   FLAG1, #0
         MOV   FLAG2, #0
```

The use of FLAG2 in the last instruction in this sequence will generate a "data segment address expected" error message from ASM51. Since FLAG2 is defined as a bit address (using the BIT directive), it can be used in a set bit instruction, but it cannot be used in a move byte instruction. Hence, the error. Even though FLAG1 represents the same value (05H), it was defined using EQU and does not have an associated address space. This is not an advantage of EQU, but rather, a disadvantage. By properly defining address symbols for use in a specific memory space (using the directives BIT, DATA, XDATA,ect.), the programmer takes advantage of ASM51's powerful type-checking and avoids bugs from the misuse of symbols.

STC MCU Limited.

Storage Initialization/Reservation

The storage initialization and reservation directives initialize and reserve space in either word, byte, or bit units. The space reserved starts at the location indicated by the current value of the location counter in the currently active segment. These directives may be preceded by a label. The storage initialization/reservation directives are described below.

DS (Define Storage) The format for the DS (define storage) directive is

```
[label:]  DS    expression
```

The DS directive reserves space in byte units. It can be used in any segment type except BIT. The expression must be a valid assemble-time expression with no forward references and no relocatable or external references. When a DS statement is encountered in a program, the location counter of the current segment is incremented by the value of the expression. The sum of the location counter and the specified expression should not exceed the limitations of the current address space.

The following statement create a 40-byte buffer in the internal data segment:

```
         DSEG   AT      30H     ;PUT IN DATA SEGMENT (ABSOLUTE, INTERNAL)
LENGTH   EQU    40
BUFFER:  DS     LENGRH          ;40 BYTES RESERVED
```

The label BUFFER represents the address of the first location of reserved memory. For this example, the buffer begins at address 30H because "AT 30H" is specified with DSEG. The buffer could be cleared using the following instruction sequence:

```
         MOV    R7, #LENGTH
         MOV    R0, #BUFFER
LOOP:    MOV    @R0, #0
         DJNZ   R7, LOOP
         (continue)
```

To create a 1000-byte buffer in external RAM starting at 4000H, the following directives could be used:

```
XSTART      EQU     4000H
XLENGTH     EQU     1000
            XSEG      AT    XSTART
XBUFFER:    DS  XLENGTH
```

This buffer could be cleared with the following instruction sequence:

```
            MOV     DPTR, #XBUFFER
LOOP:       CLR     A
            MOVX    @DPTR, A
            INC     DPTR
            MOV     A, DPL
            CJNE    A, #LOW (XBUFFER + XLENGTH + 1), LOOP
            MOV     A, DPH
            CJNE    A, #HIGH (XBUFFER + XLENGTH + 1), LOOP
            (continue)
```

This is an excellent example of a powerful use of ASM51's operators and assemble-time expressions. Since an instruction does not exist to compare the data pointer with an immediate value, the operation must be fabricated from available instructions. Two compares are required, one each for the high- and low-bytes of the DPTR. Furthermore, the compare-and-jump-if-not-equal instruction works only with the accumulator or a register, so the data pointer bytes must be moved into the accumulator before the CJNE instruction. The loop terminates only when the data pointer has reached XBUFFER + LENGTH + 1. (The "+1" is needed because the data pointer is incremented after the last MOVX instruction.)

DBIT The format for the DBIT (define bit) directive is,

```
[label:]    DBIT    expression
```

The DBIT directive reserves space in bit units. It can be used only in a BIT segment. The expression must be a valid assemble-time expression with no forward references. When the DBIT statement is encountered in a program, the location counter of the current (BIT) segment is incremented by the value of the expression. Note that in a BIT segment, the basic unit of the location counter is bits rather than bytes. The following directives creat three flags in a absolute bit segment:

```
            BSEG            ;BIT SEGMENT (ABSOLUTE)
KEFLAG:     DBIT    1       ;KEYBOARD STATUS
PRFLAG:     DBIT    1       ;PRINTER STATUS
DKFLAG:     DBIT    1       ;DISK STATUS
```

Since an address is not specified with BSEG in the example above, the address of the flags defined by DBIT could be determined (if one wishes to to so) by examining the symbol table in the .LST or .M51 files. If the definitions above were the first use of BSEG, then KBFLAG would be at bit address 00H (bit 0 of byte address 20H). If other bits were defined previously using BSEG, then the definitions above would follow the last bit defined.

DB (Define Byte) The format for the DB (define byte) directive is,

```
[label:]    DB      expression  [, expression]  […]
```

The DB directive initializes code memory with byte values. Since it is used to actually place data constants in code memory, a CODE segment must be active. The expression list is a series of one or more byte values (each of which may be an expression) separated by commas.

STC MCU Limited.

The DB directive permits character strings (enclosed in single quotes) longer than two characters as long as they are not part of an expression. Each character in the string is converted to the corresponding ASCII code. If a label is used, it is assigned the address of th first byte. For example, the following statements

```
        CSEG  AT      0100H
SQUARES:  DB    0, 1, 4, 9, 16, 25          ;SQUARES OF NUMBERS 0-5
MESSAGE:  DB    'Login:', 0                 ;NULL-TERMINATED CHARACTER STRING
```

When assembled, result in the following hexadecimal memory assignments for external code memory:

Address	Contents
0100	00
0101	01
0102	04
0103	09
0104	10
0105	19
0106	4C
0107	6F
0108	67
0109	69
010A	6E
010B	3A
010C	00

DW (Define Word) The format for the DW (define word) directive is

```
[label:]    DW      expression      [, expression]  […]
```

The DW directive is the same as the DB directive except two memory locations (16 bits) are assigned for each data item. For example, the statements

```
CSEG    AT      200H
DW      $, 'A', 1234H, 2, 'BC'
```

result in the following hexadecimal memory assignments:

Address	Contents
0200	02
0201	00
0202	00
0203	41
0204	12
0205	34
0206	00
0207	02
0208	42
0209	43

Program Linkage

Program linkage directives allow the separately assembled modules (files) to communicate by permitting intermodule references and the naming of modules. In the following discussion, a "module" can be considered a "file." (In fact, a module may encompass more than one file.)

STC MCU Limited.

Public The format for the PUBLIC (public symbol) directive is

```
PUBLIC      symbol  [, symbol]  […]
```

The PUBLIC directive allows the list of specified symbols to known and used outside the currently assembled module. A symbol declared PUBLIC must be defined in the current module. Declaring it PUBLIC allows it to be referenced in another module. For example,

```
PUBLIC  INCHAR, OUTCHR, INLINE, OUTSTR
```

Extrn The format for the EXTRN (external symbol) directive is

```
EXTRN       segment_type  (symbol  [, symbol]  […], …)
```

The EXTRN directive lists symbols to be referenced in the current module that are defined in other modules. The list of external symbols must have a segment type associated with each symbol in the list. (The segment types are CODE, XDATA, DATA, IDATA, BIT, and NUMBER. NUMBER is a type-less symbol defined by EQU.) The segment type indicates the way a symbol may be used. The information is important at link-time to ensure symbols are used properly in different modules.

The PUBLIC and EXTRN directives work together. Consider the two files, MAIN.SRC and MESSAGES. SRC. The subroutines HELLO and GOOD_BYE are defined in the module MESSAGES but are made available to other modules using the PUBLIC directive. The subroutines are called in the module MAIN even though they are not defined there. The EXTRN directive declares that these symbols are defined in another module.

MAIN.SRC:

```
            EXTRN       CODE (HELLO, GOOD_BYE)
            …
            CALL        HELLO
            …
            CALL        GOOD_BYE
            …
            END
```

MESSAGES.SRC:

```
            PUBLIC      HELLO, GOOD_BYE
            …
HELLO:      (begin subroutine)
            …
            RET
GOOD_BYE:   (begin subroutine)
            …
            RET
            …
            END
```

Neither MAIN.SRC nor MESSAGES.SRC is a complete program; they must be assembled separately and linked together to form an executable program. During linking, the external references are resolved with correct addresses inserted as the destination for the CALL instructions.

Name The format for the NAME directive is

```
NAME    module_name
```

STC MCU Limited

All the usual rules for symbol names apply to module names. If a name is not provided, the module takes on the file name (without a drive or subdirectory specifier and without an extension). In the absence of any use of the NAME directive, a program will contain one module for each file. The concept of "modules," therefore, is somewhat cumbersome, at least for relatively small programming problems. Even programs of moderate size (encompassing, for example, several files complete with relocatable segments) needn't use the NAME directive and needn't pay any special attention to the concept of "modules." For this reason, it was mentioned in the definition that a module may be considered a "file," to simplify learning ASM51. However, for very large programs (several thousand lines of code, or more), it makes sense to partition the problem into modules, where, for example, each module may encompass several files containing routines having a common purpose.

Segment Selection Directives

When the assembler encounters a segment selection directive, it diverts the following code or data into the selected segment until another segment is selected by a segment selection directive. The directive may select may select a previously defined relocatable segment or optionally create and select absolute segments.

RSEG (Relocatable Segment) The format for the RSEG (relocatable segment) directive is

```
RSEG        segment_name
```

Where "segment_name" is the name of a relocatable segment previously defined with the SEGMENT directive. RSEG is a "segment selection" directive that diverts subsequent code or data into the named segment until another segment selection directive is encountered.

Selecting Absolute Segments RSEG selects a relocatable segment. An "absolute" segment, on the other hand, is selected using one of the directives:

```
CSEG    (AT  address)
DSEG    (AT  address)
ISEG    (AT  address)
BSEG    (AT  address)
XSEG    (AT  address)
```

These directives select an absolute segment within the code, internal data, indirect internal data, bit, or external data address spaces, respectively. If an absolute address is provided (by indicating "AT address"), the assembler terminates the last absolute address segment, if any, of the specified segment type and creates a new absolute segment starting at that address. If an absolute address is not specified, the last absolute segment of the specified type is continued. If no absolute segment of this type was previously selected and the absolute address is omitted, a new segment is created starting at location 0. Forward references are not allowed and start addresses must be absolute.

Each segment has its own location counter, which is always set to 0 initially. The default segment is an absolute code segment; therefore, the initial state of the assembler is location 0000H in the absolute code segment. When another segment is chosen for the first time, the location counter of the former segment retains the last active value. When that former segment is reselected, the location counter picks up at the last active value. The ORG directive may be used to change the location counter within the currently selected segment.

ASSEMBLER CONTROLS

Assembler controls establish the format of the listing and object files by regulating the actions of ASM51. For the most part, assembler controls affect the look of the listing file, without having any affect on the program itself. They can be entered on the invocation line when a program is assembled, or they can be placed in the source file. Assembler controls appearing in the source file must be preceded with a dollor sign and must begin in column 1.

STC MCU Limited.

There are two categories of assembler controls: primary and general. Primary controls can be placed in the invocation line or at the beginnig of the source program. Only other primary controls may precede a primary control. General controls may be placed anywhere in the source program.

LINKER OPERATION

In developing large application programs, it is common to divide tasks into subprograms or modules containing sections of code (usually subroutines) that can be written separately from the overall program. The term "modular programming" refers to this programming strategy. Generally, modules are relocatable, meaning they are not intended for a specific address in the code or data space. A linking and locating program is needed to combine the modules into one absolute object module that can be executed.

Intel's RL51 is a typical linker/locator. It processes a series of relocatable object modules as input and creates an executable machine language program (PROGRAM, perhaps) and a listing file containing a memory map and symbol table (PROGRAM.M51). This is illustrated in following figure.

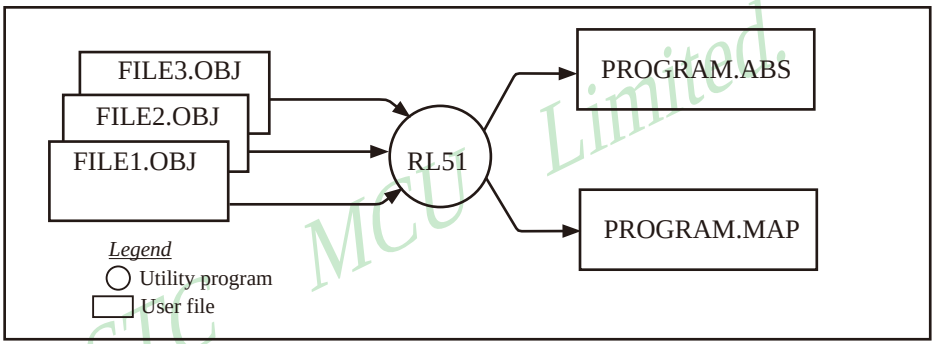

Linker operation

As relocatable modules are combined, all values for external symbols are resolved with values inserted into the output file. The linker is invoked from the system prompt by

RL51 input_list [T0 output_file] [location_controls]

The input_list is a list of relocatable object modules (files) separated by commas. The output_list is the name of the output absolute object module. If none is supplied, it defaults to the name of the first input file without any suffix. The location_controls set start addresses for the named segments.

For example, suppose three modules or files (MAIN.OBJ, MESSAGES.OBJ, and SUBROUTINES.OBJ) are to be combined into an executable program (EXAMPLE), and that these modules each contain two relocatable segments, one called EPROM of type CODE, and the other called ONCHIP of type DATA. Suppose further that the code segment is to be executable at address 4000H and the data segment is to reside starting at address 30H (in internal RAM). The following linker invocation could be used:

```
RS51 MAIN.OBJ, MESSAGES.OBJ, SUBROUTINES.OBJ TO EXAMPLE & CODE
(EPROM (4000H) DATA (ONCHIP (30H))
```

Note that the ampersand character "&" is used as the line continuaton character.

If the program begins at the label START, and this is the first instruction in the MAIN module, then execution begins at address 4000H. If the MAIN module was not linked first, or if the label START is not at the beginning of MAIN, then the program's entry point can be determined by examining the symbol table in the listing file EXAMPLE.M51 created by RL51. By default, EXAMPLE.M51 will contain only the link map. If a symbol table is desired, then each source program must have used the SDEBUG control. The following table shows the assembler controls supported by ASM51.

STC MCU Limited.

Assembler controls supported by ASM51				
NAME	PRIMARY/ GENERAL	DEFAULT	ABBREV.	MEANING
DATE (date)	P	DATE( )	DA	Place string in header (9 char. max.)
DEBUG	P	NODEBUG	DB	Outputs debug symbol information to object file
EJECT	G	not applicable	EJ	Continue listing on next page
ERRORPRINT (file)	P	NOERRORPRINT	EP	Designates a file to receive error messages in addition to the listing file (defauts to console)
NOERRORPRINT	P	NOERRORPRINT	NOEP	Designates that error messages will be printed in listing file only
GEN	G	GENONLY	GO	List only the fully expanded source as if all lines generated by a macro call were already in the source file
GENONLY	G	GENONLY	NOGE	List only the original source text in the listing file
INCLUED(file)	G	not applicable	IC	Designates a file to be included as part of the program
LIST	G	LIST	LI	Print subsequent lines of source code in listing file
NOLIST	G	LIST	NOLI	Do not print subsequent lines of source code in lisitng file
MACRO (men_precent)	P	MACRO(50)	MR	Evaluate and expand all macro calls. Allocate percentage of free memory for macro processing
NOMACRO	P	MACRO(50)	NOMR	Do not evalutate macro calls
MOD51	P	MOD51	MO	Recognize the 8051-specific predefined special function registers
NOMOD51	P	MOD51	NOMO	Do not recognize the 8051-specific predefined special function registers
OBJECT(file)	P	OBJECT(source.OBJ)	OJ	Designates file to receive object code
NOOBJECT	P	OBJECT(source.OBJ)	NOOJ	Designates that no object file will be created
PAGING	P	PAGING	PI	Designates that listing file be broken into pages and each will have a header
NOPAGING	P	PAGING	NOPI	Designates that listing file will contain no page breaks
PAGELENGTH (N)	P	PAGELENGT(60)	PL	Sets maximun number of lines in each page of listing file (range=10 to 65536)
PAGE WIDTH (N)	P	PAGEWIDTH(120)	PW	Set maximum number of characters in each line of listing file (range = 72 to 132)
PRINT(file)	P	PRINT(source.LST)	PR	Designates file to receive source listing
NOPRINT	P	PRINT(source.LST)	NOPR	Designates that no listing file will be created
SAVE	G	not applicable	SA	Stores current control settings from SAVE stack
RESTORE	G	not applicable	RS	Restores control settings from SAVE stack
REGISTERBANK (rb,...)	P	REGISTERBANK(0)	RB	Indicates one or more banks used in program module
NOREGISTER-BANK	P	REGISTERBANK(0)	NORB	Indicates that no register banks are used
SYMBOLS	P	SYMBOLS	SB	Creates a formatted table of all symbols used in program
NOSYMBOLS	P	SYMBOLS	NOSB	Designates that no symbol table is created
TITLE(string)	G	TITLE( )	TT	Places a string in all subsequent page headers (max.60 characters)
WORKFILES (path)	P	same as source	WF	Designates alternate path for temporay workfiles
XREF	P	NOXREF	XR	Creates a cross reference listing of all symbols used in program
NOXREF	P	NOXREF	NOXR	Designates that no cross reference list is created

STC MCU Limited.

MACROS

The macro processing facility (MPL) of ASM51 is a "string replacement" facility. Macros allow frequently used sections of code be defined once using a simple mnemonic and used anywhere in the program by inserting the mnemonic. Programming using macros is a powerful extension of the techniques described thus far. Macros can be defined anywhere in a source program and subsequently used like any other instruction. The syntax for macro definition is

```
%*DEFINE        (call_pattern)        (macro_body)
```

Once defined, the call pattern is like a mnemonic; it may be used like any assembly language instruction by placing it in the mnemonic field of a program. Macros are made distinct from "real" instructions by preceding them with a percent sign, "%". When the source program is assembled, everything within the macro-body, on a character-by-character basis, is substituted for the call-pattern. The mystique of macros is largely unfounded. They provide a simple means for replacing cumbersome instruction patterns with primitive, easy-to-remember mnemonics. The substitution, we reiterate, is on a character-by-character basis—nothing more, nothing less.

For example, if the following macro definition appears at the beginning of a source file,

```
%*DEFINE        (PUSH_DPTR)
                        (PUSH   DPH
                         PUSH   DPL
                        )
```

then the statement

```
%PUSH_DPTR
```

will appear in the .LST file as

```
PUSH    DPH
PUSH    DPL
```

The example above is a typical macro. Since the 8051 stack instructions operate only on direct addresses, pushing the data pointer requires two PUSH instructions. A similar macro can be created to POP the data pointer.

There are several distinct advantages in using macros:

- A source program using macros is more readable, since the macro mnemonic is generally more indicative of the intended operation than the equivalent assembler instructions.
- The source program is shorter and requires less typing.
- Using macros reduces bugs
- Using macros frees the programmer from dealing with low-level details.

The last two points above are related. Once a macro is written and debugged, it is used freely without the worry of bugs. In the PUSH_DPTR example above, if PUSH and POP instructions are used rather than push and pop macros, the programmer may inadvertently reverse the order of the pushes or pops. (Was it the high-byte or low-byte that was pushed first?) This would create a bug. Using macros, however, the details are worked out once—when the macro is written—and the macro is used freely thereafter, without the worry of bugs.

Since the replacement is on a character-by-character basis, the macro definition should be carefully constructed with carriage returns, tabs, ect., to ensure proper alignment of the macro statements with the rest of the assembly language program. Some trial and error is required.

There are advanced features of ASM51's macro-processing facility that allow for parameter passing, local labels, repeat operations, assembly flow control, and so on. These are discussed below.

STC MCU Limited.

Parameter Passing

A macro with parameters passed from the main program has the following modified format:

```
%*DEFINE        (macro_name  (parameter_list))    (macro_body)
```

For example, if the following macro is defined,

```
%*DEFINE        (CMPA#  (VALUE))
          (CJNE    A, #%VALUE, $ + 3
           )
```

then the macro call

```
%CMPA#  (20H)
```

will expand to the following instruction in the .LST file:

```
CJNE     A, #20H, $ + 3
```

Although the 8051 does not have a "compare accumulator" instruction, one is easily created using the CJNE instruction with "$+3" (the next instruction) as the destination for the conditional jump. The CMPA# mnemonic may be easier to remember for many programmers. Besides, use of the macro unburdens the programmer from remembering notational details, such as "$+3."

Let's develop another example. It would be nice if the 8051 had instructions such as

```
JUMP    IF ACCUMULATOR GREATER THAN X
JUMP    IF ACCUMULATOR GREATER THAN OR EQUAL TO X
JUMP    IF ACCUMULATOR LESS THAN X
JUMP    IF ACCUMULATOR LESS THAN OR EQUAL TO X
```

but it does not. These operations can be created using CJNE followed by JC or JNC, but the details are tricky. Suppose, for example, it is desired to jump to the label GREATER_THAN if the accumulator contains an ASCII code greater than "Z" (5AH). The following instruction sequence would work:

```
CJNE     A, #5BH, $÷3
JNC      GREATER_THAN
```

The CJNE instruction subtracts 5BH (i.e., "Z" + 1) from the content of A and sets or clears the carry flag accordingly. CJNE leaves C=1 for accumulator values 00H up to and including 5AH. (Note: 5AH-5BH<0, therefore C=1; but 5BH-5BH=0, therefore C=0.) Jumping to GREATER_THAN on the condition "not carry" correctly jumps for accumulator values 5BH, 5CH, 5DH, and so on, up to FFH. Once details such as these are worked out, they can be simplified by inventing an appropriate mnemonic, defining a macro, and using the macro instead of the corresponding instruction sequence. Here's the definition for a "jump if greater than" macro:

```
%*DEFINE        (JGT (VALUE,  LABEL))
                    (CJNE    A, #%VALUE+1, $+3      ;JGT
                     JNC      %LABEL
                     )
```

To test if the accumulator contains an ASCII code greater than "Z," as just discussed,the macro would be called as

```
%JGT     ('Z', GREATER_THAN)
```

ASM51 would expand this into

```
CJNE     A, #5BH, $+3        ;JGT
JNC      GREATER_THAN
```

The JGT macro is an excellent example of a relevant and powerful use of macros. By using macros, the programmer benefits by using a meaningful mnemonic and avoiding messy and potentially bug-ridden details.

STC MCU Limited.

Local Labels

Local labels may be used within a macro using the following format:

```
%*DEFINE        (macro_name  [(parameter_list)])
                        [LOCAL   list_of_local_labels]    (macro_body)
```

For example, the following macro definition

```
%*DEFINE    (DEC_DPTR)    LOCAL  SKIP
                (DEC     DPL                ;DECREMENT DATA POINTER
                 MOV     A, DPL
                 CJNE    A, #0FFH, %SKIP
                 DEC     DPL
%SKIP:           )
```

would be called as

```
%DEC_DPTR
```

and would be expanded by ASM51 into

```
            DEC     DPL                ;DECREMENT  DATA  POINTER
            MOV     A, DPL
            CJNE    A, #0FFH, SKIP00
            DEC     DPH
SKIP00:
```

Note that a local label generally will not conflict with the same label used elsewhere in the source program, since ASM51 appends a numeric code to the local label when the macro is expanded. Furthermore, the next use of the same local label receives the next numeric code, and so on.

The macro above has a potential "side effect." The accumulator is used as a temporary holding place for DPL. If the macro is used within a section of code that uses A for another purpose, the value in A would be lost. This side effect probably represents a bug in the program. The macro definition could guard against this by saving A on the stack. Here's an alternate definition for the DEC_DPTR macro:

```
%*DEFINE        (DEC_DPTR)      LOCAL SKIP
                  (PUSHACC
                 DEC     DPL                ;DECREMENT DATA POINTER
                 MOV     A, DPL
                 CJNE    A, #0FFH, %SKIP
                 DEC     DPH
%SKIP:           POP     ACC
                 )
```

Repeat Operations

This is one of several built-in (predefined) macros. The format is

```
%REPEAT         (expression)         (text)
```

For example, to fill a block of memory with 100 NOP instructions,

```
%REPEAT    (100)
 (NOP
 )
```

STC MCU Limited.

Control Flow Operations

The conditional assembly of section of code is provided by ASM51's control flow macro definition. The format is

```
%IF  (expression)   THEN  (balanced_text)
[ELSE     (balanced_text)]  FI
```

For example,

```
INTRENAL        EQU     1       ;1 = 8051 SERIAL I/O DRIVERS
                                ;0 = 8251 SERIAL I/O DRIVERS
                .
                .
                %IF (INTERNAL) THEN
(INCHAR:        .               ;8051 DRIVERS
                .
OUTCHR:         .
                .
                ) ELSE
(INCHAR:        .               ;8251 DRIVERS
                .
OUTCHR:         .
                .
                )
```

In this example, the symbol INTERNAL is given the value 1 to select I/O subroutines for the 8051's serial port, or the value 0 to select I/O subroutines for an external UART, in this case the 8251. The IF macro causes ASM51 to assemble one set of drivers and skip over the other. Elsewhere in the program, the INCHAR and OUTCHR subroutines are used without consideration for the particular hardware configuration. As long as the program as assembled with the correct value for INTERNAL, the correct subroutine is executed.

STC MCU Limited.

Appendix B: 8051 C Programming

ADVANTAGES AND DISADVANTAGES OF 8051 C

The advantages of programming the 8051 in C as compared to assembly are:

- Offers all the benefits of high-level, structured programming languages such as C, including the ease of writing subroutines
- Often relieves the programmer of the hardware details that the complier handles on behalf of the programmer
- Easier to write, especially for large and complex programs
- Produces more readable program source codes

Nevertheless, 8051 C, being very similar to the conventional C language, also suffers from the following disadvantages:

- Processes the disadvantages of high-level, structured programming languages.
- Generally generates larger machine codes
- Programmer has less control and less ability to directly interact with hardware

To compare between 8051 C and assembly language, consider the solutions to the Example—Write a program using Timer 0 to create a 1KHz square wave on P1.0.
A solution written below in 8051 C language:

```
sbit portbit = P1^0;            /*Use variable portbit to refer to P1.0*/
main ( )
{
TMOD = 1;
while (1)
       {
        TH0 = 0xFE;
        TL0 = 0xC;
        TR0 = 1;
        while (TF0 !=1);
        TR0 = 0;
        TF0 = 0;
        portbit = !(P1.^0);
        }
}
```

A solution written below in assembly language:

```
        ORG     8100H
        MOV     TMOD, #01H      ;16-bit timer mode
LOOP:   MOV     TH0, #0FEH      ;-500 (high byte)
        MOV     TL0, #0CH       ;-500 (low byte)
        SETB    TR0             ;start timer
WAIT:   JNB     TF0, WAIT       ;wait for overflow
        CLR     TR0             ;stop timer
        CLR     TF0             ;clear timer overflow flag
        CPL     P1.0            ;toggle port bit
        SJMP    LOOP            ;repeat
        END
```

STC MCU Limited.

Notice that both the assembly and C language solutions for the above example require almost the same number of lines. However, the difference lies in the readability of these programs. The C version seems more human than assembly, and is hence more readable. This often helps facilitate the human programmer's efforts to write even very complex programs. The assembly language version is more closely related to the machine code, and though less readable, often results in more compact machine code. As with this example, the resultant machine code from the assembly version takes 83 bytes while that of the C version requires 149 bytes, an increase of 79.5%!

The human programmer's choice of either high-level C language or assembly language for talking to the 8051, whose language is machine language, presents an interesting picture, as shown in following figure.

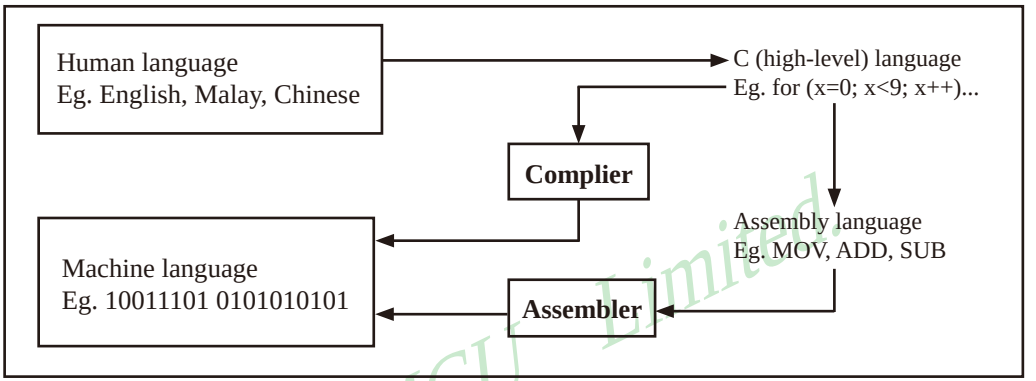

Conversion between human, high-level, assembly, and machine language

STC MCU Limited

8051 C COMPILERS

We saw in the above figure that a complier is needed to convert programs written in 8051 C language into machine language, just as an assembler is needed in the case of programs written in assembly language. A complier basically acts just like an assembler, except that it is more complex since the difference between C and machine language is far greater than that between assembly and machine language. Hence the complier faces a greater task to bridge that difference.

Currently, there exist various 8051 C complier, which offer almost similar functions. All our examples and programs have been compiled and tested with Keil's µ Vision 2 IDE by Keil Software, an integrated 8051 program development envrionment that includes its C51 cross compiler for C. A cross compiler is a compiler that normally runs on a platform such as IBM compatible PCs but is meant to compile programs into codes to be run on other platforms such as the 8051.

DATA TYPES

8051 C is very much like the conventional C language, except that several extensions and adaptations have been made to make it suitable for the 8051 programming environment. The first concern for the 8051 C programmer is the data types. Recall that a data type is something we use to store data. Readers will be familiar with the basic C data types such as int, char, and float, which are used to create variables to store integers, characters, or floating-points. In 8051 C, all the basic C data types are supported, plus a few additional data types meant to be used specifically with the 8051.

The following table gives a list of the common data types used in 8051 C. The ones in bold are the specific 8051 extensions. The data type **bit** can be used to declare variables that reside in the 8051's bit-addressable locations (namely byte locations 20H to 2FH or bit locations 00H to 7FH). Obviously, these bit variables can only store bit values of either 0 or 1. As an example, the following C statement:

```
bit  flag = 0;
```

declares a bit variable called flag and initializes it to 0.

Data types used in 8051 C language

Data Type	Bits	Bytes	Value Range
bit	1		0 to 1
signed char	8	1	-128 to +127
unsigned char	8	1	0 to 255
enum	16	2	-32768 to +32767
signed short	16	2	-32768 to +32767
unsigned short	16	2	0 to 65535
signed int	16	2	-32768 to +32767
unsigned int	16	2	0 to 65535
signed long	32	4	-2,147,483,648 to +2,147,483,647
unsigned long	32	4	0 to 4,294,967,295
float	32	4	±1.175494E-38 to ±3.402823E+38
sbit	1		0 to 1
sfr	8	1	0 to 255
sfr16	16	2	0 to 65535

STC MCU Limited.

The data type **sbit** is somewhat similar to the bit data type, except that it is normally used to declare 1-bit variables that reside in special function registes (SFRs). For example:

```
sbit    P = 0xD0;
```

declares the **sbit** variable P and specifies that it refers to bit address D0H, which is really the LSB of the PSW SFR. Notice the difference here in the usage of the assignment ("=") operator. In the context of **sbit** declarations, it indicatess what address the **sbit** variable resides in, while in **bit** declarations, it is used to specify the initial value of the **bit** variable.

Besides directly assigning a bit address to an **sbit** variable, we could also use a previously defined **sfr** variable as the base address and assign our **sbit** variable to refer to a certain bit within that **sfr**. For example:

```
sfr     PSW = 0xD0;
sbit    P = PSW^0;
```

This declares an **sfr** variable called PSW that refers to the byte address D0H and then uses it as the base address to refer to its LSB (bit 0). This is then assigned to an **sbit** variable, P. For this purpose, the carat symbol (^) is used to specify bit position 0 of the PSW.

A third alternative uses a constant byte address as the base address within which a certain bit is referred. As an illustration, the previous two statements can be replaced with the following:

```
sbit    P = 0xD0 ^ 0;
```

Meanwhile, the **sfr** data type is used to declare byte (8-bit) variables that are associated with SFRs. The statement:

```
sfr     IE = 0xA8;
```

declares an **sfr** variable IE that resides at byte address A8H. Recall that this address is where the Interrupt Enable (IE) SFR is located; therefore, the sfr data type is just a means to enable us to assign names for SFRs so that it is easier to remember.

The **sfr16** data type is very similar to **sfr** but, while the **sfr** data type is used for 8-bit SFRs, **sfr16** is used for 16-bit SFRs. For example, the following statement:

```
sfr16   DPTR = 0x82;
```

declares a 16-bit variable DPTR whose lower-byte address is at 82H. Checking through the 8051 architecture, we find that this is the address of the DPL SFR, so again, the **sfr16** data type makes it easier for us to refer to the SFRs by name rather than address. There's just one thing left to mention. When declaring **sbit**, **sfr**, or **sfr16** variables, remember to do so outside main, otherwise you will get an error.

In actual fact though, all the SFRs in the 8051, including the individual flag, status, and control bits in the bit-addressable SFRs have already been declared in an include file, called reg51.h, which comes packaged with most 8051 C compilers. By using reg51.h, we can refer for instance to the interrupt enable register as simply IE rather than having to specify the address A8H, and to the data pointer as DPTR rather than 82H. All this makes 8051 C programs more human-readable and manageable. The contents of reg51.h are listed below.

```
/*--------------------------------------------------------------------------------------------------------------
REG51.H
Header file for generic 8051 microcontroller.
--------------------------------------------------------------------------------------------------------------*/

/* BYTE Register */
sfr     P0      = 0x80;
sfr     P1      = 0x90;
sfr     P2      = 0xA0;
sfr     P3      = 0xB0;
sfr     PSW     = 0xD0;
sfr     ACC     = 0xE0;
sfr     B       = 0xF0;
sfr     SP      = 0x81;
sfr     DPL     = 0x82;
sfr     DPH     = 0x83;
sfr     PCON    = 0x87;
sfr     TCON    = 0x88;
sfr     TMOD    = 0x89;
sfr     TL0     = 0x8A;
sfr     TL1     = 0x8B;
sfr     TH0     = 0x8C;
sfr     TH1     = 0x8D;
sfr     IE      = 0xA8;
sfr     IP      = 0xB8;
sfr     SCON    = 0x98;
sfr     SBUF    = 0x99;
/* BIT Register */
/* PSW */
sbit    CY      = 0xD7;
sbit    AC      = 0xD6;
sbit    F0      = 0xD5;
sbit    RS1     = 0xD4;
sbit    RS0     = 0xD3;
sbit    OV      = 0xD2;
sbit    P       = 0xD0;
/* TCON */
sbit    TF1     = 0x8F;
sbit    TR1     = 0x8E;
sbit    TF0     = 0x8D;
sbit    TR0     = 0x8C;
sbit    IE1     = 0x8B;
sbit    IT1     = 0x8A;
sbit    IE0     = 0x89;
sbit    IT0     = 0x88;
/* IE */
sbit    EA      = 0xAF;
sbit    ES      = 0xAC;
sbit    ET1     = 0xAB;
sbit    EX1     = 0xAA;
sbit    ET0     = 0xA9;
sbit    EX0     = 0xA8;
/* IP */
sbit    PS      = 0xBC;
sbit    PT1     = 0xBB;
sbit    PX1     = 0xBA;
sbit    PT0     = 0xB9;
sbit    PX0     = 0xB8;
/* P3 */
sbit    RD      = 0xB7;
sbit    WR      = 0xB6;
sbit    T1      = 0xB5;
sbit    T0      = 0xB4;
sbit    INT1    = 0xB3;
sbit    INT0    = 0xB2;
sbit    TXD     = 0xB1;
sbit    RXD     = 0xB0;
/* SCON */
sbit    SM0     = 0x9F;
sbit    SM1     = 0x9E;
sbit    SM2     = 0x9D;
sbit    REN     = 0x9C;
sbit    TB8     = 0x9B;
sbit    RB8     = 0x9A;
sbit    TI      = 0x99;
sbit    RI      = 0x98;
```

STC MCU Limited

MEMORY TYPES AND MODELS

The 8051 has various types of memory space, including internal and external code and data memory. When declaring variables, it is hence reasonable to wonder in which type of memory those variables would reside. For this purpose, several memory type specifiers are available for use, as shown in following table.

Memory types used in 8051 C language	
Memory Type	Description (Size)
code	Code memory (64 Kbytes)
data	Directly addressable internal data memory (128 bytes)
idata	Indirectly addressable internal data memory (256 bytes)
bdata	Bit-addressable internal data memory (16 bytes)
xdata	External data memory (64 Kbytes)
pdata	Paged external data memory (256 bytes)

The first memory type specifier given in above table is **code**. This is used to specify that a variable is to reside in code memory, which has a range of up to 64 Kbytes. For example:

```
char    code    errormsg[ ] = "An error occurred" ;
```

declares a char array called errormsg that resides in code memory.

If you want to put a variable into data memory, then use either of the remaining five data memory specifiers in above table. Though the choice rests on you, bear in mind that each type of data memory affect the speed of access and the size of available data memory. For instance, consider the following declarations:

```
signed int  data  num1;
bit bdata   numbit;
unsigned int  xdata  num2;
```

The first statement creates a signed int variable num1 that resides in inernal **data** memory (00H to 7FH). The next line declares a bit variable numbit that is to reside in the bit-addressable memory locations (byte addresses 20H to 2FH), also known as **bdata**. Finally, the last line declares an unsigned int variable called num2 that resides in external data memory, **xdata**. Having a variable located in the directly addressable internal data memory speeds up access considerably; hence, for programs that are time-critical, the variables should be of type **data**. For other variants such as 8052 with internal data memory up to 256 bytes, the **idata** specifier may be used. Note however that this is slower than data since it must use indirect addressing. Meanwhile, if you would rather have your variables reside in external memory, you have the choice of declaring them as **pdata** or **xdata**. A variable declared to be in **pdata** resides in the first 256 bytes (a page) of external memory, while if more storage is required, **xdata** should be used, which allows for accessing up to 64 Kbytes of external data memory.

What if when declaring a variable you forget to explicitly specify what type of memory it should reside in, or you wish that all variables are assigned a default memory type without having to specify them one by one? In this case, we make use of **memory models**. The following table lists the various memory models that you can use.

Memory models used in 8051 C language	
Memory Model	Description
Small	Variables default to the internal data memory (data)
Compact	Variables default to the first 256 bytes of external data memory (pdata)
Large	Variables default to external data memory (xdata)

STC MCU Limited.

A program is explicitly selected to be in a certain memory model by using the C directive, #pragma. Otherwise, the default memory model is **small**. It is recommended that programs use the small memory model as it allows for the fastest possible access by defaulting all variables to reside in internal data memory.

The **compact** memory model causes all variables to default to the first page of external data memory while the **large** memory model causes all variables to default to the full external data memory range of up to 64 Kbytes.

ARRAYS

Often, a group of variables used to store data of the same type need to be grouped together for better readability. For example, the ASCII table for decimal digits would be as shown below.

ASCII table for decimal digits	
Decimal Digit	ASCII Code In Hex
0	30H
1	31H
2	32H
3	33H
4	34H
5	35H
6	36H
7	37H
8	38H
9	39H

STC MCU Limited.

To store such a table in an 8051 C program, an array could be used. An array is a group of variables of the same data type, all of which could be accessed by using the name of the arrary along with an appropriate index.

The array to store the decimal ASCII table is:

```
int     table [10] =
{0x30, 0x31, 0x32, 0x33, 0x34, 0x35, 0x36, 0x37, 0x38, 0x39};
```

Notice that all the elements of an array are separated by commas. To access an individul element, an index starting from 0 is used. For instance, table[0] refers to the first element while table[9] refers to the last element in this ASCII table.

STRUCTURES

Sometime it is also desired that variables of different data types but which are related to each other in some way be grouped together. For example, the name, age, and date of birth of a person would be stored in different types of variables, but all refer to the person's personal details. In such a case, a structure can be declared. A structure is a group of related variables that could be of different data types. Such a structure is declared by:

```
struct   person  {
                    char name;
                    int age;
                    long DOB;
                    };
```

Once such a structure has been declared, it can be used like a data type specifier to create structure variables that have the member's name, age, and DOB. For example:

```
struct   person   grace = {"Grace", 22, 01311980};
```

would create a structure variable grace to store the name, age, and data of birth of a person called Grace. Then in order to access the specific members within the person structure variable, use the variable name followed by the dot operator (.) and the member name. Therefore, grace.name, grace.age, grace.DOB would refer to Grace's name, age, and data of birth, respectively.

POINTERS

When programming the 8051 in assembly, sometimes register such as R0, R1, and DPTR are used to store the addresses of some data in a certain memory location. When data is accessed via these registers, indirect addressing is used. In this case, we say that R0, R1, or DPTR are used to point to the data, so they are essentially pointers.

Correspondingly in C, indirect access of data can be done through specially defined pointer variables. Pointers are simply just special types of variables, but whereas normal variables are used to directly store data, pointer variables are used to store the addresses of the data. Just bear in mind that whether you use normal variables or pointer variables, you still get to access the data in the end. It is just whether you go directly to where it is stored and get the data, as in the case of normal variables, or first consult a directory to check the location of that data before going there to get it, as in the case of pointer variables.
Declaring a pointer follows the format:

```
data_type     *pointer_name;
```

where

data_type	refers to which type of data that the pointer is pointing to
*	denotes that this is a pointer variable
pointer_name	is the name of the pointer

As an example, the following declarations:

```
int   * numPtr
int   num;
numPtr = &num;
```

first declares a pointer variable called numPtr that will be used to point to data of type int. The second declaration declares a normal variable and is put there for comparison. The third line assigns the address of the num variable to the numPtr pointer. The address of any variable can be obtained by using the address operator, &, as is used in this example. Bear in mind that once assigned, the numPtr pointer contains the address of the num variable, not the value of its data.

The above example could also be rewritten such that the pointer is straightaway initialized with an address when it is first declared:

```
int   num;
int   * numPtr = &num;
```

In order to further illustrate the difference between normal variables and pointer variables, consider the following, which is not a full C program but simply a fragment to illustrate our point:

```
int   num = 7;
int   * numPtr = &num;
printf ("%d\n", num);
printf ("%d\n", numPtr);
printf ("%d\n", &num);
printf ("%d\n", *numPtr);
```

STC MCU Limited.

The first line declare a normal variable, num, which is initialized to contain the data 7. Next, a pointer variable, numPtr, is declared, which is initialized to point to the address of num. The next four lines use the printf( ) function, which causes some data to be printed to some display terminal connected to the serial port. The first such line displays the contents of the num variable, which is in this case the value 7. The next displays the contents of the numPtr pointer, which is really some weird-looking number that is the address of the num variable. The third such line also displays the addresss of the num variable because the address operator is used to obtain num's address. The last line displays the actual data to which the numPtr pointer is pointing, which is 7. The * symbol is called the indirection operator, and when used with a pointer, indirectly obtains the data whose address is pointed to by the pointer. Therefore, the output display on the terminal would show:

7
13452 (or some other weird-looking number)
13452 (or some other weird-looking number)
7

A Pointer's Memory Type

Recall that pointers are also variables, so the question arises where they should be stored. When declaring pointers, we can specify different types of memory areas that these pointers should be in, for example:

```
int  * xdata numPtr = & num;
```

This is the same as our previous pointer examples. We declare a pointer numPtr, which points to data of type int stored in the num variable. The difference here is the use of the memory type specifier **xdata** after the *. This is specifies that pointer numPtr should reside in external data memory (**xdata**), and we say that the pointer's memory type is **xdata**.

STC MCU Limited

Typed Pointers

We can go even further when declaring pointers. Consider the example:

```
int  data  * xdata  numPtr = &num;
```

The above statement declares the same pointer numPtr to reside in external data memory (**xdata**), and this pointer points to data of type int that is itself stored in the variable num in internal data memory (**data**). The memory type specifier, **data**, before the * specifies the *data memory type* while the memory type specifier, **xdata**, after the * specifies the pointer memory type.

Pointer declarations where the data memory types are explicitly specified are called typed pointers. Typed pointers have the property that you specify in your code where the data pointed by pointers should reside. The size of typed pointers depends on the data memory type and could be one or two bytes.

Untyped Pointers

When we do not explicitly state the data memory type when declaring pointers, we get untyped pointers, which are generic pointers that can point to data residing in any type of memory. Untyped pointers have the advantage that they can be used to point to any data independent of the type of memory in which the data is stored. All untyped pointers consist of 3 bytes, and are hence larger than typed pointers. Untyped pointers are also generally slower because the data memory type is not determined or known until the complied program is run at runtime. The first byte of untyped pointers refers to the data memory type, which is simply a number according to the following table. The second and third bytes are,respectively,the higher-order and lower-order bytes of the address being pointed to.

An untyped pointer is declared just like normal C, where:

```
int  * xdata  numPtr = &num;
```

does not explicitly specify the memory type of the data pointed to by the pointer. In this case, we are using untyped pointers.

Data memory type values stored in first byte of untyped pointers	
Value	Data Memory Type
1	idata
2	xdata
3	pdata
4	data/bdata
5	code

FUNCTIONS

In programming the 8051 in assembly, we learnt the advantages of using subroutines to group together common and frequently used instructions. The same concept appears in 8051 C, but instead of calling them subroutines, we call them **functions**. As in conventional C, a function must be declared and defined. A function definition includes a list of the number and types of inputs, and the type of the output (return type), puls a description of the internal contents, or what is to be done within that function.

The format of a typical function definition is as follows:

```
return_type    function_name (arguments)    [memory]  [reentrant]  [interrupt]  [using]
{
        …
}
```

where

return_type	refers to the data type of the return (output) value
function_name	is any name that you wish to call the function as
arguments	is the list of the type and number of input (argument) values
memory	refers to an explicit memory model (small, compact or large)
reentrant	refers to whether the function is reentrant (recursive)
interrupt	indicates that the function is acctually an ISR
using	explicitly specifies which register bank to use

Consider a typical example, a function to calculate the sum of two numbers:

```
int  sum (int a, int b)
{
        return  a + b;
}
```

This function is called sum and takes in two arguments, both of type int. The return type is also int, meaning that the output (return value) would be an int. Within the body of the function, delimited by braces, we see that the return value is basically the sum of the two agruments. In our example above, we omitted explicitly specifying the options: memory, reentrant, interrupt, and using. This means that the arguments passed to the function would be using the default small memory model, meaning that they would be stored in internal data memory. This function is also by default non-recursive and a normal function, not an ISR. Meanwhile, the default register bank is bank 0.

Parameter Passing

In 8051 C, parameters are passed to and from functions and used as function arguments (inputs). Nevertheless, the technical details of where and how these parameters are stored are transparent to the programmer, who does not need to worry about these techinalities. In 8051 C, parameters are passed through the register or through memory. Passing parameters through registers is faster and is the default way in which things are done. The registers used and their purpose are described in more detail below.

STC MCU Limited.

Registers used in parameter passing				
Number of Argument	Char / 1-Byte Pointer	INT / 2-Byte Pointer	Long/Float	Generic Pointer
1	R7	R6 & R7	R4–R7	R1–R3
2	R5	R4 &R5	R4–R7	
3	R3	R2 & R3		

Since there are only eight registers in the 8051, there may be situations where we do not have enough registers for parameter passing. When this happens, the remaining parameters can be passed through fixed memory loacations. To specify that all parameters will be passed via memory, the NOREGPARMs control directive is used. To specify the reverse, use the REGPARMs control directive.

Return Values

Unlike parameters, which can be passed by using either registers or memory locations, output values must be returned from functions via registers. The following table shows the registers used in returning different types of values from functions.

Registers used in returning values from functions		
Return Type	Register	Description
bit	Carry Flag (C)	
char/unsigned char/1-byte pointer	R7	
int/unsigned int/2-byte pointer	R6 & R7	MSB in R6, LSB in R7
long/unsigned long	R4–R7	MSB in R4, LSB in R7
float	R4–R7	32-bit IEEE format
generic pointer	R1–R3	Memory type in R3, MSB in R2, LSB in R1

STC MCU Limited.

Appendix C: STC15 series Electrical Characteristic

Absolute Maximum Ratings

Parameter	Symbol	Min	Max	Unit
Srotage temperature	TST	-55	+125	℃
Operating temperature (I)	TA	-40	+85	℃
Operating temperature (C)	TA	0	+70	℃
DC power supply (5V)	VDD - VSS	-0.3	+5.5	V
DC power supply (3V)	VDD - VSS	-0.3	+3.6	V
Voltage on any pin	-	-0.3	VCC + 0.3	V

DC Specification (5V MCU)

Sym	Parameter	Specification				Test Condition
		Min.	Typ	Max.	Unit	
VDD	Operating Voltage	3.3	5.0	5.5	V	
IPD	Power Down Current	-	< 0.1	-	uA	5V
IIDL	Idle Current	-	3.0	-	mA	5V
ICC	Operating Current	-	4	20	mA	5V
VIL1	Input Low (P0,P1,P2,P3)	-	-	0.8	V	5V
VIH1	Input High (P0,P1,P2,P3)	2.0	-	-	V	5V
VIH2	Input High (RESET)	2.2	-	-	V	5V
IOL1	Sink Current for output low (P0,P1,P2,P3)	-	20	-	mA	5V@Vpin=0.45V
IOH1	Sourcing Current for output high (P0,P1,P2,P3) (Quasi-output)	200	270	-	uA	5V
IOH2	Sourcing Current for output high (P0,P1,P2,P3) (Push-Pull, Strong-output)	-	20	-	mA	5V@Vpin=2.4V
IIL	Logic 0 input current (P0,P1,P2,P3)	-	-	50	uA	Vpin=0V
ITL	Logic 1 to 0 transition current (P0,P1,P2,P3)	100	270	600	uA	Vpin=2.0V

STC MCU Limited

DC Specification (3V MCU)

Sym	Parameter	Specification				Test Condition
		Min.	Typ	Max.	Unit	
VDD	Operating Voltage	2.4	3.3	3.6	V	
IPD	Power Down Current	-	<0.1	-	uA	3.3V
IIDL	Idle Current	-	2.0	-	mA	3.3V
ICC	Operating Current	-	4	10	mA	3.3V
VIL1	Input Low (P0,P1,P2,P3)	-	-	0.8	V	3.3V
VIH1	Input High (P0,P1,P2,P3)	2.0	-	-	V	3.3V
VIH2	Input High (RESET)	2.2	-	-	V	3.3V
IOL1	Sink Current for output low (P0,P1,P2,P3)	-	20	-	mA	3.3V@Vpin=0.45V
IOH1	Sourcing Current for output high (P0,P1,P2,P3) (Quasi-output)	140	170	-	uA	3.3V
IOH2	Sourcing Current for output high (P0,P1,P2,P3) (Push-Pull)	-	20	-	mA	3.3V
IIL	Logic 0 input current (P0,P1,P2,P3)	-	8	50	uA	Vpin=0V
ITL	Logic 1 to 0 transition current (P0,P1,P2,P3)	-	110	600	uA	Vpin=2.0V

Appendix D: Indirect addressing inner 256B RAM

```
;/*---------------------------------------------------------------------------------------------------*/
;/* --- STC MCU International Limited ---------------------------------------------------------------*/
;/* --- STC 1T Series MCU  the inner 256B normal RAM (indirect addressing) Demo ----------*/
;/* --- Mobile: (86)13922805190 ---------------------------------------------------------------*/
;/* --- Fax: 86-755-82905966 ------------------------------------------------------------------*/
;/* --- Tel: 86-755-82948412 ------------------------------------------------------------------*/
;/* --- Web: www.STCMCU.com -------------------------------------------------------------------*/
;/* If you want to use the program or the program referenced in the  ----------------------------*/
;/* article, please specify in which data and procedures from STC    ----------------------------*/
;/*---------------------------------------------------------------------------------------------------*/

TEST_CONST      EQU     5AH
;TEST_RAM       EQU     03H
        ORG     0000H
        LJMP    INITIAL

        ORG     0050H
INITIAL:
        MOV     R0,     #253

        MOV     R1,     #3H
TEST_ALL_RAM:
        MOV     R2,     #0FFH
TEST_ONE_RAM:
        MOV     A,      R2
        MOV     @R1,    A
        CLR     A
        MOV     A,      @R1

        CJNE    A,      2H,     ERROR_DISPLAY
        DJNZ    R2,     TEST_ONE_RAM
        INC     R1
        DJNZ    R0,     TEST_ALL_RAM
OK_DISPLAY:
        MOV     P1,     #11111110B
Wait1:
        SJMP    Wait1

ERROR_DISPLAY:
        MOV     A,      R1
        MOV     P1,     A
Wait2:
        SJMP    Wait2
        END
```

STC MCU Limited.

Appendix E: Using Serial port to Expand I/O Ports

STC15 series MCU serial port mode0 can be used for expand IO if UART is free in your application. UART Mode0 is a synchronous shift register, the baudrate is fixed at fosc/12, RXD pin (P3.0) is the data I/O port, and TXD pin (P3.1) is clock output port, data width is 8 bits, always sent / received the lowest bit at first.

(1) Using 74HC165 expand parallel input ports

Please refer to the following circuit which using 2 pcs 74HC165 to expand 16 input I/Os

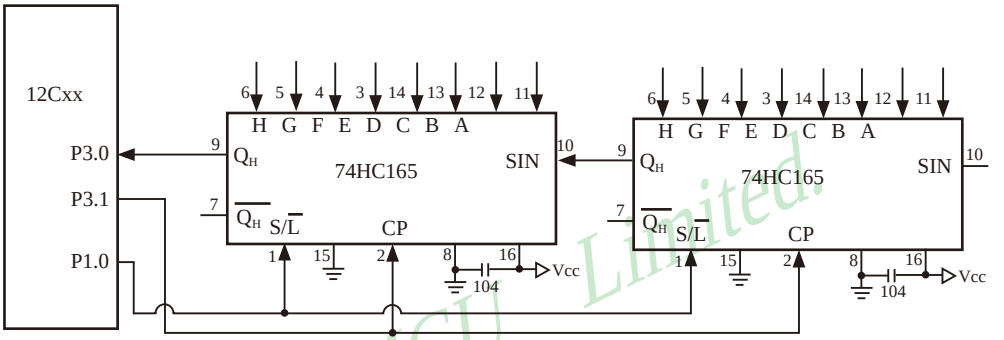

74HC165 is a 8-bit parallel input shift register, when S/L (Shift/Load) pin is falling to low level, the parallel port data is read into internal register, and now, if S/L is raising to high and ClockDisable pin (15 pin) is low level, then clock signal from CP pin is enable. At this time register data will be output from the Dh pin (9 pin) with the clock input.

```
        …
        MOV R7,#05H                 ;read 5 groups data
        MOV R0,#20H                 ;set buffer address
START:  CLR P1.0                    ;S/L = 0, load port data
        SETB P1.0                   ;S/L = 1, lock data and enable clock
        MOV R1,#02H                 ;2 bytes per group
RXDAT:MOV SCON,#00010000B           ;set serial as mode 0 and enable receive data
WAIT:   JNB RI,WAIT                 ;wait for receive complete
        CLR RI                      ;clear receive complete flag
        MOV A,SBUF                  ;read data to ACC
        MOV @R0,A                   ;save data to buffer
        INC R0                      ;modify buffer ptr
        DJNZ R1,RXDAT               ;read next byte
        DJNZ R7,START               ;read next group
        …
```

STC MCU Limited.

(2) Using 74HC164 expand parallel output ports

Please refer to the following circuit which using 2 pcs 74HC164 to expand 16 output I/Os

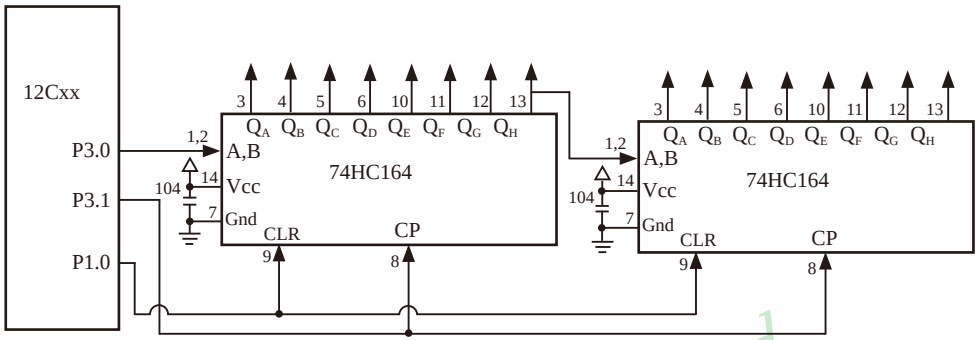

When serial port is working in MODE0, the serial data is input/output from RXD(P3.0) pin and serial clock is output from TXD(P3.1). Serial data is always starting transmission from the lowest bit.

```
        …
START:  MOV R7,#02H             ;output 2 bytes data
        MOV R0,#30H             ;set buffer address
        MOV SCON,#00000000B     ;set serial as mode 0
SEND:   MOV A,@R0               ;read data from buffer
        MOV SBUF,A              ;start send data
WAIT:   JNB TI,WAIT             ;wait for send complete
        CLR TI                  ;clear send complete flag
        INC R0                  ;modify buffer ptr
        DJNZ R7,SEND            ;send next data
        …
```

STC MCU Limited.

Appendix F: LED Driven by an I/O port and Key Scan

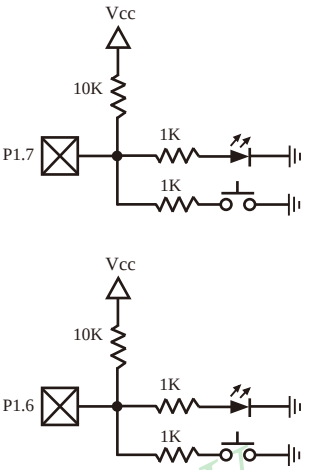

STC MCU Limited.

It can save a lot of I/O ports that STC15F2K60S2 MCU I/O ports can used as the LED drivers and key detection concurrently because of their feature which they can be set to the weak pull , the strong pull (push-pull) output, only input (high impedance), open drain four modes.

When driving the LED, the I/O port should be set as strongly push-pull output, and the LED will be lighted when the output is high.

When testing the keys, the I/O port should be set as weak pull input, and then reading the status of external ports can test the keys.

Appendix G: Notes of STC15 replacing Standard 8051

STC15 series MCU Timer0/Timer1/UART is fully compatible with the traditional 8051 MCU.After power on reset, the default input clock source is the divider 12 of system clock frequency, and UART baudrate generator defauts to Timer 1 and also can choose Timer 2 as its baud-rate generator. MCU instruction execution speed is faster than the traditional 8051 MCU 8 ~ 12 times in the same working environment,so software delay programs need to be adjusted.

ALE

ALE pin is an disturbance source when traditional 8051's system clock frequency is too high. STC89xx series MCU add ALEOFFF bit in AUXR register. While STC15 series MCU directly disable ALE pin dividing 6 the system clock output, and can remove ALE disturbance thoroughly. Please compare the following two registers.

AUXR register of STC89xx series

Mnemonic	Add	Name	Bit7	Bit6	Bit5	Bit4	Bir3	Bit2	Bit1	Bit0	Reset Value
AUXR	8EH	Auxiliary register 0	-	-	-	-	-	-	EXTRAM	ALEOFF	xxxx,xx00

AUXR register of STC15 series

Mnemonic	Add	Name	Bit7	Bit6	Bit5	Bit4	Bir3	Bit2	Bit1	Bit0	Reset Value
AUXR	8EH	Auxiliary register	T0x12	T1x12	UART_M0x6	T2R	T2_C/$\overline{T}$	T2x12	EXTRAM	S1ST2	0000,0000

STC MCU Limited.

PSEN

Traditional 8051 execute external program through the PSEN signal. STC15 series is system MCU concept, integrated high-capacity internal program memory, do not need external program memory expansion generally, so have no PSEN signal.

General Qusi-Bidirectional I/O

Traditional 8051 access I/O (signal transition or read status) timing is 12 clocks, STC15 series MCU is 4 clocks. When you need to read an external signal, if internal output a rising edge signal, for the traditional 8051, this process is 12 clocks, you can read at once, but for STC15F2K60S2 series MCU, this process is 4 clocks, when internal instructions is complete but external signal is not ready, so you must delay 1~2 nop operation.

Port drive capability

STC15 series I/O port sink drive current is 20mA, has a strong drive capability, the port is not burn out when drive high current generally. STC89 series I/O port sink drive current is only 6mA, is not enough to drive high current. For the high current drive applications, it is strongly recommended to use STC15 series MCU.

WatchDog

STC15 series MCU's watch dog timer control register (WDT_CONTR) is location at C1H, add watch dog reset flag.

STC15F2K60S2 series WDT_CONTR (C1H)

Mnemonic	Add	Name	Bit7	Bit6	Bit5	Bit4	Bir3	Bit2	Bit1	Bit0	Reset Value
WDT_CONTR	C1h	Wact-Dog-Timer Control register	WDT_FLAG	-	EN_WDT	CLR_WDT	IDL_WDT	PS2	PS1	PS0	xx00,0000

STC89 series WDT_CONTR (E1H)

Mnemonic	Add	Name	Bit7	Bit6	Bit5	Bit4	Bir3	Bit2	Bit1	Bit0	Reset Value
WDT_CONTR	E1h	Wact-Dog-Timer Control register	-	-	EN_WDT	CLR_WDT	IDL_WDT	PS2	PS1	PS0	xx00,0000

STC15 series MCU auto enable watch dog timer after ISP upgrade, but not in STC89 series, so STC15 series's watch dog is more reliable.

EEPROM

SFR associated with EEPROM

Mnemonic	STC12Cxx	STC89xx	Description
	Address		
IAP_DATA	C2H	E2H	ISP/IAP Flash data register
IAP_ADDRH	C3H	E3G	ISP/IAP Flash HIGH address register
IAP_ADDRL	C4H	E4H	ISP/IAP Flash LOW address register
IAP_CMD	C5H	E5H	ISP/IAP Flash command register
IAP_TRIG	C6H	E6H	ISP/IAP command trigger register
IAP_CONTR	C7H	E7H	ISP/IAP control register

STC15 series write 5AH and A5H sequential to trigger EEPROM flash command, and STC89 series write 46H and B9H sequential to trigger EEPROM flash command.

STC15 series EEPROM start address all location at 0000H, but STC89 series is not.

STC MCU Limited.

Internal/external clock source

STC15 series MCU has a optional internal high reliable R/C oscilator, Generally, for 40/44 pin package MCU, set to use external crystal oscillator and for 20/18/16 pin package set to use internl RC oscillator in factory. When use ISP download program, user can arbitrarily choose internal RC oscilator or external crystal oscillator. STC89 series MCU can only choose external crystal oscillator.

Power consumption

Power consumption consists of two parts: crystal oscillator amplifier circuits and digital circuits. For crystal oscillator amplifier circuits, STC15 series is lower then STC89 series. For digital circuits, the higher clock frequency, the greater the power consumption. STC15 series MCU instruction execution speed is faster than theSTC89 series MCU 3~24 times in the same working environment, so if you need to achieve the same efficiency, STC15 series required frequency is lower than STC89 series MCU.

About reset circuit

For STC15 series MCU, if the system frequency is below 12MHz, the external reset circuit is not required. Reset pin can be connected to ground through the 1K resistor or can be connected directly to ground. The proposal to create PCB to retain RC reset circuit

About Clock oscillator

For STC15 series MCU, if you need to use internal RC oscillator, XTAL1 pin and XTAL2 pin must be floating. If you use a external active crystal oscillator, clock signal input from XTAL1 pin and XTAL2 pin floating.

About power

For STC15 series MCU, power at both ends need to add a 47uF electrolytic capacitor and a 0.1uF capacitor, to remove the coupling and filtering.

STC MCU Limited.

Appendix H: Instruction Speed Boost Summary

The STC MCU instructions are fully compatible with the traditional 8051's,which are divided among five functional groups:

- Arithmetic
- Logical
- Data transfer
- Boolean variable
- Program branching

Instruction execution speed boost summary :

There are 111 instructions in MCU. For new STC15 series MCU

24 times faster execution speed than the traditional 8051	2
12 times faster execution speed than the traditional 8051	28
8 times faster execution speed than the traditional 8051	19
6 times faster execution speed than the traditional 8051	40
4.8 times faster execution speed than the traditional 8051	8
4 times faster execution speed than the traditional 8051	14

Based on the analysis of frequency of use order statistics, STC15 series MCU instruction execution speed is faster than the traditional 8051 MCU 8 ~ 12 times in the same working environment.

Instruction execution clock count (for new STC15 series)

1 clock instruction	22
2 clock instruction	37
3 clock instruction	31
4 clock instruction	12
5 clock instruction	8
6 clock instruction	1

It needs 283 clocks to finish executing at one time all 111 instructionsfor STC15 series, whiel it needs 1944 clocks for the traditional 8051 MCU. Obviouly, the speed of executing instruction for STC15 series MCU has beeb greatly enhanced. The average speed of STC15 series is 8~12 times faster than traditional 8051 MCU

The following tables provides a quick reference chart showing all the 8051 and STC15 seires MCU instructions. Once you are familiar with the instruction set, this chart should prove a handy and quick source of reference.

STC MCU Limited.

STC15 series MCU with super high-speed CPU core of STC-Y5 works 20% faster than STC early 1T series (such as STC12/STC11/STC10 series) at same clock frequency.

ARITHMETIC OPERATIONS

Mnemonic		Description	Byte	Execution clocks of tradional 8051	Execution clocks of STC15 series (super high-speed 1T 8051 CPU core of STC-Y5)	Efficiency Improved
ADD	A，Rn	Add register to Accumulator	1	12	1	12x
ADD	A，direct	Add ditect byte to Accumulator	2	12	2	6x
ADD	A，@Ri	Add indirect RAM to Accumulator	1	12	2	6x
ADD	A，#data	Add immediate data to Accumulator	2	12	2	6x
ADDC	A，Rn	Add register to Accumulator with Carry	1	12	1	12x
ADDC	A，direct	Add direct byte to Accumulator with Carry	2	12	2	6x
ADDC	A，@Ri	Add indirect RAM to Accumulator with Carry	1	12	2	6x
ADDC	A，#data	Add immediate data to Acc with Carry	2	12	2	6x
SUBB	A，Rn	Subtract Register from Acc wih borrow	1	12	1	6x
SUBB	A，direct	Subtract direct byte from Acc with borrow	2	12	2	6x
SUBB	A，@Ri	Subtract indirect RAM from ACC with borrow	1	12	2	6x
SUBB	A，#data	Substract immediate data from ACC with borrow	2	12	2	6x
INC	A	Increment Accumulator	1	12	1	12x
INC	Rn	Increment register	1	12	2	6x
INC	direct	Increment direct byte	2	12	3	4x
INC	@Ri	Increment direct RAM	1	12	3	4x
DEC	A	Decrement Accumulator	1	12	1	12x
DEC	Rn	Decrement Register	1	12	2	6x
DEC	direct	Decrement direct byte	2	12	3	4x
DEC	@Ri	Decrement indirect RAM	1	12	3	4x
INC	DPTR	Increment Data Pointer	1	24	1	24x
MUL	AB	Multiply A & B	1	48	2	24x
DIV	AB	Divde A by B	1	48	6	8x
DA	A	Decimal Adjust Accumulator	1	12	3	4x

STC MCU Limited.

LOGICAL OPERATIONS

Mnemonic	Description	Byte	Execution clocks of tradional 8051	Execution clocks of STC15 series (super high-speed 1T 8051 CPU core of STC-Y5)	Efficiency Improved
ANL A，Rn	AND Register to Accumulator	1	12	1	12x
ANL A，direct	AND direct btye to Accumulator	2	12	2	6x
ANL A，@Ri	AND indirect RAM to Accumulator	1	12	2	6x
ANL A，#data	AND immediate data to Accumulator	2	12	2	6x
ANL direct，A	AND Accumulator to direct byte	2	12	3	4x
ANL direct，#data	AND immediate data to direct byte	3	24	3	8x
ORL A，Rn	OR register to Accumulator	1	12	1	12x
ORL A，direct	OR direct byte to Accumulator	2	12	2	6x
ORL A，@Ri	OR indirect RAM to Accumulator	1	12	2	6x
ORL A，# data	OR immediate data to Accumulator	2	12	2	6x
ORL direct，A	OR Accumulator to direct byte	2	12	3	4x
ORL direct，#data	OR immediate data to direct byte	3	24	3	8x
XRL A，Rn	Exclusive-OR register to Accumulator	1	12	1	12x
XRL A，direct	Exclusive-OR direct byte to Accumulator	2	12	2	6x
XRL A，@Ri	Exclusive-OR indirect RAM to Accumulator	1	12	2	6x
XRL A，# data	Exclusive-OR immediate data to Accumulator	2	12	2	6x
XRL direct，A	Exclusive-OR Accumulator to direct byte	2	12	3	4x
XRL direct，#data	Exclusive-OR immediate data to direct byte	3	24	3	8x
CLR A	Clear Accumulator	1	12	1	12x
CPL A	Complement Accumulator	1	12	1	12x
RL A	Rotate Accumulator Left	1	12	1	12x
RLC A	Rotate Accumulator Left through the Carry	1	12	1	12x
RR A	Rotate Accumulator Right	1	12	1	12x
RRC A	Rotate Accumulator Right through the Carry	1	12	1	12x
SWAP A	Swap nibbles within the Accumulator	1	12	1	12x

STC MCU Limited.

DATA TRANSFER

Mnemonic		Description	Byte	Execution clocks of tradional 8051	Execution clocks of STC15 series (super high-speed 1T 8051 CPU core of STC-Y5)	Efficiency Improved
MOV	A, Rn	Move register to Accumulator	1	12	1	12x
MOV	A, direct	Move direct byte to Accumulator	2	12	2	6x
MOV	A, @Ri	Move indirect RAM to Accumulator	1	12	2	6x
MOV	A, #data	Move immediate data to Accumulator	2	12	2	6x
MOV	Rn, A	Move Accumulator to register	1	12	1	12x
MOV	Rn, direct	Move direct byte to register	2	24	3	8x
MOV	Rn, #data	Move immediate data to register	2	12	2	6x
MOV	direct, A	Move Accumulator to direct byte	2	12	2	6x
MOV	direct, Rn	Move register to direct byte	2	24	2	12x
MOV	direct, direct	Move direct byte to direct	3	24	3	8x
MOV	direct, @Ri	Move indirect RAM to direct byte	2	24	3	8x
MOV	direct, #data	Move immediate data to direct byte	3	24	3	8x
MOV	@Ri, A	Move Accumulator to indirect RAM	1	12	2	6x
MOV	@Ri, direct	Move direct byte to indirect RAM	2	24	3	8x
MOV	@Ri, #data	Move immediate data to indirect RAM	2	12	2	6x
MOV	DPTR,#data16	Move immdiate data to indirect RAM	3	24	3	8x
MOVC	A, @A+DPTR	Move Code byte relative to DPTR to Acc	1	24	5	4.8x
MOVC	A, @A+PC	Move Code byte relative to PC to Acc	1	24	4	6x
MOVX	A, @Ri	Move on-chip expanded RAM(8-bit addr) to Acc. Read operation	1	24	3	8x
MOVX	@Ri, A	Move Acc to on-chip expanded RAM(8-bit addr).Write operation.	1	24	4	8x
MOVX	A, @DPTR	Move on-chip expanded RAM(16-bit addr) to Acc.Read operation.	1	24	2	12x
MOVX	@DPTR, A	Move Acc to on-chip expanded RAM (16-bit addr). Write operation.	1	24	3	8x
MOVX	A, @Ri	Move Acc to External RAM(8-bit addr). Read operation.	1	24	5xN+2 see the following illustration about the value of N	*Note1
MOVX	@Ri, A	Move Acc to External RAM(8-bit addr). Write operation.	1	24	5×N+3	*Note1
MOVX	A, @DPTR	Move External RAM(16-bit addr) to Acc. Read operation.	1	24	5×N+1	*Note1
MOVX	@DPTR, A	Move Acc to External RAM (16-bit addr). Write operation.	1	24	5×N+2	*Note1
PUSH	direct	Push direct byte onto stack	2	24	3	8x
POP	direct	POP direct byte from stack	2	24	2	12x
XCH	A, Rn	Exchange register with Accumulator	1	12	2	6x
XCH	A,direct	Exchange direct byte with Accumulator	2	12	3	4x
XCH	A, @Ri	Exchange indirect RAM with Accumulator	1	12	3	4x
XCHD	A, @Ri	Exchange low-order Digit indirect RAM with Acc	1	12	3	4x

When EXRTS[1:0] = [0,0], N=1 in above formula;
When EXRTS[1:0] = [0,1], N=2 in above formula;
When EXRTS[1:0] = [1,0], N=4 in above formula;
When EXRTS[1:0] = [1,1], N=8 in above formula;

EXRTS[1：0] are the bit of B0 and B1 BUS_SPEED

STC MCU Limited.

BOOLEAN VARIABLE MANIPULATION

Mnemonic		Description	Byte	Execution clocks of tradional 8051	Execution clocks of STC15 series (super high-speed 1T 8051 CPU core of STC-Y5)	Efficiency Improved
CLR	C	Clear Carry	1	12	1	12x
CLR	bit	Clear direct bit	2	12	3	4x
SETB	C	Set Carry	1	12	1	12x
SETB	bit	Set direct bit	2	12	3	4x
CPL	C	Complement Carry	1	12	1	12x
CPL	bit	Complement direct bit	2	12	3	4x
ANL	C, bit	AND direct bit to Carry	2	24	2	12x
ANL	C, /bit	AND complement of direct bit to Carry	2	24	2	12x
ORL	C, bit	OR direct bit to Carry	2	24	2	12x
ORL	C, /bit	OR complement of direct bit to Carry	2	24	2	12x
MOV	C, bit	Move direct bit to Carry	2	12	2	12x
MOV	bit, C	Move Carry to direct bit	2	24	3	8x
JC	rel	Jump if Carry is set	2	24	3	8x
JNC	rel	Jump if Carry not set	2	24	3	8x
JB	bit, rel	Jump if direct bit is set	3	24	5	4.8x
JNB	bit, rel	Jump if direct bit is not set	3	24	5	4.8x
JBC	bit, rel	Jump if direct bit is set & clear bit	3	24	5	4.8x

STC MCU Limited.

PROGRAM BRANCHING

Mnemonic		Description	Byte	Execution clocks of tradional 8051	Execution clocks of STC15 series (super high-speed 1T 8051 CPU core of STC-Y5)	Efficiency Improved
ACALL	addr11	Absolute Subroutine Call	2	24	4	6x
LCALL	addr16	Long Subroutine Call	3	24	4	6x
RET		Return from Subroutine	1	24	4	6x
RETI		Return from interrupt	1	24	4	6x
AJMP	addr11	Absolute Jump	2	24	3	8x
LJMP	addr16	Long Jump	3	24	4	6x
SJMP	re1	Short Jump (relative addr)	2	24	3	8x
JMP	@A+DPTR	Jump indirect relative to the DPTR	1	24	5	4.8x
JZ	re1	Jump if Accumulator is Zero	2	24	4	6x
JNZ	re1	Jump if Accumulator is not Zero	2	24	4	6x
CJNE	A，direct，re1	Compare direct byte to Acc and jump if not equal	3	24	5	4.8x
CJNE	A，#data，re1	Compare immediate data to Acc and Jump if not equal	3	24	4	6x
CJNE	Rn，#data，re1	Compare immediate data to register and Jump if not equal	3	24	4	6x
CJNE	@Ri，#data，re1	Compare immediate data to indirect and jump if not equal	3	24	5	4.8x
DJNZ	Rn，re1	Decrement register and jump if not Zero	2	24	4	6x
DJNZ	direct，re1	Decrement direct byte and Jump if not Zero	3	24	5	4.8x
NOP		No Operation	1	12	1	12x

Update Date 2011-10-17

STC MCU Limited.

Appendix I: How to reduce the Code Length by Keil C

Setting as shown below in Keil C can maximum reduce about 10K to the length of original code

1. Choose the "Options for Target" in "Project" menu
2. Choose the option "C51" in "Options for Target"

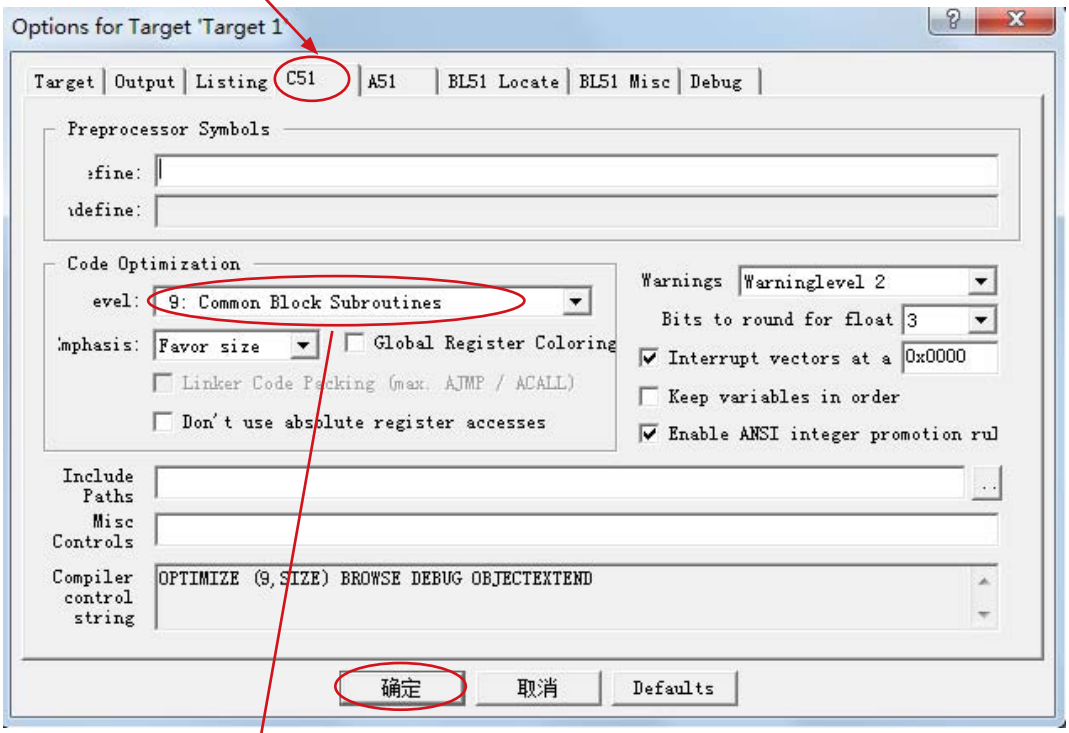

3. Code Optimization, 9 common block subroutines
4. Click "OK", compile the program once again.

Appendix J: Circuit Diagram of STC15 Demo Board

Illustration

IAP15F/15L2K61S2、STC15F/15L2K08S2 all could be used to simulate, but STC15F/15L2K08S2 are cheaper.

SW23 is cold boot switch when downloading

power supply：Get 5V power from USB interface or 8~12V power from external.

P5.5/CAP, which need to connect an 4.7uF to ground, is an internal decoupling pin.

Six key, which can wake up MCU from stop/power-down mode , may be as infrared transmitting and receiving, or other function.

Before MCU go into stop/power-down mode, P3.4_KEY / P1.7_KEY should output low, and P3.2_INT0 / P3.3_INT1 output high. If MCU went into stop/power-down mode during that P3.2_INT0 and P3.3_INT1 were high level, any key would be able to wake up MCU.

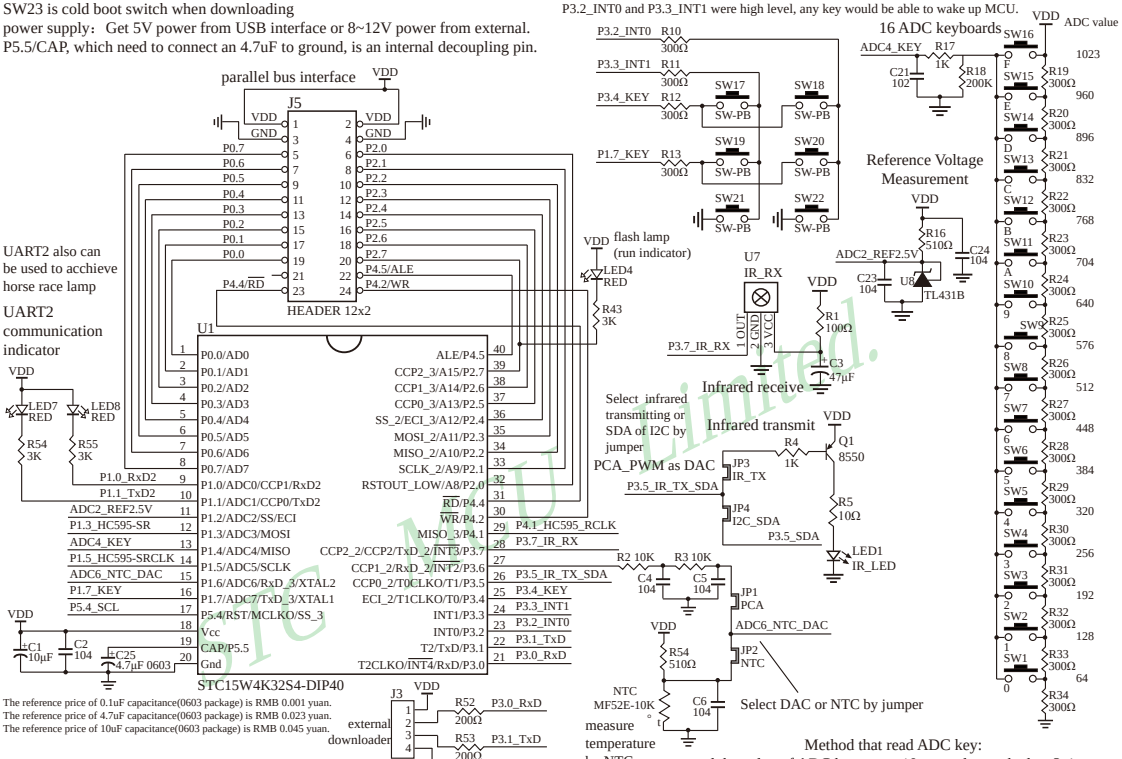

Method that read ADC key:

read the value of ADC key every 10ms, and save the last 3 times values. determine the key again if the variation is small. Allow some error when determining key, such as ±16 words error

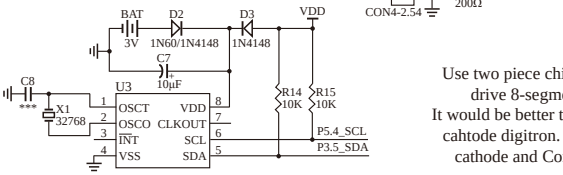

Use two piece chips 74HC595 to drive 8-segment digitron

It would be better to select common cahtode digitron. (both Common cathode and Common anode)

The reference price of 74HC595(SOP-16) is RMB 0.2 yuan.

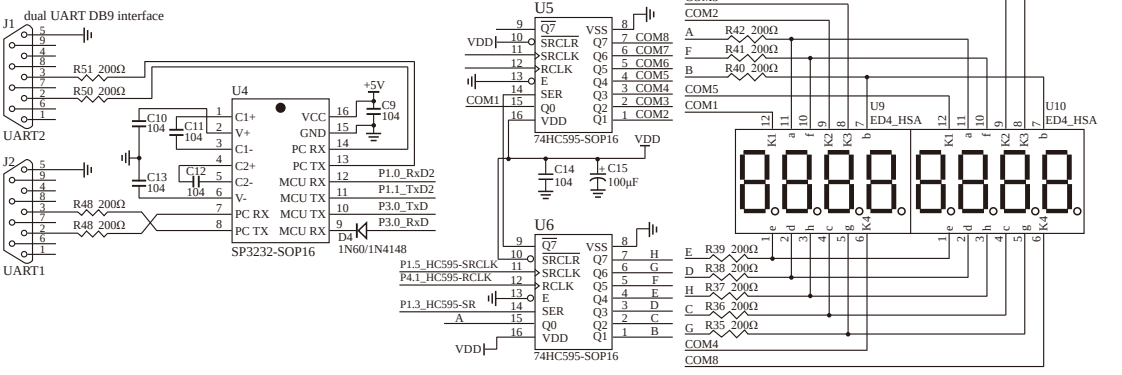

STC MCU Limited.

Circuit diagram of STC15W4K32S4 series MCU demo board

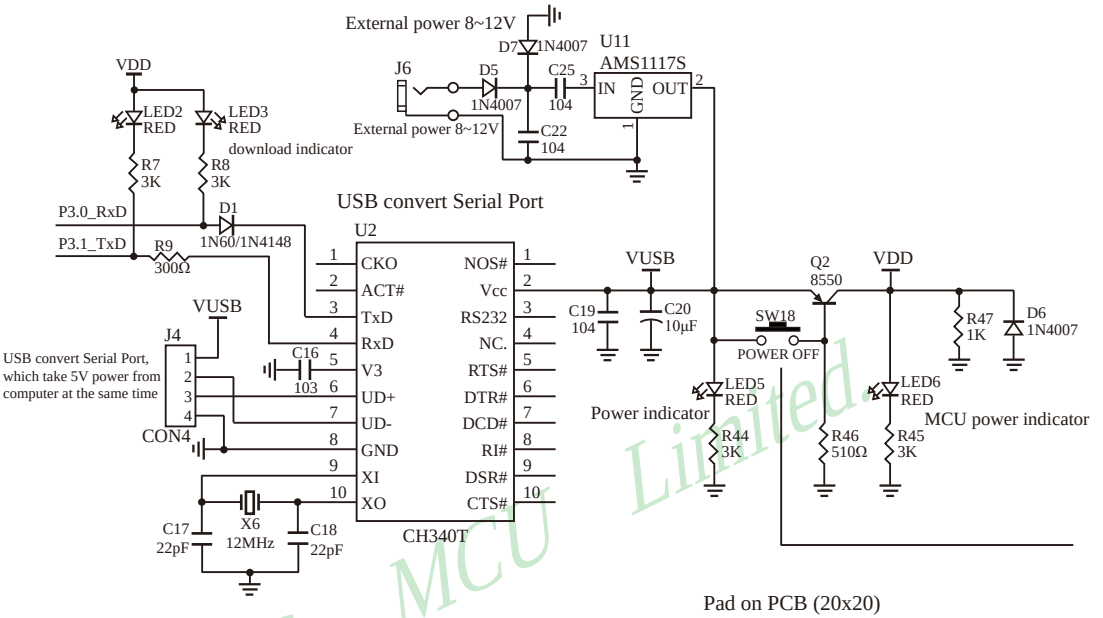

Pad on PCB (20x20)

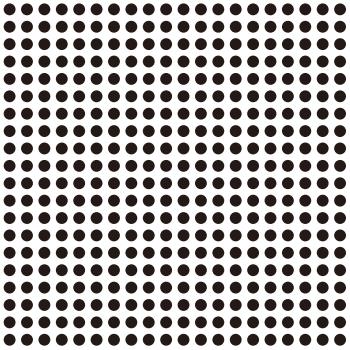

STC MCU Limited

Physical Map of STC15 series Demo Board

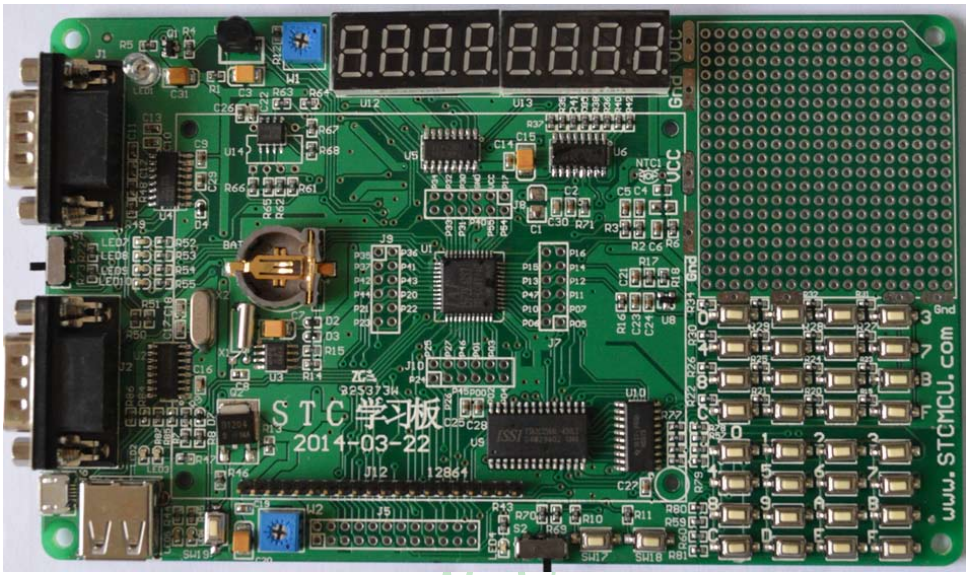

Front View

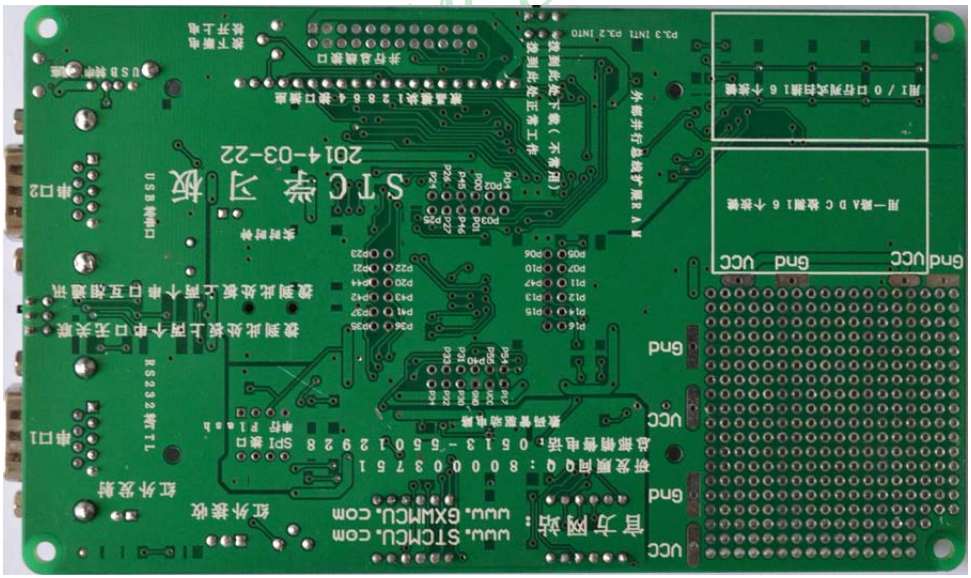

Back Show

Please log in website as below to download the test program of STC15 series Demo Board :

http://www.stcmcu.com/STC-Study/STC-%E5%BC%80%E5%8F%91%E6%9D%BF4-%E7%A8%8B%E5%BA%8F-C%E8%AF%AD%E8%A8%80-V1.RAR

The Demo Board in a box