NASA TECHNICAL MEMORANDUM

NASA TM X-71981

NASA TM X-79181

THE PROMISE OF AIR CARGO - SYSTEM ASPECTS AND VEHICLE DESIGN

by Allen H. Whitehead, Jr.

July 19, 1976

NATIONAL AERONAUTICS AND SPACE ADMINISTRATION
LANGLEY RESEARCH CENTER, HAMPTON, VIRGINIA 23665

1. Report No. TM X-71981	2. Government Accession No.	3. Recipient's Catalog No.

4. Title and Subtitle

THE PROMISE OF AIR CARGO - SYSTEM ASPECTS AND VEHICLE DESIGN

5. Report Date

July 19, 1976

6. Performing Organization Code

7. Author(s)

Allen H. Whitehead, Jr.

8. Performing Organization Report No.

31.400

9. Performing Organization Name and Address

Langley Research Center
Hampton, Virginia 23665

10. Work Unit No.

11. Contract or Grant No.

12. Sponsoring Agency Name and Address

National Aeronautics and Space Administration
Washington, DC 20546

13. Type of Report and Period Covered

Technical Memorandum

14. Sponsoring Agency Code

15. Supplementary Notes

16. Abstract

A review of the current operation of the air cargo system and a discussion of the prospects for the future indicate that if technological innovations can be brought to maturity and implemented, and if the efficiency of the interface with the surface mode can be improved, the air mode could show an unprecedented growth.

This paper provides an assessment of the future of air cargo by analyzing air cargo statistics and trends, by noting air cargo system problems and inefficiencies, by analyzing characteristics of "air-eligible" commodities, and by showing the promise of new technology for future cargo aircraft with significant improvements in costs and efficiency.

The paper addresses the following topics: Air Cargo Demand Forecasts, Economics of Air Cargo Transport, The Integrated Air Cargo System, Evolution of Airfreighter Design, and The Span-Distributed Load Concept.

17. Key Words (Suggested by Author(s)) Air Cargo Systems Market Analysis Freighter Aircraft Design	18. Distribution Statement UNCLASSIFIED - UNLIMITED

19. Security Classif. (of this report) Unclassified	20. Security Classif. (of this page) Unclassified	21. No. of Pages 38	22. Price* $3.75

* For sale by the National Technical Information Service, Springfield, Virginia 22161

ABSTRACT

The Promise of Air Cargo - System Aspects and Vehicle Design

by Allen H. Whitehead, Jr.

A review of the current operation of the air cargo system and a discussion of the prospects for the future indicate that if technological innovations can be brought to maturity and implemented, and if the efficiency of the interface with the surface mode can be improved, the air mode could show an unprecedented growth.

This paper provides an assessment of the future of air cargo by analyzing air cargo statistics and trends, by noting air cargo system problems and inefficiencies, by analyzing characteristics of "air-eligible" commodities, and by showing the promise of new technology for future cargo aircraft with significant improvements in costs and efficiency.

The paper addresses the following topics:

- Air Cargo Demand Forecasts
- Economics of Air Cargo Transport
- The Integrated Air Cargo System
- Evolution of Airfreighter Design
- The Span-Distributed Load Concept

THE PROMISE OF AIR CARGO - SYSTEM ASPECTS AND VEHICLE DESIGN

by Allen H. Whitehead, Jr.
NASA Langley Research Center

SUMMARY

A review of the current operation of the air cargo system and a discussion of the prospects for the future indicate that if technological innovations can be brought to maturity and implemented, and if the efficiency of the interface with the surface mode can be improved, the air mode could show an unprecedented growth. Air cargo demand is forecasted to increase in a dynamic manner. Estimates vary between 11 to 16 percent per year between now and the 1990's. These forecasts conservatively indicate a fourfold increase in air cargo traffic between 1975 and 1985.

Dedicated, advanced terminals will be required to support the air cargo system of the future. A synergetic approach is imperative. Intermodal containers, automated handling systems, and computerized control and billing may be key ingredients. Farsighted planning for tomorrow's air freight center is in evidence; the town of Coalinga, California is studying the system requirements and the potential benefit of serving as a worldwide aerial trade center. Other nations, particularly in Europe, are seriously considering a freight distribution network using advanced freighter aircraft.

NASA and industry studies indicate that large gains in aircraft payload and fuel efficiency are possible from the application of advanced technologies and configuration concepts. Recent results have indicated that for containerized payloads exceeding 600,000 pounds, the span-distributed load concept provides savings in operating costs over advanced fuselage-loaded designs. The distributed-load concept benefits from reduced bending material and from commonality.

INTRODUCTION

Compared to the cargo volume transported by the surface modes, air cargo is still in its infancy. Air cargo service was initiated in the United States in the late 1920's with the airmail service, and experienced significant growth during World War II with the transport of critical military supplies. Military airlift accomplished a truly heroic task in the Berlin airlift in 1949. With the advent of efficient high-speed turbine powered aircraft in the late 1950's, the future of air cargo appeared bright.

Indeed, airfreight volume generated by United States carriers increased from around 0.3 billion ton-miles in 1950 to 6.0 billion ton-miles in 1974 (refs. 1 and 2). Even with this growth, however, the volume of goods transported by air between the U.S. and Europe in 1973 represented less than 0.5 percent of the total carriage (ref. 3). Some aspects of the current environment are illustrated in figure 1. A significant feature of this transatlantic trade is that of the total $9 billion value of the cargo transported by all modes, the air share is around 25 percent by value. Air carriage is thus already an important factor in the balance of trade. As the photograph suggests in figure 1, considerable improvement can be realized by improved handling techniques.

The purpose of this paper is to provide an assessment of the future of air cargo by analyzing air cargo statistics and trends, by noting air cargo system problems and inefficiencies, by analyzing characteristics of "air-eligible" commodities, and by showing the promise of new technology for future cargo aircraft with significant improvements in costs and efficiency.

The paper will address the following topics:

- Air Cargo Demand Forecasts
- Economics of Air Cargo Transport
- The Integrated Air Cargo System
- Evolution of Airfreighter Design
- The Span-Distributed Load Concept

Air Cargo Demand Forecasts

The growth of the air cargo market is dependent on a host of factors which can be broadly classified into two categories. One is, of course, the level of the shipper demand for air cargo distribution, and the second is the system impediments and problems which currently plague the air cargo operation. Generally, the freight rate for air transportation is considerably higher than for the surface modes; this being the case, cost evaluation of alternate modes must consider all of the distribution costs door-to-door, to accurately reflect the total cost of distribution. American industry's traditional dependence on surface distribution represents a considerable inertia to be overcome by virtue of the capital investment in transportation equipment and warehousing facilities.

A second problem relates to the regulatory morass that confuses the shippers and can hinder the aggressive freight carrier from capitalizing on attractive opportunities for expansion. The problems associated with the international rate structure are compounded by the requirement of the International Air Transport Association for a unanimous agreement from its carrier members for a commodity rate decision. On the North Atlantic zone, there are 185 commodity groupings and 19,000 separate rates (ref. 3). There are different rates for shoes and footware, cloth and textiles, and motorcycle parts and disassembled motorcycles.

In today's air cargo network, a significant fraction of the system costs are attributed to ground operations. The interface with the appropriate ground mode vehicle required to complete the delivery is inefficient and can represent delays that all but eliminates the speed advantage offered by the air mode. Security of the cargo also is a high ground operation cost. At many of the airports, the freighter operation must contend with a second-class status because of the focus on the passenger operation.

To maximize the future growth of air cargo, most of these problems must be resolved. Even in today's environment, industry sources indicate that the demand for commercial air cargo is increasing as illustrated in figure 2 (ref. 4). The history and forecasts of demand in terms of revenue ton-miles indicates that the current market demand was preceded by an annual growth rate of approximately 13-1/2 percent since 1960. This market is characterized by high value, unplanned, and perishable goods which currently represents an 11-percent annual growth rate constituting 0.2 percent of the total world trade. As indicated, about half of this volume would continue to be carried as belly cargo on passenger aircraft and half in dedicated freighters.

Attractive new market opportunities exist for expansion into a much broader spectrum of commodities. A significant increase in scheduled airfreight traffic is forecasted to supplement unplanned shipments. Moderate cost improvements may produce a breakthrough for air cargo operations. These cost reductions can be achieved by improvements in ground operations or by more efficient aircraft designs, or both. In 1970, it was shown from available data that a product value of around $1.00 per pound defined a "threshold" for delineating air-eligible commodities (ref. 5). More recent studies have shown the importance of additional factors in defining air eligibility such as payload density, fragility, market time sensitivity, and market growth characteristics (ref. 6). The new market objective shown in figure 2 represents a 16-percent growth rate beyond 1975 and would result in an additional 0.1 percent of the forecasted world trade. This modest stimulation of the market will require a substantial number of new cargo aircraft to meet the projected traffic. For example, the requirement in 1985 equates to about 240 747-F aircraft, or a fewer number of very large aircraft.

Economics of Air Cargo Transport

An increase in the airfreight share of the market is predicated on an increase in carriage of traditional "air-eligible" commodities as well as some penetration into commodities currently transported solely by surface modes. For this reason, shippers, airlines, and aircraft manufacturers need a clear understanding of the economics of cargo transportation as dictated by the marketplace.

A comparison of 1973 transportation operating costs and marketing characteristics associated with surface and air modes is presented in figure 3 (ref. 7).

The long-haul, low value goods are carried primarily by ships and railroads with costs of 0.8 and 1.8 cents-per-ton-mile, respectively. The short-haul low and medium value goods are carried primarily by trucks at about 4.9 cents-per-ton-mile. For the air mode, the goods are characteristically those of the long-haul, high value category. The early airfreighters had relatively high costs but large improvements have been accomplished by more recent aircraft, such as the Boeing 747 which had a 1973 direct operating cost of approximately 5.4 cents-per-ton-mile. As will be shown subsequently, it appears that advanced concepts can further reduce the costs, possibly to values below 4 cents-per-ton-mile.

If aircraft direct operating costs (DOC) can undercut the DOC of trucks, it would appear from this comparison that the air mode would capture a large share of the freight moved by truck. The direct costs are only part of the total operating cost, however. For the air mode, the pie chart on the right of figure 3 shows that indirect operating costs can be a significant contribution to total operating costs. The indirect costs for the ground modes are quite low in comparison. Trucks, for example, offer door-to-door delivery, thereby eliminating much of the cargo handling required in the air mode operation.

Even though air transportation rates are generally higher than surface rates, other economic factors must be considered before a manufacturer selects the transportation mode for his product. The concept of "Total Distribution Cost" is introduced in figure 4 and is useful in determining the economic value of time saved by air. For a case typical of the appliance industry, the operating expense dollar is divided into manufacturing, marketing, and distribution (ref. 8). The distribution costs for surface and air modes are shown and include transportation, inventory and warehousing costs. Because of the speed advantage of the air mode, warehousing and inventory costs are minimized (refs. 9 and 10). While air transportation costs are 20 percent higher, the total distribution costs are reduced, producing a net cost savings of 4 cents. For a company whose distribution system is built around surface transportation, the change to the air mode can be complex. To derive optimum benefit from air carriage, changes may be necessary in warehousing, production, accounting systems, and even changes in organization. The conversion to air distribution may well be an evolutionary process.

In addition to high-value products, two other product characteristics that lead to "air-eligibility" are fragility and perishability. Television sets are a commodity which are both high-value and fragile. The analysis shown in figure 5 taken from Lockheed-Georgia (ref. 11) illustrates the potential savings in transportation costs for sets manufactured in Japan for distribution through Atlanta, Georgia. The surface mode is characterized by slow-moving conveyances, numerous steps involving considerable handling of the cargo, and highly circuitous routing. Delivery time is three to four months at a per cost of $52. Because the air mode reduces this delivery time to four to five days, unit cost drops to $36. This 30 percent savings by air transport is determined by consideration of the capital loss associated with the large inventory tied up in the ground mode "pipeline." Additional savings could also be realized in reduced warehousing costs.

The transport from California to the East Coast of a typical time-sensitive product such as lettuce is illustrated in figure 6 (ref. 12). Presented at the top of the figure is the lettuce freshness condition as a function of transport time, from harvest to delivery, for two values of constant temperature and a temperature variation typical of surface modes. Note that after about ten days, the quality of the lettuce transported by the surface mode has degraded to a fair condition. The air mode can provide origin to destination delivery in about three days. Shown at the bottom of the figure are the total distribution costs of both surface and air modes. Although the air fare is about 40 percent higher, the spoilage is reduced from about 25 percent to 1 percent with a resultant net savings of approximately 30 percent. Not considered in this saving is the additional shelf life of the product and improved product quality made possible by the rapid delivery with the air mode.

Integrated Air Cargo System

From the type of analysis just considered, it may appear advantageous to ship a certain product by air when the "total cost of distribution" is considered; however, if an efficient ground-support system is lacking, the potential benefits can evaporate. The current problem of excessive cost of ground operations has already been cited. A synergetic approach may be needed to reduce these costs which consider the entire transportation system, surface, and air. What may be required is an intermodal network dedicated to increasing the total transportation efficiency and capability of the nation, both for military and commercial sectors.

The Paris Airport Authority has actively promoted airfreight by establishing an environment for ground operations that can greatly reduce the indirect operating costs (ref. 13). At two of the major French airports, Orly and Roissy-Charles de Gaulle, the Paris Airport Authority pursued several steps in the design of the terminal areas to optimize the air cargo operation. The freight terminal was separated from the passenger operations, and large, automated warehousing facilities are provided for international industrial and commercial firms. The airfreight forwarding agents have pooled their facilities to insure that all freight processing operations, the loading and unloading of containers and the transit and delivery of freight to consignees are carried out quickly and efficiently. A special set of regulations and a sophisticated data processing system will ease the delays inherent in the customs procedures. Special tariffs have been introduced to encourage potential users to think in terms of overall distribution costs. Specialized firms are available to service the cargo aircraft. These developments require cooperation of numerous elements within the airfreight system, all dedicated toward insuring that the time saved in flight is not lost on the ground.

A terminal area concept for the future must be designed to facilitate cargo disposition at minimum overall cost. A dedicated cargo terminal concept which could meet this objective is depicted in figure 7 (ref. 14). Such a system would be fully mechanized and computer controlled, with emphasis on high-volume, high-speed processing, and minimum manpower. Cargo is delivered by truck, sorted and unitized for efficient air shipment, then the palletized or containerized units are sequenced for optimum loading onto the proper aircraft. These operations would all be computer controlled, including the mechanical operations. The computer system would automatically weigh and price each item, provide the proper sequencing, and bill the customer. The computer could be queried for determining the status of any item in the system and to provide data and data analysis for management. The reduced operating costs and efficiencies attributed to higher level of mechanization must be traded off against the increased investment cost of such a system.

The air cargo community is enthusiastic over recent developments and planning for a dedicated aerial trade center in the town of Coalinga, California (fig. 8). This town is located inland between San Francisco and Los Angeles adjacent to the fertile San Joaquin Valley where a large percentage of the fresh produce consumed in this country is grown. With ready access to railroad and interstate highways to facilitate delivery of agricultural goods grown in the valley, the products would be flown to markets all over the world. In this case, there is not likely to be a "back-haul" problem since California is a heavy importer of industrial and machine products. Studies have indicated that vast overseas markets exist for California's fruits and vegetables, markets that can only be supplied by the premium service offered by the air mode. Further, analyses have shown that California must enlarge the export of this produce or face problems of overproduction.

The planning and development represented by Coalinga's approach emphasizes the systems analysis methodology in which all elements of the system are considered and optimally integrated before committing major resources. The entire distribution system from the harvesting of the crop to the purchase by the housewife has been considered. The Coalinga development could serve as the progenitor of tomorrow's aerial trade center. Several references from the transport industry can be cited which allude to the future need for such centers, often referred to as "gateway" centers (ref. 15, for example).

A privately funded joint venture dedicated to defining the most efficient and cost-effective transfer of cargo between modes has been completed (ref. 16). The Intermodal Air Cargo Test (INTACT) Project had over 40 participants including aircraft manufacturers, airline shippers, air forwarders, airports, the Department of Transportation, and the U.S. Air Force. The purpose of this project was to prototype test and demonstrate a multimodal systems concept employing the U.S. Air Force Lockheed C-5A "Galaxy" aircraft, various land and sea containers, and unique automated handling and loading concepts. Specific objectives were to: (1) establish a basis for determining specifications for cargo-handling equipment, (2) define operational interfaces with surface transportation, and (3) develop an operational data base for projection of systems economics and analyses of total cost distribution.

Transcontinental flights and unloading demonstrations have recently been completed between Oakland, California, and Nashville, Tennessee (October 1975). An efficient intermodal air segment linked directly to surface transportation modes is seen as one of the keys to large-volume air cargo operations, so it is critical that this approach be thoroughly evaluated. Only one round trip flight was accomplished in the INTACT program; this premature termination left several objectives uncompleted (ref. 17).

Evolution of Airfreighter Design

A brief evolutionary synopsis of airfreighter designs and potential future concepts is presented in figure 9 (sketches are to the same scale), for both civil and military applications. Although there were earlier aircraft, the real genesis is generally accepted as the Douglas C-47 Skytrain, which had its first flight in 1935. The Douglas C-54 Skymaster, which served both civil and military roles, had its first flight in 1942. The Lockheed C-130 Hercules, a current military workhorse, initiated service in 1954 and the Douglas DC-8 (series 10), in 1958. The Lockheed C-141 first flew in 1963 and the C-5, in 1963. The Lockheed C-141 first flew in 1963 and the C-5, in 1968. The Boeing 747 was introduced in 1969. In this 34-year period, the gross weights have increased from 26,000 pounds for the C-47 to nearly 800,000 pounds for the 747 and C-5 aircraft. During this evolution, the direct operating costs have been reduced from approximately 20 cents-per-ton-mile for the C-54 to about 5.4 cents-per-ton-mile for the B-747 (based on 1973 costs). NASA and several aircraft manufacturers are investigating the distributed-load concept in which payload and fuel are placed within the wing to partially offset the aerodynamic load. The results of these studies will be discussed in a future section. The laminar flow concept depicted in figure 9 is being studied in-house at NASA - Langley Research Center and under an Air Force contract (ref. 18). This design has a lift-to-drag ratio around 50 and has a range of 15,000 nautical miles.

Foreign competition in advanced cargo aircraft design could present a challenge to U.S. industry. Dornier of Germany has proposed the development of the huge flying ship shown in figure 10 (ref. 19). A consortium of several countries would share the development costs of this airplane which would primarily serve the numerous European ports located near major waterways. Russia has developed several prototypes of the Ekranoplan shown in figure 10 (ref. 20). This low aspect-ratio design operates in ground effect and takes off or lands on water by vectoring the thrust from the forward mounted engines below the wing. Whereas the aerodynamic efficiency of the design is limited, the vehicle promises an exceptionally low structural weight fraction. A NASA wind-tunnel model based on this design concept is shown in figure 11. The NASA version could be a spanloader, with payload placed within the wing.

Other aircraft concepts under study by NASA includes wingtip coupled or towed aircraft systems (fig. 12), alternate-fuel designs (hydrogen and methane), tandem wing, and multiple-fuselage configurations. The Boeing Company has conceived a double-lobe fuselage design (fig. 13, ref. 21) which offers operational and performance advantages and can be pressurized with minimum performance and economic penalty.

The Span-Distributed Load Concept

The concept of distributing the payload in the wing structure is a promising design approach applicable to the next generation of large cargo aircraft. Most of the payload and fuel would be carried in the wing to achieve a more uniform distribution of weight to balance aerodynamic loading. The resulting reduced structural weight allows a higher payload fraction and/or range if the aerodynamic efficiency can be made comparable or better than fuselage-loaded designs. Furthermore, the spanload concept lends itself to a modular structure and simplified design procedures which could reduce the design, engineering, and manufacturing costs. A preliminary NASA analysis (ref. 22) shows the potential benefits and the influence of critical design variables. The application of this concept to the 1990 market is analyzed in reference 23. Critical research and technology is defined that would be required for development of these airplanes in that time period.

Studies have recently been completed by three airframe manufacturers on the application of the distributed-load concept to advanced-technology cargo aircraft design. Two contractual studies will soon be completed by the Boeing Commercial Airplane Company (ref. 21) and the Douglas Aircraft Company (ref. 24). The Lockheed-Georgia Company conducted a study with the same guidelines on company funds, and that study will also be published as a NASA contractor report. An essential feature of these studies was to compare the spanload designs with a reference, fuselage-loaded aircraft with the same degree of advanced technology. A short summary of the three study results is provided along with comparison of the results.

Boeing Spanloader. - The Boeing study airplane is shown in figure 14. This design concept is an unswept, unpressurized distributed-load concept. A supercritical wing contour is used because of its excellent volumetric efficiency for housing the cargo and for its high drag-rise Mach number. The airfoil contour is identical at any spanwise section which promotes commonality of parts and, hence, reduced engineering and tooling costs. The use of endplates and wingtip fins (i.e., winglets) greatly enhances the aerodynamic efficiency of this low aspect ratio, untapered configuration; induced drag is reduced by 35-40 percent. The design is longitudinally unstable, requiring a hard stability augmentation system. The control surfaces along the trailing edge are part of a digital, fly-by-wire, active control system. A full-time load alleviation system is employed to further reduce the bending moments and the structural weight. The large vertical endplates are all-moving surfaces sized by lateral maneuverability requirements on approach. These surfaces act as side force generators to provide the required lateral flight path control. These control surfaces also provide directional control and lateral/directional stability augmentation. Engine-out directional trim is achieved by activating split trailing-edge drag devices on the vertical fins.

The wing loading of the Boeing design is low (82 lbs/ft^2) which is characteristic of the distributed-load concept. As a result, the field length required for takeoff or landing was well under the value specified in the contract guidelines. The engine characteristics were determined by the cruise condition. The airplane does not rotate during takeoff, maintaining taxi attitude until clear of the landing space. Some of the wheels will be powered and can rotate 90 degrees to permit movement along airport taxiways with the span of the aircraft aligned with the centerline of the taxi strip.

A parametric study of a range of distributed load configurations of this generic class was made to determine the best selection of size and geometry for optimum performance economics. The geometric selection criteria is based on an analysis portrayed in figure 15. A thickness-to-chord ratio is selected at each integral number of wide container bays to efficiency use the wing internal volume. The maximum thickness for all designs was set by Boeing's requirement for maintaining at least one bay height at 10.7 feet to carry the military oversize cargo. Thus, the thickness to chord ratio is decreased by increasing wing chord. Each of the four cross-sections (3, 4, 5, and 7 bays) was combined with three different wing spans to furnish a matrix of parametric study configurations. Since the selection of thickness ratio determined the number of cargo bays and wing chord, there exists an implicit relationship between payload weight and volume and airplane geometry. These effects are shown in figure 15 for the design payload density of 10 pounds/feet^3. Three parametric design points are illustrated to show the configuration geometry. In contrast to conventional airplane design procedures, aspect ratio is not an input variable but is predetermined by more fundamental geometric or mission inputs. For example, at a payload value of 600,000 pounds, the 24-percent thick, 3-bay configuration has an aspect ratio of 6.2, while the 14-percent thick, 7-bay design has an aspect ratio of only 1.5. Only at very large payloads do the thinner airfoils have reasonable aspect ratios. The filled symbol on figure 15 denotes the choice for the study configuration, a 4-bay design with a span of 275 feet. The gross weight of the Boeing study airplane is 1,670,000 pounds, or over twice the weight of the 747-F.

Some of the results of the Boeing study are shown in the next three figures (16, 17, and 18). One of the contractor tasks was to compare the distributed-load design with a contractor-conceived, fuselage-loaded configuration. While the payload of the study design was fixed at 600,000 pounds, the payload of the reference configuration (see fig. 13) was chosen by the contractor. Both vehicles were required to meet a traffic requirement of 67 billion ton-miles per year. By not choosing equal payloads, the distributed load design could be designed to a payload suited more to its favor, and the square-cube law (ref. 25) would not severely degrade the structural efficiency of the reference airplane.

The comparison of the study and reference airplanes from the Boeing analysis is shown in Figure 16. Also shown for comparison are data for the 747-F. This reference airplane design has been studied in depth by The Boeing Company and has benefited from analytical and wind-tunnel optimization. The speed and lift-to-drag ratio (L/D) for the reference design are higher than the study airplane, a result that is attributed to the high thickness ratio and low aspect ratio of the distributed-load design. The load-carrying structural elements within the wing (ribs and shear and bending material) represent only 26 percent of the total wing weight of the distributed load airplane. The load-carrying structure of the reference airplane is over 50 percent of wing weight. As a result, the comparison of payload to operating empty weight in Figure 16 reflects the high structural efficiency of the study design.

The fuselage-load configuration has an advantage in aerodynamic efficiency, so the payload-to-block-fuel ratio shows an advantage to the fuselage-loaded configuration. The structural and aerodynamic efficiencies for the two advanced designs were found to offset each other in a comparison, resulting in the same payload fraction for both designs. Note that either advanced configuration shows substantial gains for both parameters over the current large freighter, the 747-F. This result indicates the potential benefits that are available to the air cargo industry by the design of an advanced, dedicated air freighter.

The economic comparison considers the direct operating costs plus a factor to more correctly account for the operator's investment in the airplane. The study airplane is found to show a marginal advantage in this economic evaluation. This result is not immediately apparent and is further amplified in Figure 17. On the left side of this Figure, the part-card count is plotted against structural weight. A part card is required in the design and construction of an airplane to identify each unique structural element in the configuration. A part-card count of unity is assigned to the distributed load aircraft; the rapid increase in part-card count with weight is indicative of the growth in complexity of conventional airplane design as the size increases. The structural weight of the reference configuration is indicated on the figure and suggests that the design will have about five times the number of unique parts as the study configuration.

The bar graph on the right gives the detail of the cost comparison. As expected, the fuel costs are higher for the study airplane. The top three cost elements (insurance, depreciation, and aircraft investment cost) are all related to aircraft price. Because of the commonality of parts and general simplicity of design, the distributed-load freighter is considerably cheaper per unit of empty weight ($138 per lb. compared to $161 per lb.). Thus, the addition of aircraft-price related items to the cost items provides an overall advantage in this study to the distributed-load design. The choice of configuration for a given set of design conditions could thus partly depend on the relative importance of fuel costs versus airplane acquisition costs.

The parametric study performed by Boeing revealed that the payload specified for the distributed-load configuration was too low to fully exploit the advantages of this concept. Figure 18 indicates that the costs of the reference configuration have been optimized at the design gross payload of 43,000 lbs., whereas payloads beyond that for the distributed-load study configuration would greatly enhance its economic advantage. As size increases, the thickness ratio and fuel consumption decreases for the distributed-load airplane. The study results show that the optimum way to expand the aircraft weight from an economic consideration is to maintain the aspect ratio and enlarge the span and chord proportionately. Had a common design payload been selected of 600,000 lbs. net payload (698,000 lbs. gross payload) for both reference and study airplanes, the cost comparison would have reflected a greater benefit to the study airplane. These results suggest that for a design payload less than about 600,000 lbs., conventional airplane design is economically advantageous; beyond that payload value, the distributed-load design is more attractive.

In view of the advantages in increased airplane size, the question of compatibility with current ground systems is paramount. Preliminary studies done at Boeing on a hub and spoke aerial distribution system have shown the economic viability of 11 major hubs worldwide. The results suggest that such an approach could be economically feasible after incorporating costs for modification of these centers to support large, distributed-load freighters.

Douglas Spanloader. - The distributed-load design from the Douglas Aircraft Company (ref. 24) also was an unswept configuration (Figure 19). Like the Boeing concept, the Douglas airplane has a rectangular planform, over-wing engines and has wingtip devices to improve aerodynamic efficiency. The Douglas design employs three bays (compared to 4 bays for Boeing) and a conventionally shaped fuselage (carrying no payload) which supports an empennage with both horizontal and vertical surfaces. The Douglas airplane still must contend with moderately high bending moments which peak near the wing-fuselage juncture. The Boeing design utilizes two slender struts or booms which permit an efficient diffusion of the loads into the wing. The Boeing airplane also employs a full-time load-alleviation system. The bending moments in flight are thus lower on the Boeing airplane. The Boeing design concept employs 20 landing gear locations compared to only five for the Douglas concept. The negative bending moment due to ground operations again is lower for the Boeing configuration. On the other hand, the Douglas design has a maximum tread width of only 142 feet compared to 180 feet for the Boeing spanloader; thus the Douglas airplane is more compatible with existing runways.

The Douglas study results indicated a benefit to wing sweep in reducing fuel consumption, empty weight and lowering operating costs. The preliminary swept design concept is shown in Figure 20 and indicates an 11 percent operating cost reduction over the unswept study configuration.

Lockheed Spanloader. - The final report on the Lockheed design is not yet available, but the study distributed-load configuration is shown in Figure 21. The Lockheed designers elected to carry 20 percent of the payload weight in a fuselage cargo bay capable of housing military oversized cargo (17 ft. width by 13.5 ft. height clearance). The remaining cargo would be carried in 8 ft. x 8 ft. containers in two wing bays.

The canards are required to provide adequate stability to counteract the fuselage weight. Maintaining the outsized cargo capability in this design concept degrades the payload fraction (payload divided by gross weight) somewhat because of the empennage weight and the concentrated loads at the wing root. There are also problems in loading the aircraft efficiently. The outsized cargo capability may be essential, however, for the military airlift requirement, and this design feature is only one of several potential compromises that may be required in arriving at a common design to satisfy both civil and military cargo requirements.

Taxi and Landing Loads. - The problem of distributing the loads on impact during landing or during ground operations may be a critical problem for the distributed load design. If these aircraft are to be compatible with current major terminal areas (200 ft. wide landing strips), then there is a limited gear tread width allowable. This constraint may impose an intolerable burden on the structure as shown in the Lockheed analysis in Figure 22. The effective skin thickness (t) determined by taxi loads is divided by the t required by maximum flight loads. If a 210 ft. tread width is permitted, this ratio remains at or below unity; if the tread width is constricted to 130 ft., then the effective skin thickness over the first 40 percent of the span must be increased well over 300 percent.

A Boeing analysis has shown, however, that the costs of widening runways can be a relatively minor economic penalty. Based on the Boeing spanloader study results, the addition of 210 ft. to a 150 ft. runway which is 12,000 ft. long would allow the Boeing distributed-load airplane to land. If 20 airports had to receive this modification and the annual capital costs for the modification was normalized by the specified annual throughput of 67 billion revenue ton-miles, then the additional costs incurred would amount to about 0.5 percent of typical costs shown for the Boeing distributed load airplanes.

CONCLUDING REMARKS

A review of the current operation of the air cargo system and a discussion of the prospects for the future indicate that if technological innovations can be brought to maturity and implemented, and if the efficiency of the interface with the surface modes can be improved, the air mode could show an unprecedented growth. The design of an advanced air freighter must incoporate the requirements of the marketplace in order to achieve commercial success.

1. Air cargo demand is forecasted to increase in a dynamic manner with estimates of growth varying from 11 to 16 percent per year up to 1985. The actual level of growth will be dependent on the degree of implementation of advanced technologies and on the level of success in dealing with operational and policy deterrents.

2. The concept of "Total Cost of Distribution" is shown to be a valuable device for determining the value of time saved by air shipment. In this approach, the transportation cost which is almost always higher for the air mode is shown to be only one element of the distribution costs to be considered by the shipper.

3. Stimulation of the demand for air freight service will result from the development of an integrated, intermodal system. The operation of this system will be synergetic by developing new market opportunities for all modes, including air transportation. Evolutionary changes will occur in both shipper and airline operations. The shipper will develop new inventory strategies and will find new markets for his products. The carrier will find new dedicated terminal area facilities to serve the aircraft and will benefit from computerized control and management of the cargo. Two recent programs which are directed toward such an integrated transportation system are Project INTACT and the proposal for a dedicated aerial trade center in Coalinga, California.

4. Several advanced freighter aircraft concepts are under study. Developments in Russia and Germany show intense foreign interest in developing new air cargo transport capabilities. NASA and U.S. industry studies have indicated that large gains in aircraft payload and fuel efficiency are possible from the application of advanced technologies and configuration concepts. For containerized payloads exceeding about 600,000 lbs., the studies show that the span-distributed load concept provides savings in operating costs over advanced fuselage-loaded designs. The distributed-load design benefits from reduced structural weight and from savings in design and construction costs due to part commonality.

REFERENCES

1. Handbook of Airline Statistics - 1973 Edition, Civil Aeronautics Board.

2. Quarterly Cargo Review, Twelve Months Ending December 1974. Civil Aeronautics Board, Statistical Analysis Section, Economic Evaluation Division, Bureau of Accounts and Statistics.

3. Jackson, Richard M.: Important Aspects of International Air Cargo. Astronautics and Aeronautics, pp. 50-53, April 1975.

4. Goodmanson, Lloyd T.: Development of the Dedicated Air Freighter. Boeing Commercial Airplane Company, Presentation to Third Intersociety Conference on Transportation, Atlanta, Georgia, July 18, 1975.

5. Smick, A. Edward: Cargo Handling; Needed - A Marketing Systems Approach. Trans World Airlines, Inc., Astronautics and Aeronautics, January 1970.

6. Bienn, Albert: Is It Air Freight? Boeing Scorecard Says Yes or No! Traffic World, September 16, 1974.

7. Schneider, L. M.: The Future of the U.S. Domestic Air Freight Industry, Harvard University, 1973.

8. Jackson, Paul; and Breckenridge, William: Air Cargo Distribution, Gower Press Ltd., London, 1971.

9. Aschenbeck, Lloyd B.: Air Freighters of the Future. Douglas Aircraft Company, Third Intersociety Conference on Transportation, Atlanta, Georgia, July 14-18, 1975.

10. Herron, D. P.: Expanding Air Freight Horizons by Use of the Air Freight Probability Factor. Conference Proceedings of the Seventh International Forum for Air Cargo, October 1-3, 1975.

11. Electronic Equipment - A Brief Total Cost of Distribution Analysis. ER 19517, The Lockheed-Georgia Company, June 1969.

12. California Lettuce - A Brief Total Cost of Distribution Analysis. ER 10518, The Lockheed-Georgia Company, June 1969.

13. Ribaut, J. C.: Paris Airport Authority Actively Promotes Air Freight, ICAO Bulletin, pp. 18-22, November 1975.

14. Levin, Stuart M.: Uncompromised Cargo - the Mach .9 Box. Space/Aeronautics, pp. 34-44, October 1969.

15. McNulty, J. J.: Intermodality and the Freight Forwarder. Proceedings of the Seventh International Forum for Air Cargo, October 1-3, 1974.

16 Norris, John T.: The Facts About Project INTACT (Intermodal Air Cargo Test). Department of Transportation, October 1974.

17. Gallagher, Patrick: The End of Intact - It Was Only A Beginning, Handling and Shipping, June 1976.

18. Aviation Week and Space Technology, vol. 103, no. 19, pp. 40, November 10, 1975.

19. Dornier, C., Jr.: Considerations on the Future Tasks of the European Aeronautical Industry in the Field of Civil Aviation. L'Aeronautique et L'Astronautique, no. 51, pp. 2-13, 1975.

20. Air Cushion Vehicles, USSR; Jane's Surface Skimmers, pp. 120-121, 1974-75.

21. Whitener, C. P.; Gratzer, B. L.; and Whitlow, D. H.: Technical and Economic Assessment of Span Distributed Loading Cargo Aircraft Concepts. Boeing Company, NASA CR-144963, June 1976.

22. Whitehead, A. H., Jr.: Preliminary Analysis of the Span Distributed Load Concept for Cargo Aircraft Design. NASA Langley Research Center, NASA TM X-3319, 1975.

23. Whitehead, A. H., Jr.: Perspective on the Span-Distributed Load Concept for Application to Large Cargo Aircraft Design, NASA Langley Research Center, NASA TM X-3320, 1975.

24. Malthan, V. L.: Technical and Economic Assessment of Span Distributed Loading Cargo Aircraft Concepts. Douglas Aircraft, NASA CR-144962, July 1976.

25. Cleveland, F. A.: Size Effects in Conventional Aircraft Design. Journal of Aircraft, vol. 7, no. 6, November-December 1970.

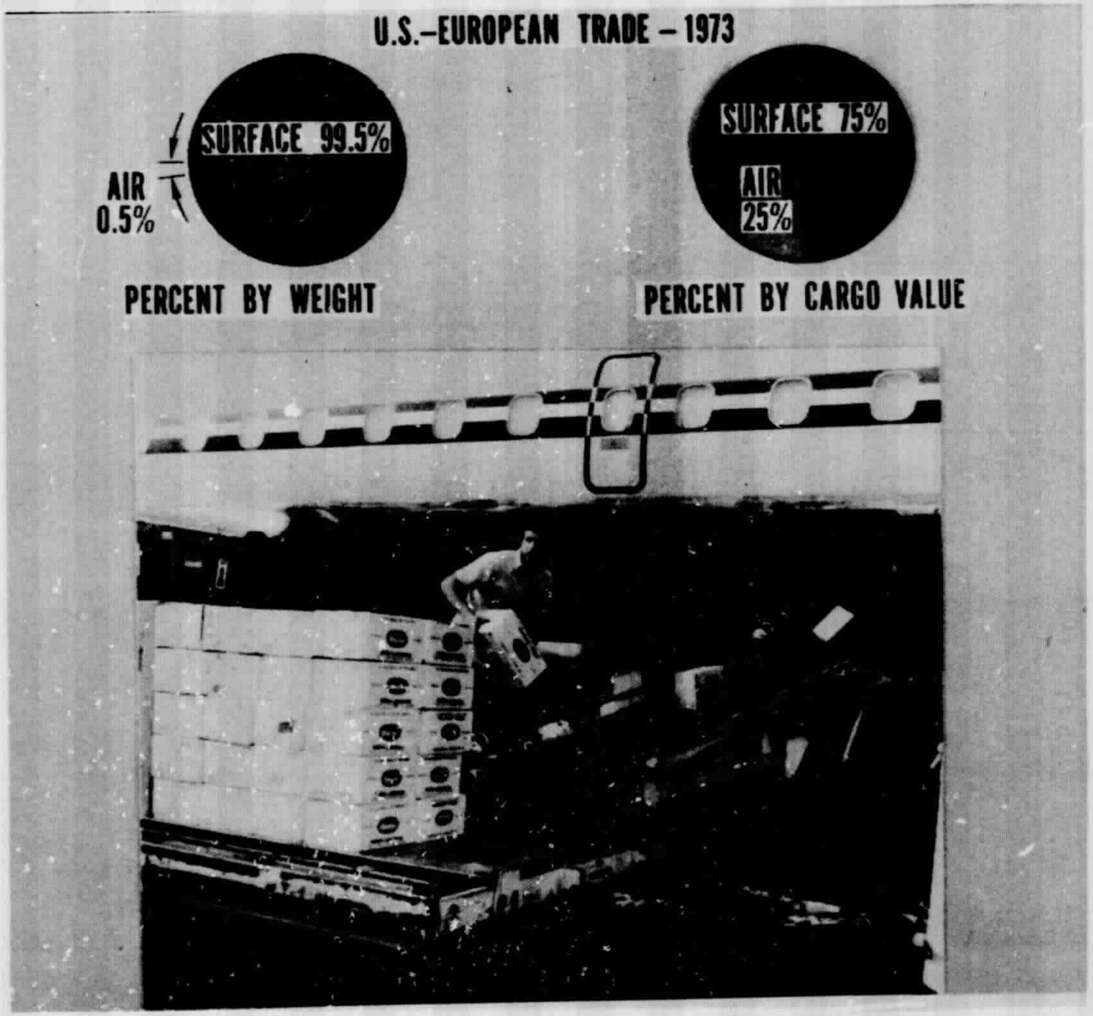

Figure 1. - Some aspects of current air cargo environment

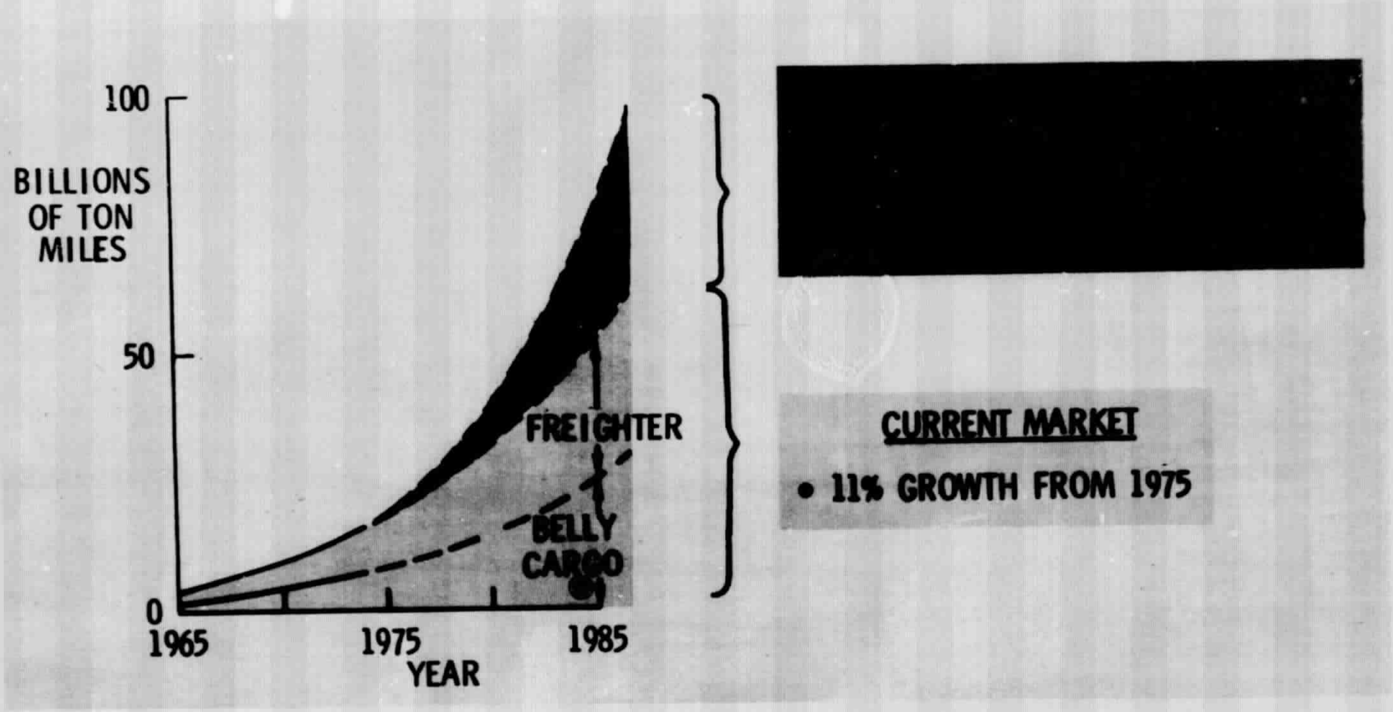

[redacted]

CURRENT MARKET

- 11% GROWTH FROM 1975

Figure 2. - History and forecast of air cargo growth

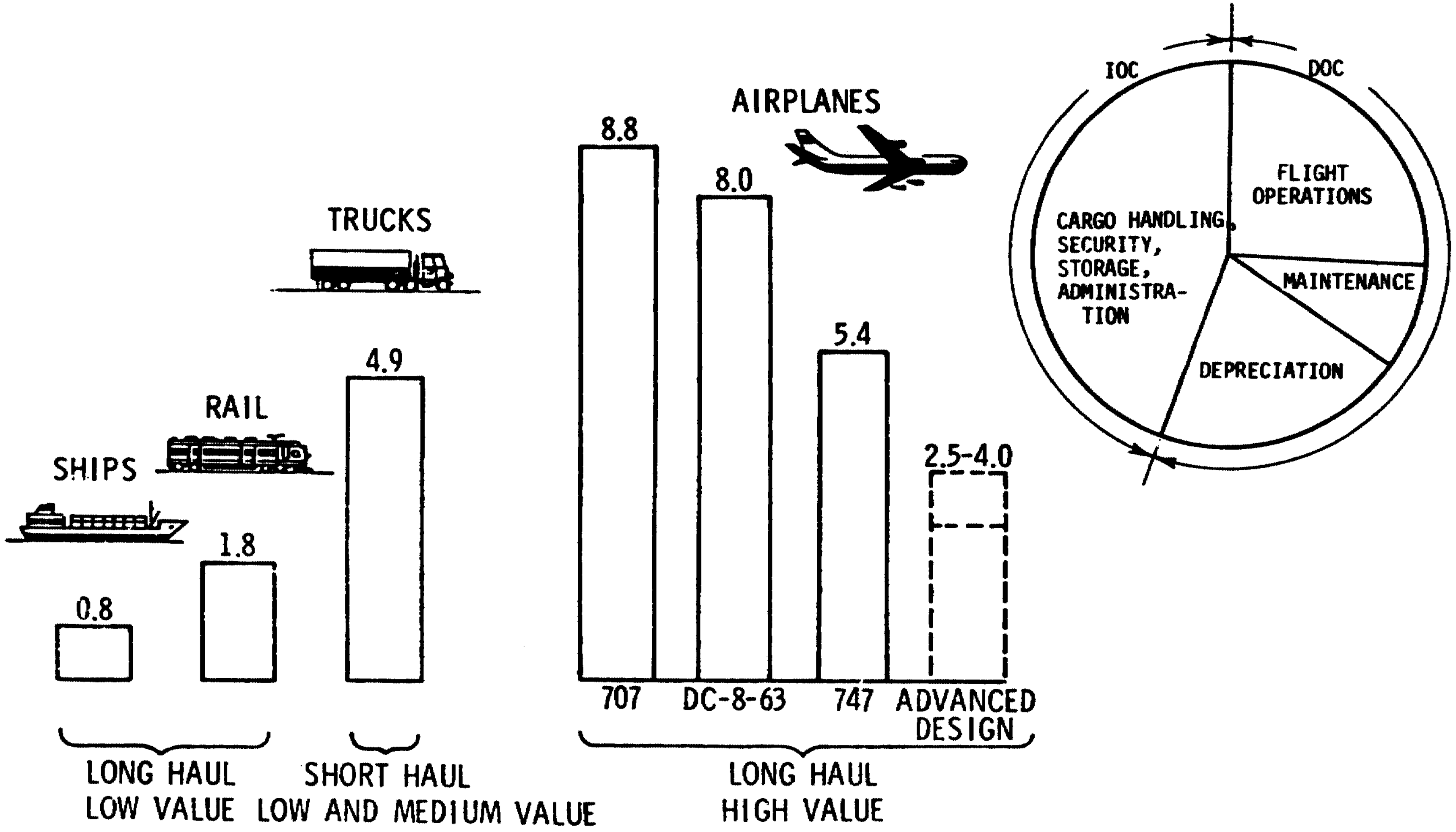

Figure 3. - Comparison of direct operating costs (DOC) in cents ton-mile, 1973 data

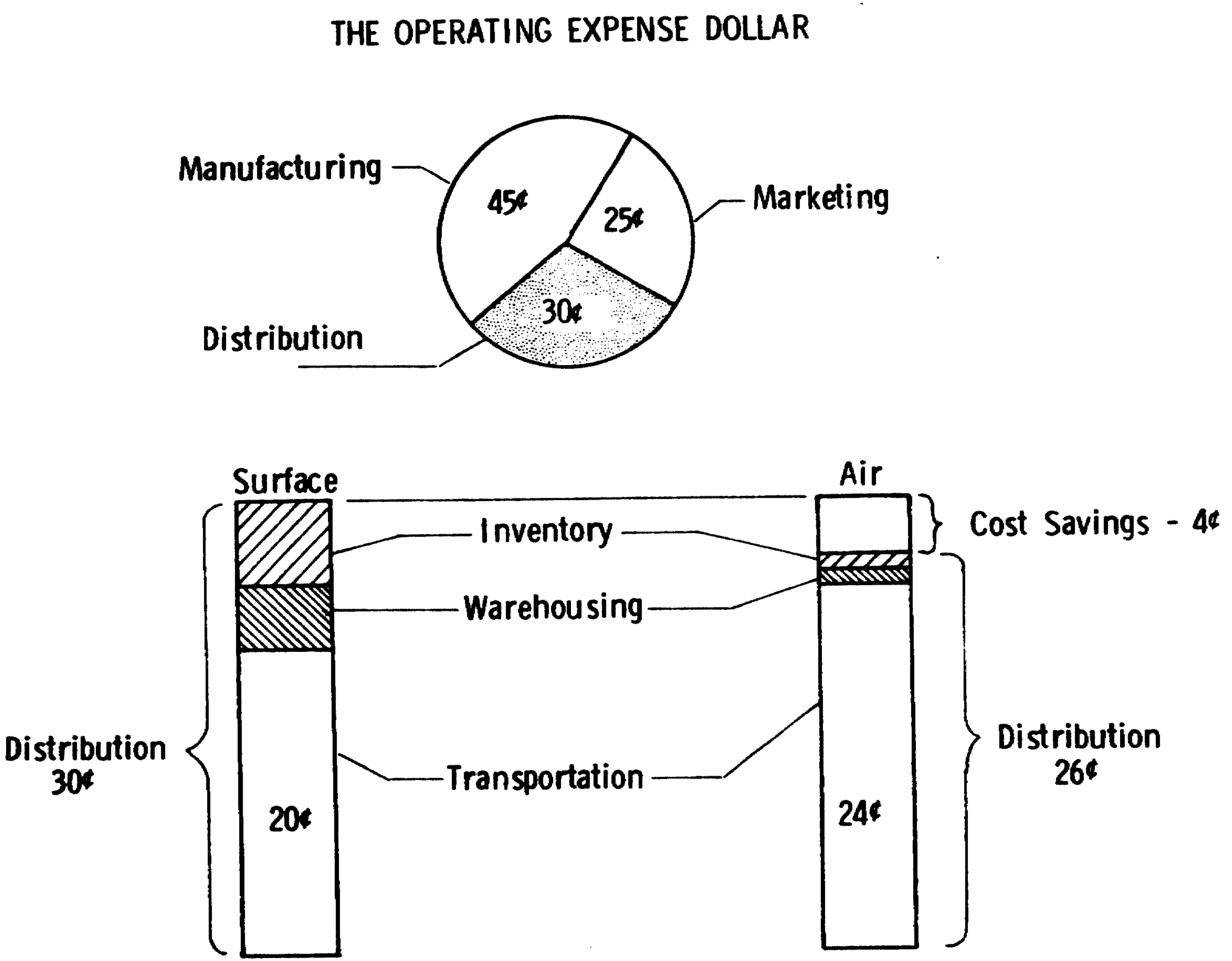

THE OPERATING EXPENSE DOLLAR

Figure 4. - The concept of total distribution costs (typical of appliance industry)

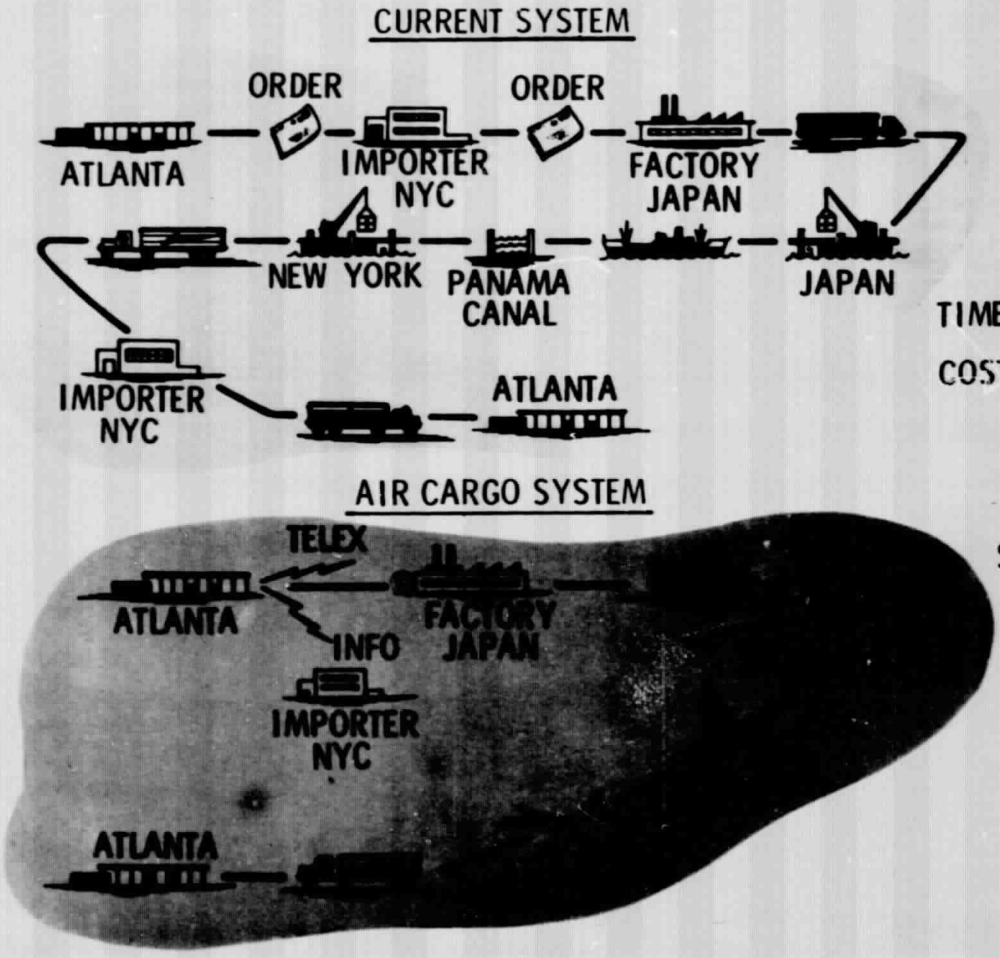

	CURRENT SYSTEM	AIR CARGO SYSTEM
TIME, days	100	4
COST/UNIT	$52	$36

AIR MODE PROVIDES A 2500% TIME SAVINGS AND A 30% NET COST SAVINGS

Figure 5. - Transportation of TV sets from Japan to Atlanta - air vs. surface mode

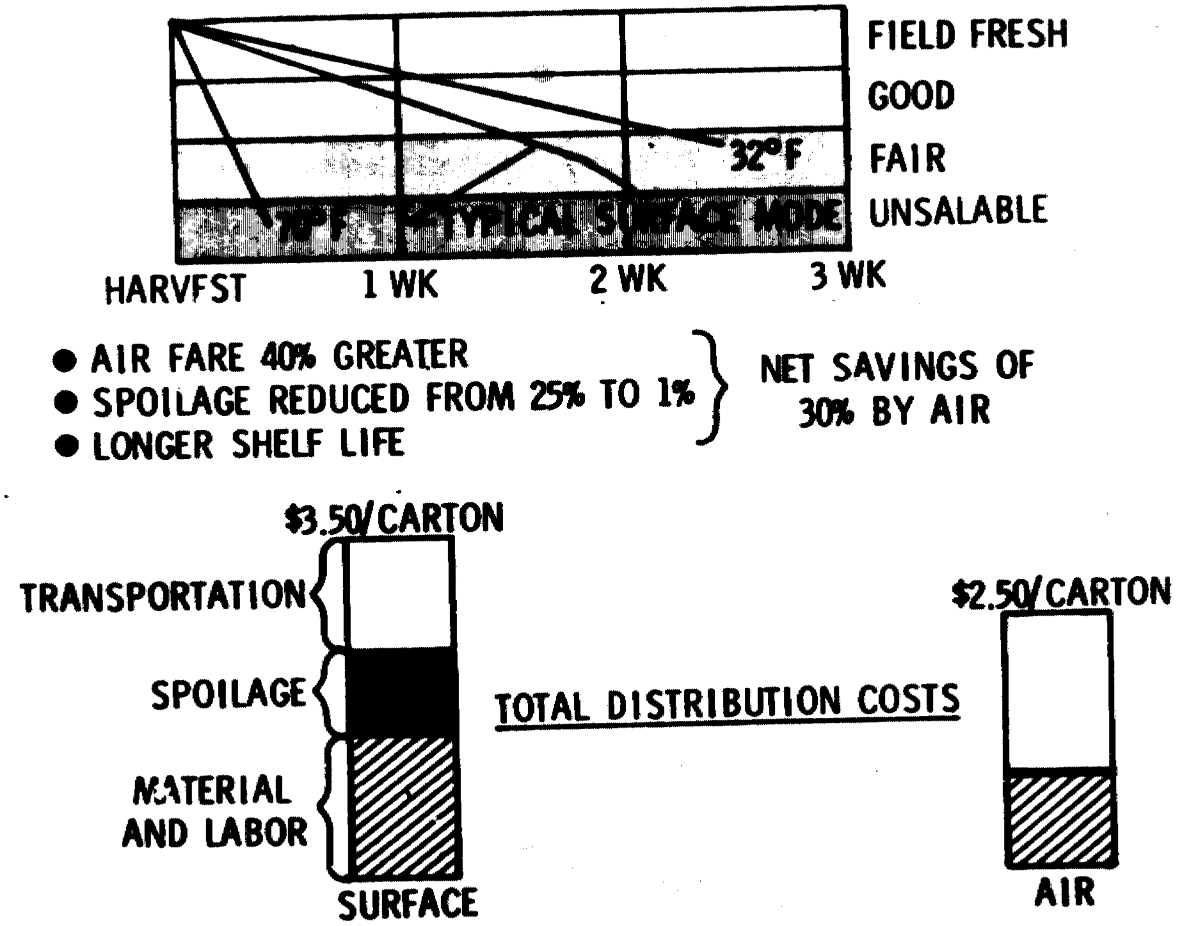

- AIR FARE 40% GREATER
- SPOILAGE REDUCED FROM 25% TO 1%
- LONGER SHELF LIFE

NET SAVINGS OF 30% BY AIR

Figure 6. - Transportation of California lettuce to East Coast - air vs. surface mode

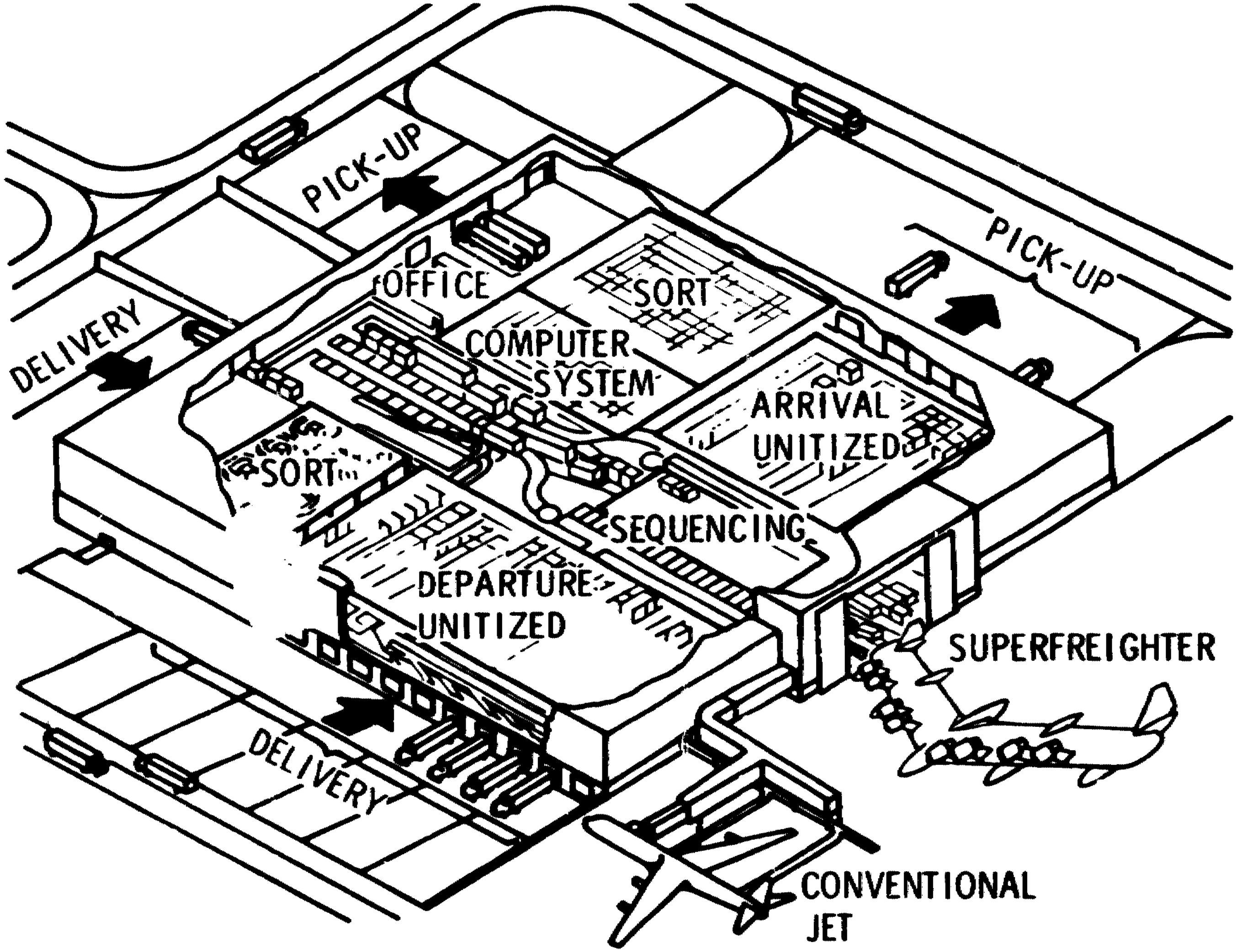

Figure 7. - Conceptual illustration of a future air cargo terminal area system

FRESNO BEE April 24, 1975

Coalinga Cargo Port

West Side City's Leaders Launch Plans To Become Worldwide Aerial Trade Center

Figure 8. - Illustration of future cargo-port planning

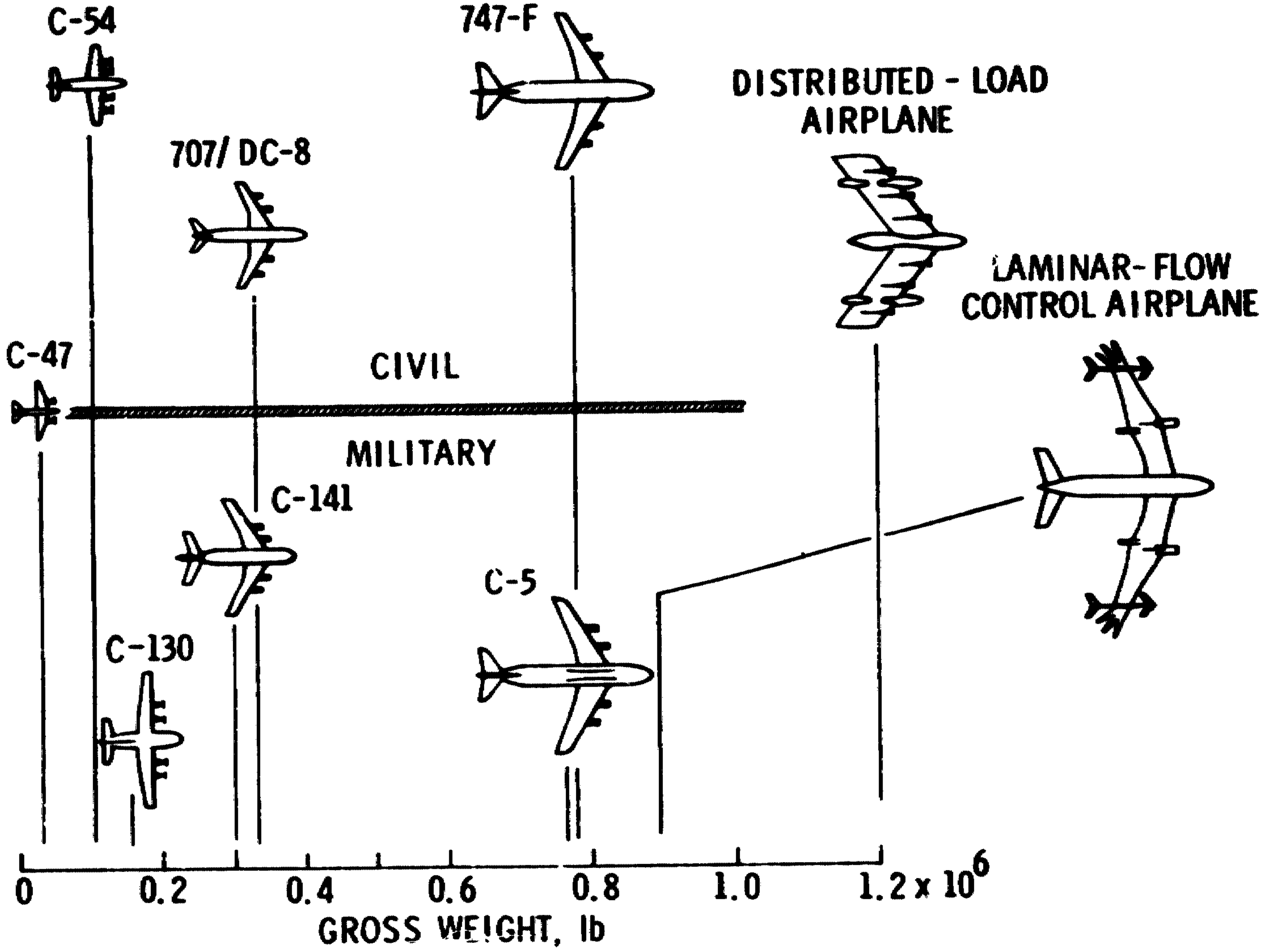

Figure 9. - Key aircraft in the evolution of air freighter design

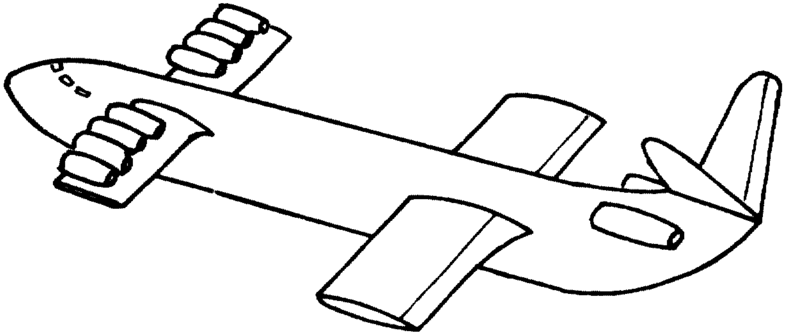

SOVIET EKRANOPLAN
(Wing in Ground Effect-Wig)

Span ~ 125 ft
Length ~ 400 ft
Speed ~ 300 knots
Operates at 25-50 ft over water
10 gas turbine engines

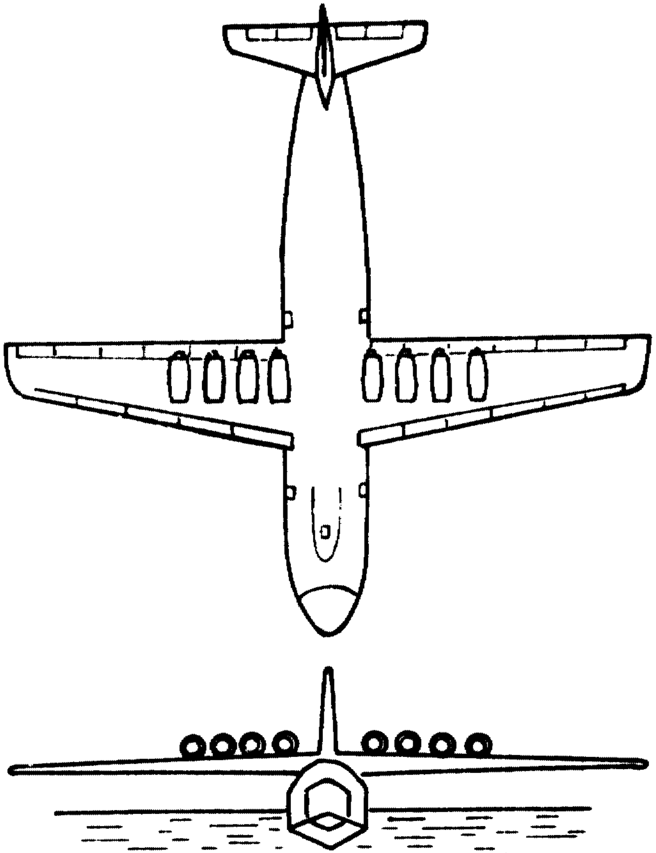

DORNIER FLYING SHIP
(Nose-Loading)

Span = 334 ft;   Length = 340 ft
Speed = 440 kts; Range = 4000 n.mi.
Gross weight = 2.2 million pounds

Figure 10. - Foreign developments in large cargo aircraft

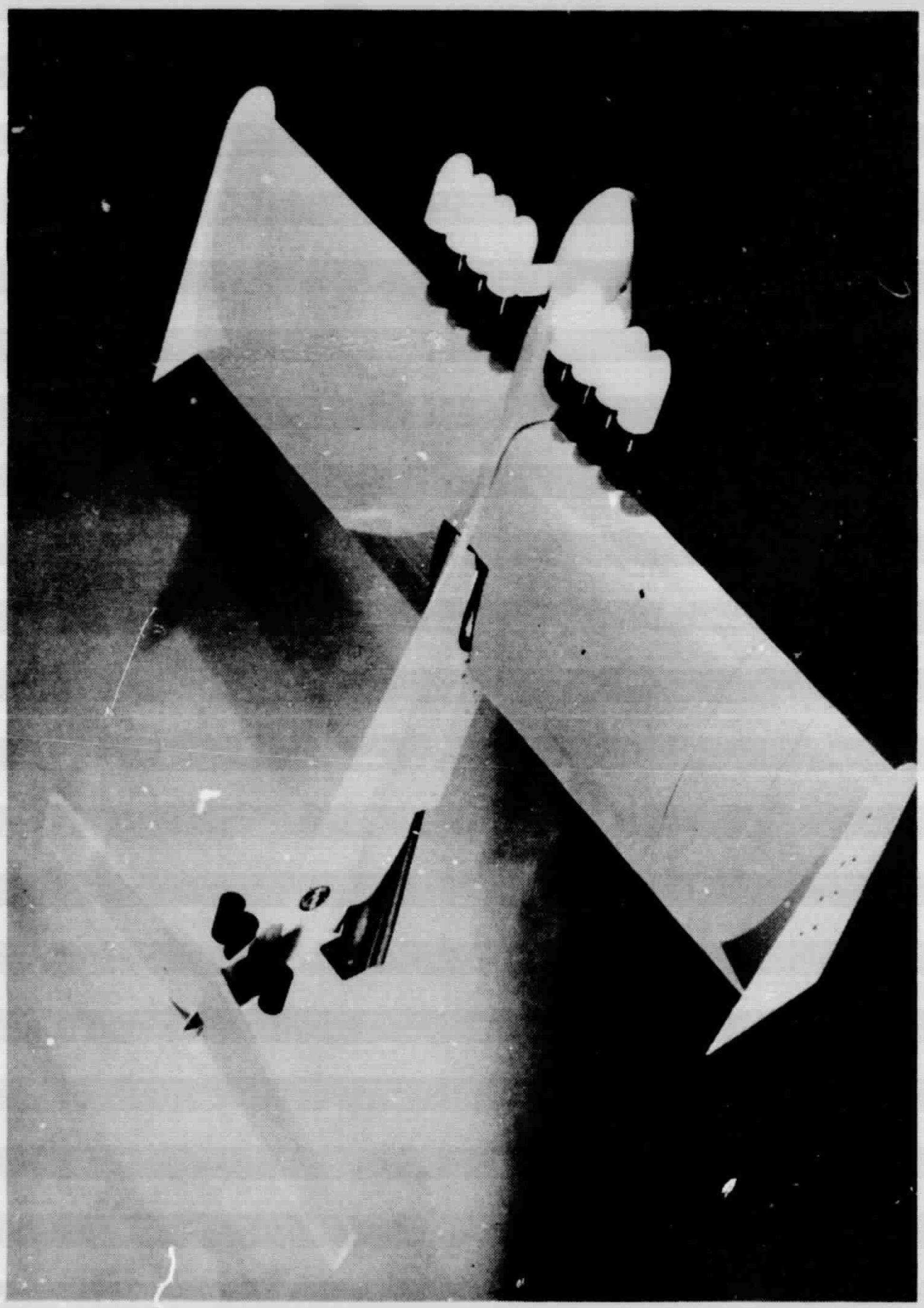

Figure 11. - Surface effect configuration

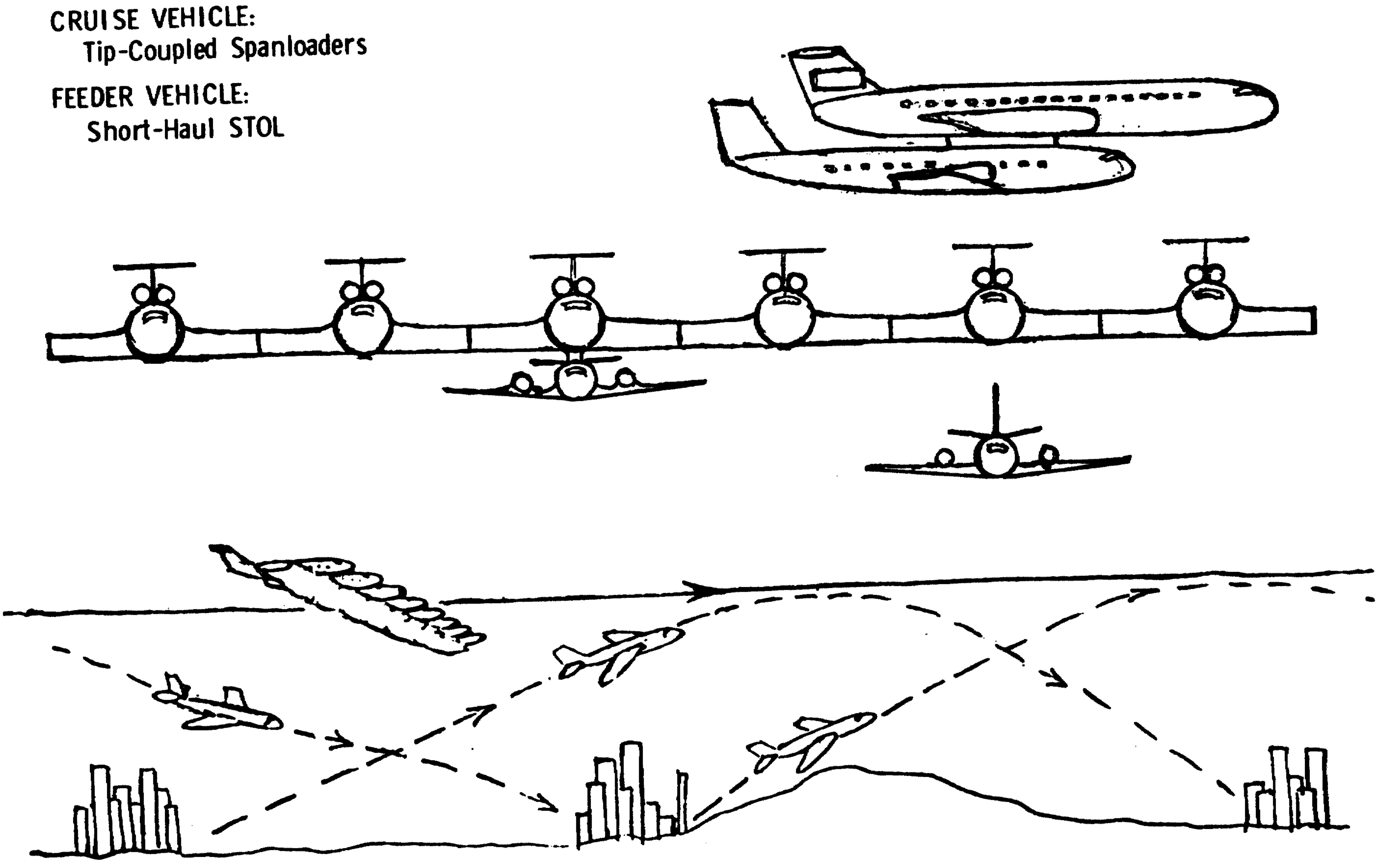

Figure 12. - In-flight transfer system with wing-tip coupled aircraft

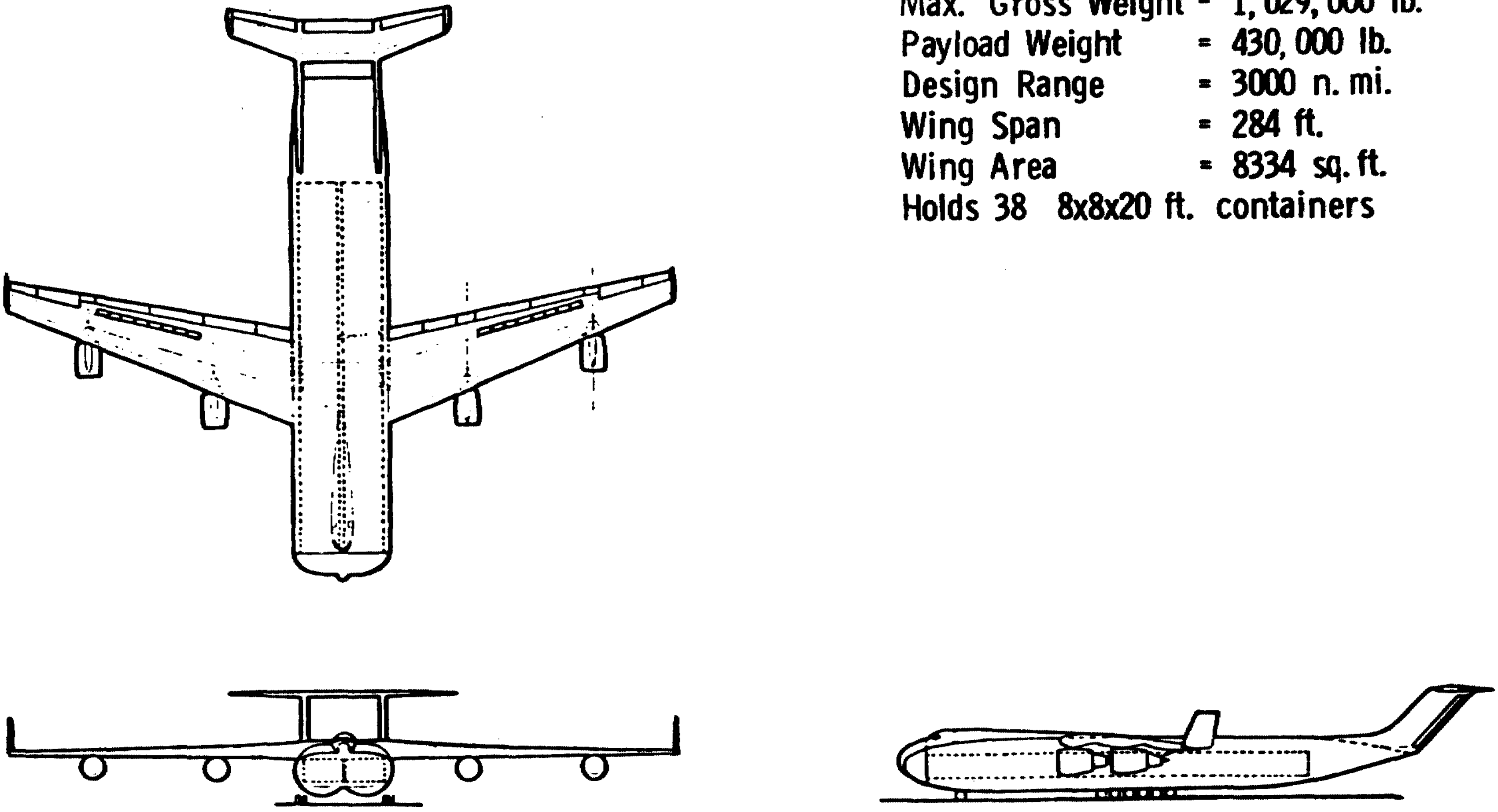

Max. Gross Weight = 1,029,000 lb.
Payload Weight = 430,000 lb.
Design Range = 3000 n. mi.
Wing Span = 284 ft.
Wing Area = 8334 sq. ft.
Holds 38 8x8x20 ft. containers

Figure 13. - Advanced cargo aircraft design - The Boeing Commercial Airplane Company

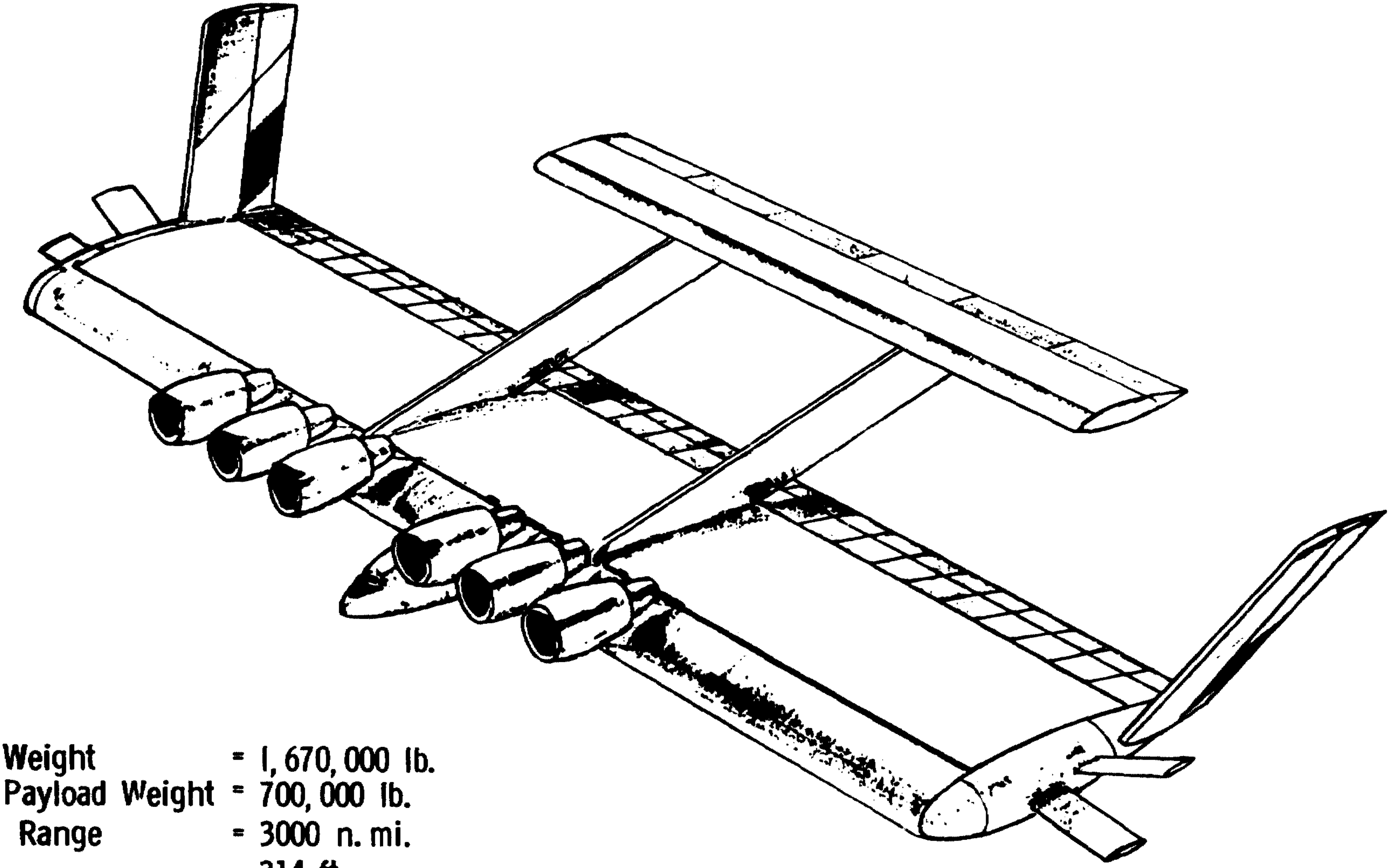

Gross Weight = 1,670,000 lb.
Gross Payload Weight = 700,000 lb.
Design Range = 3000 n. mi.
Span = 314 ft.
Wing Area = 18,620 sq. ft.
Holds 52 8x8x20 ft. containers

Figure 14. - The Boeing span-distributed load, cargo aircraft concept

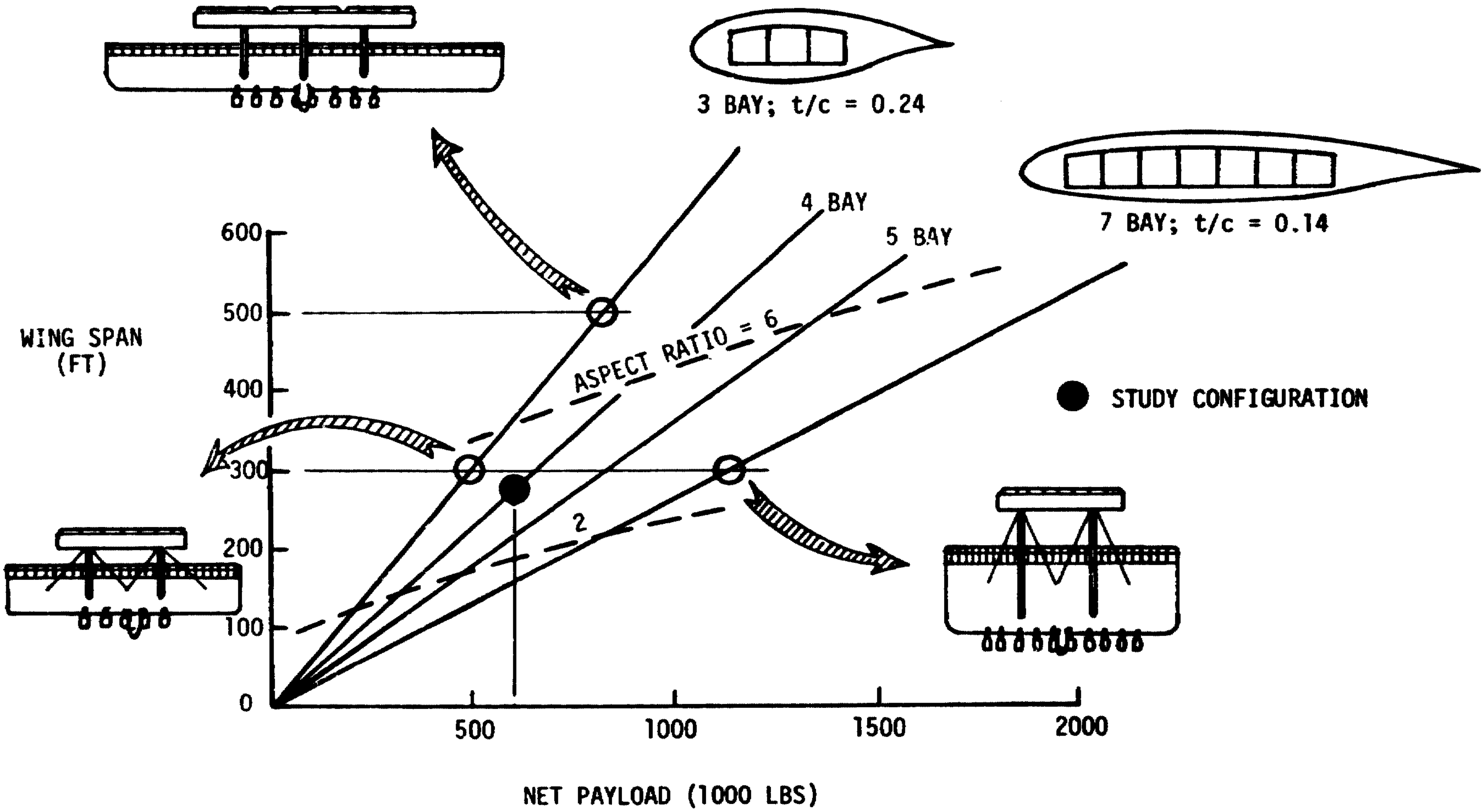

Figure 15. - Configuration geometrical relationships for distributed-load design; net payload density of 10 lbs. cu. ft.

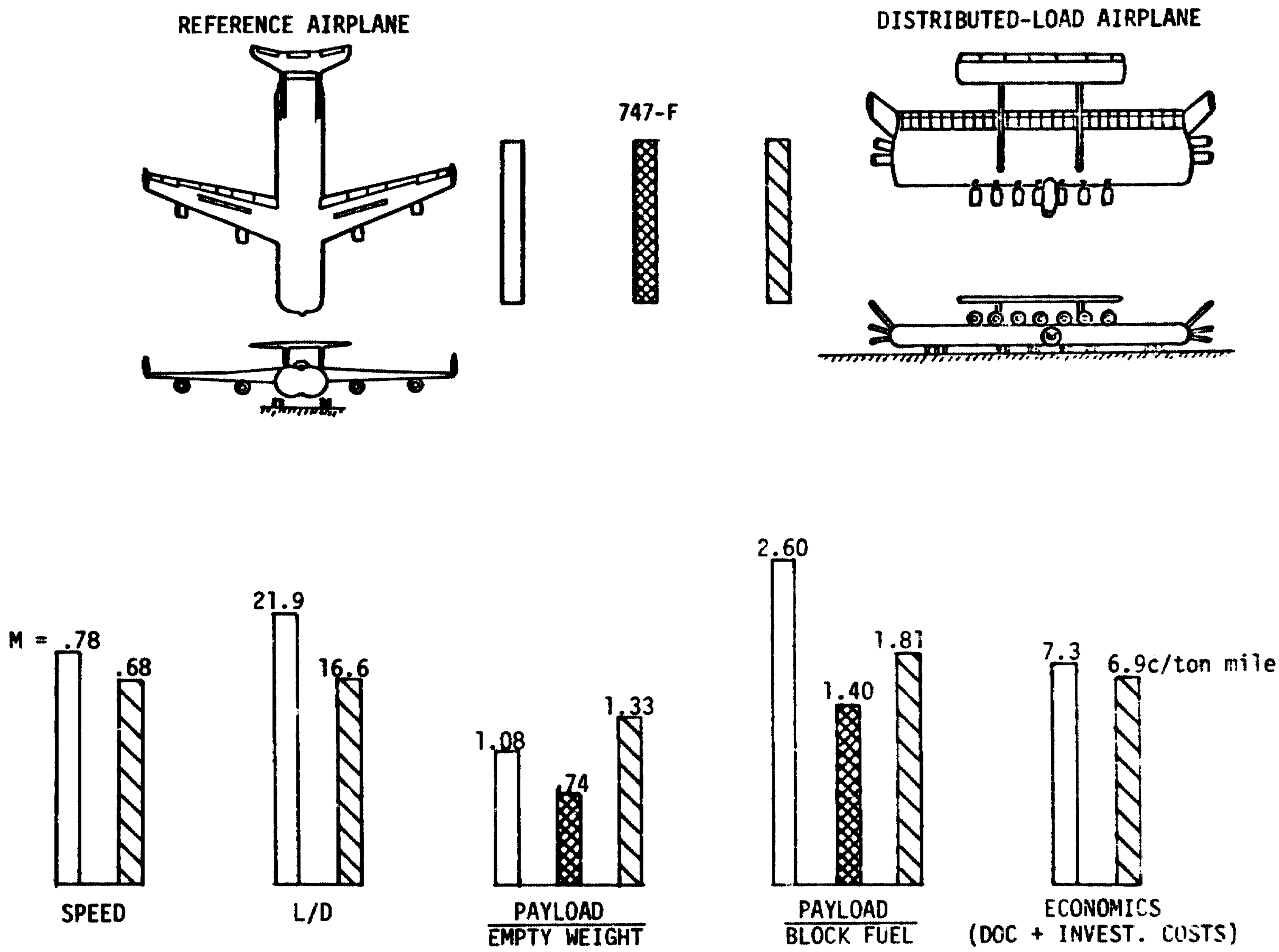

Figure 16. - Comparison of distributed-load and reference airplanes

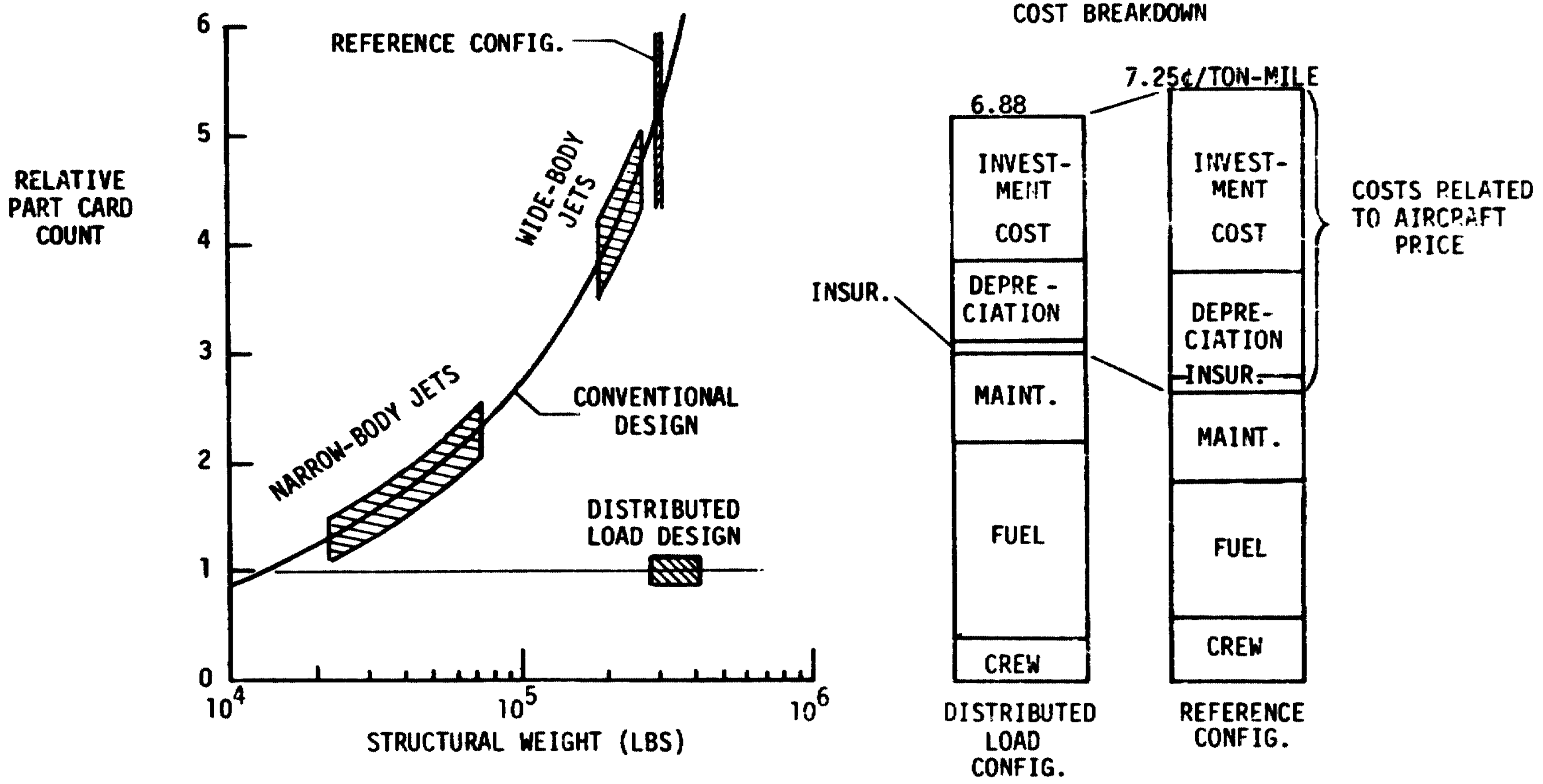

Figure 17. - Cost analysis from Boeing study results

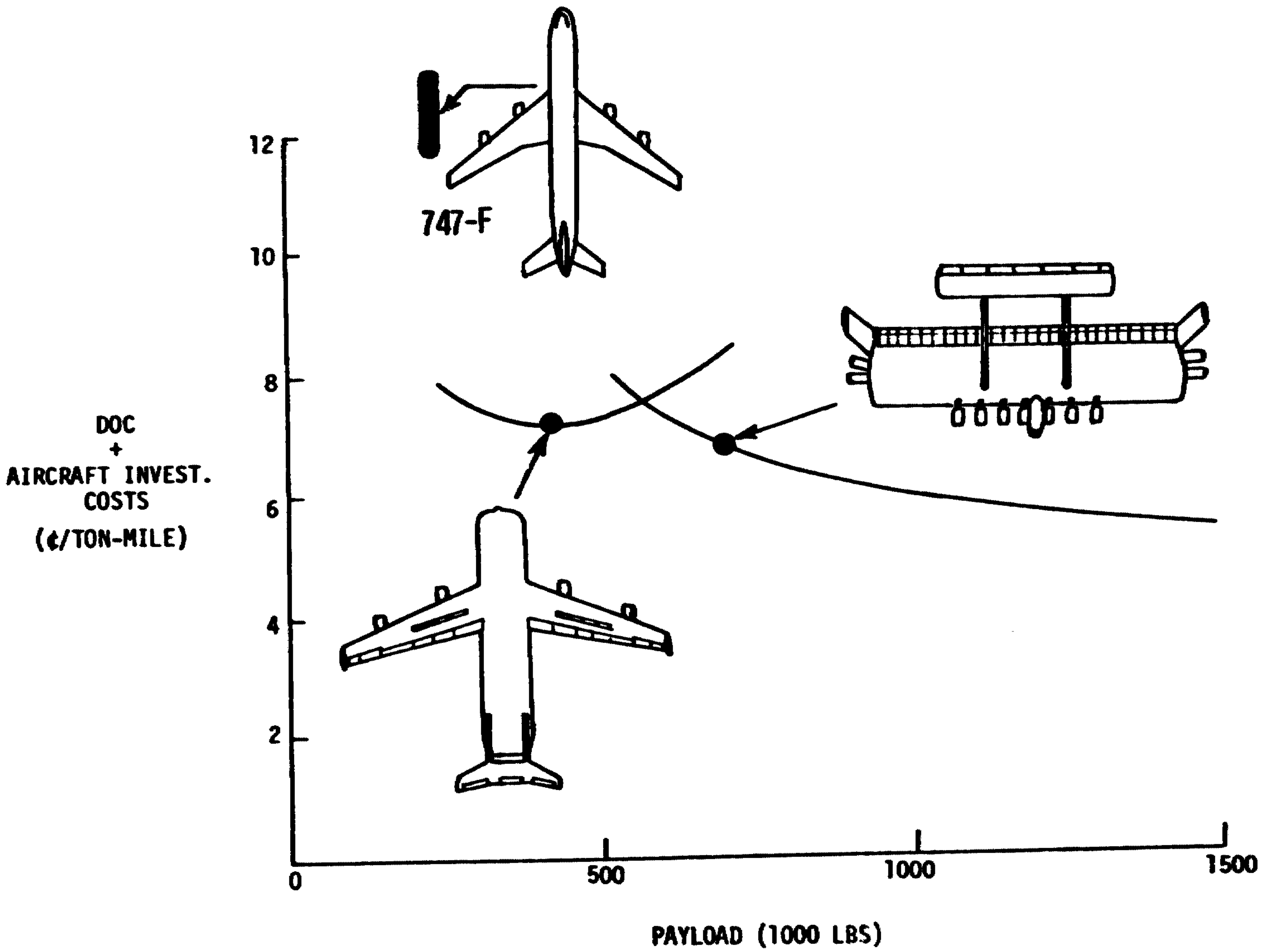

Figure 18. - Economic potential of advanced design concepts

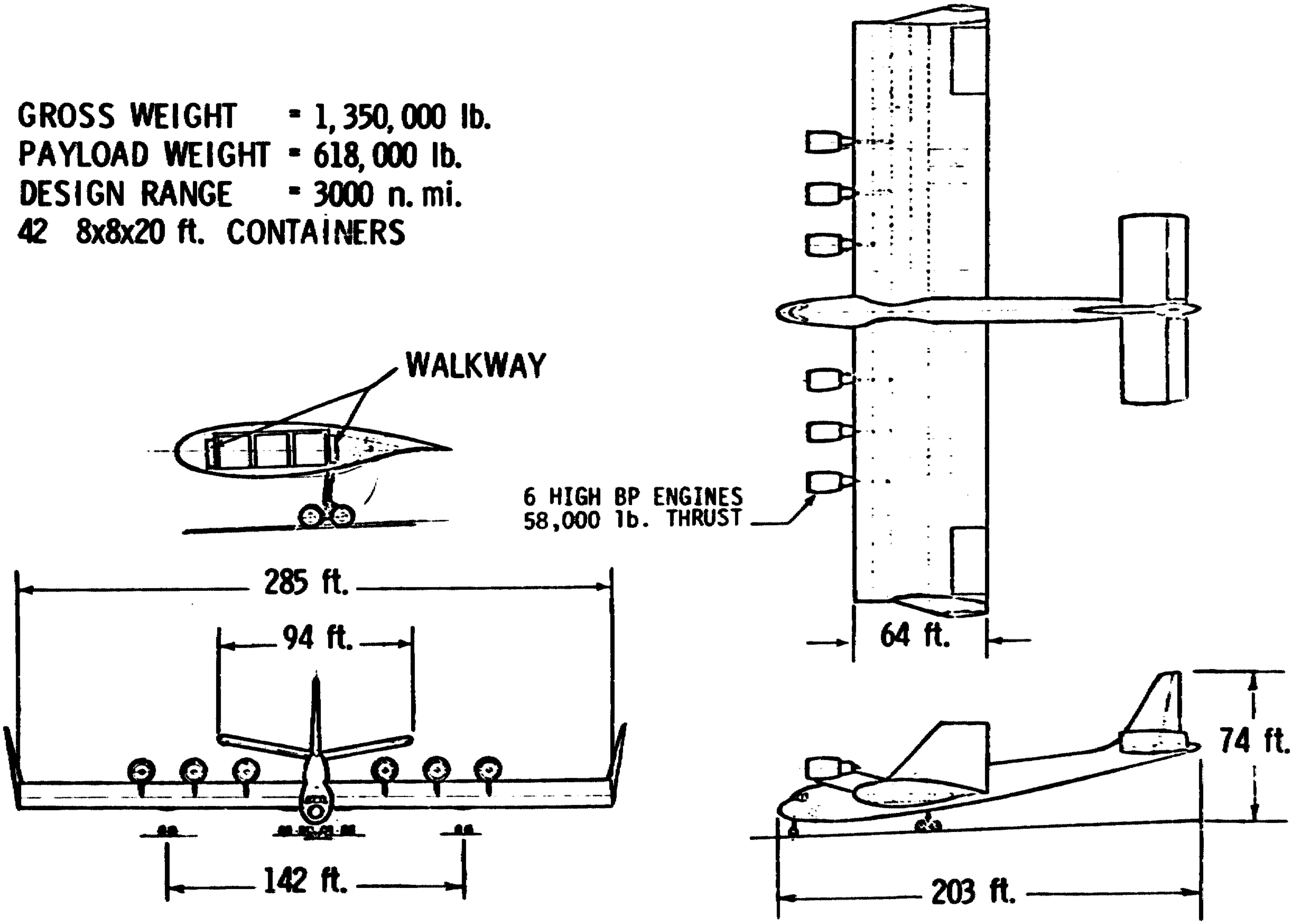

Figure 19. - The Douglas span-distributed load concept

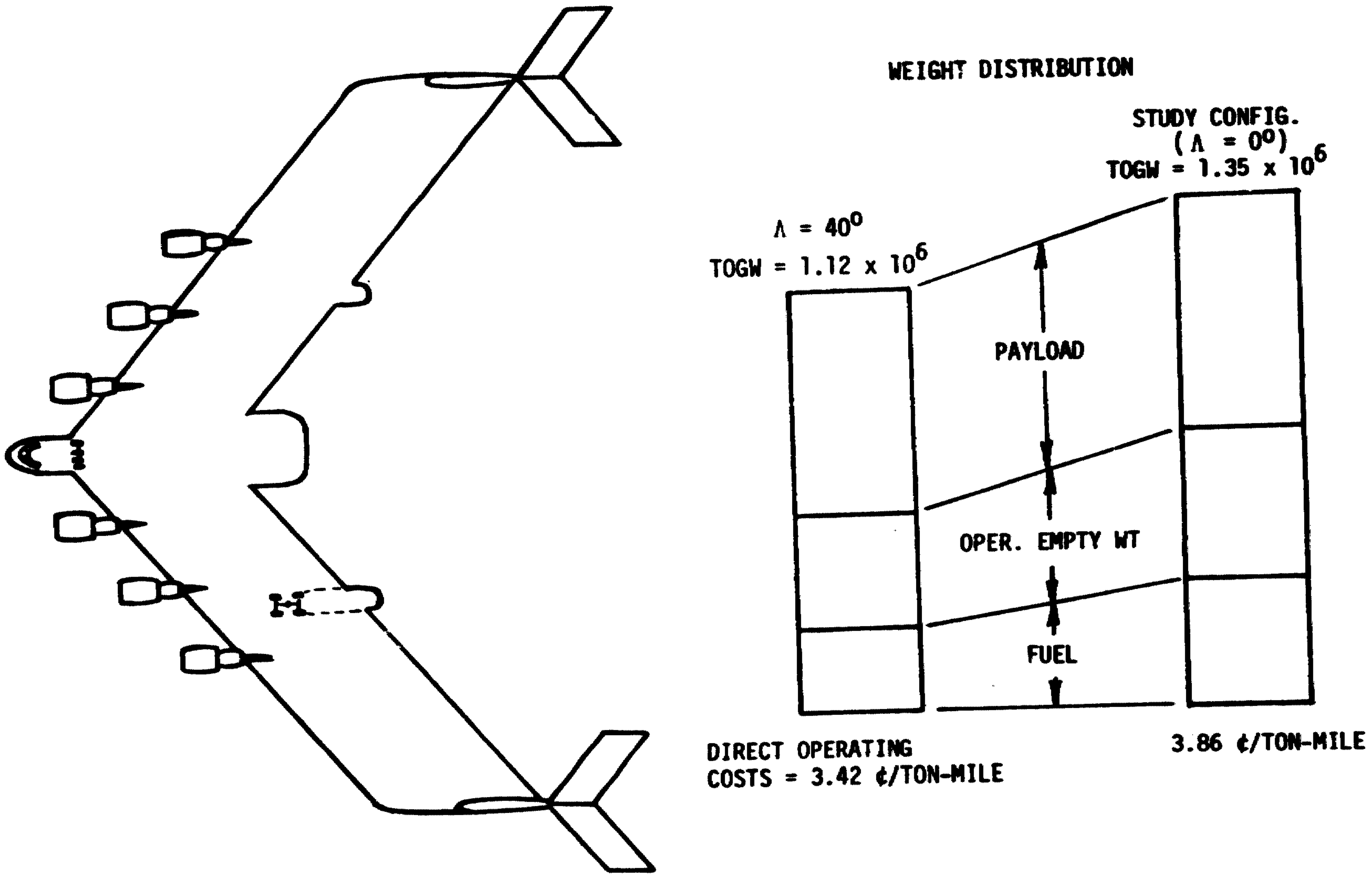

Figure 20. - Advantage of wing sweep for reducing weight and costs (Douglas)

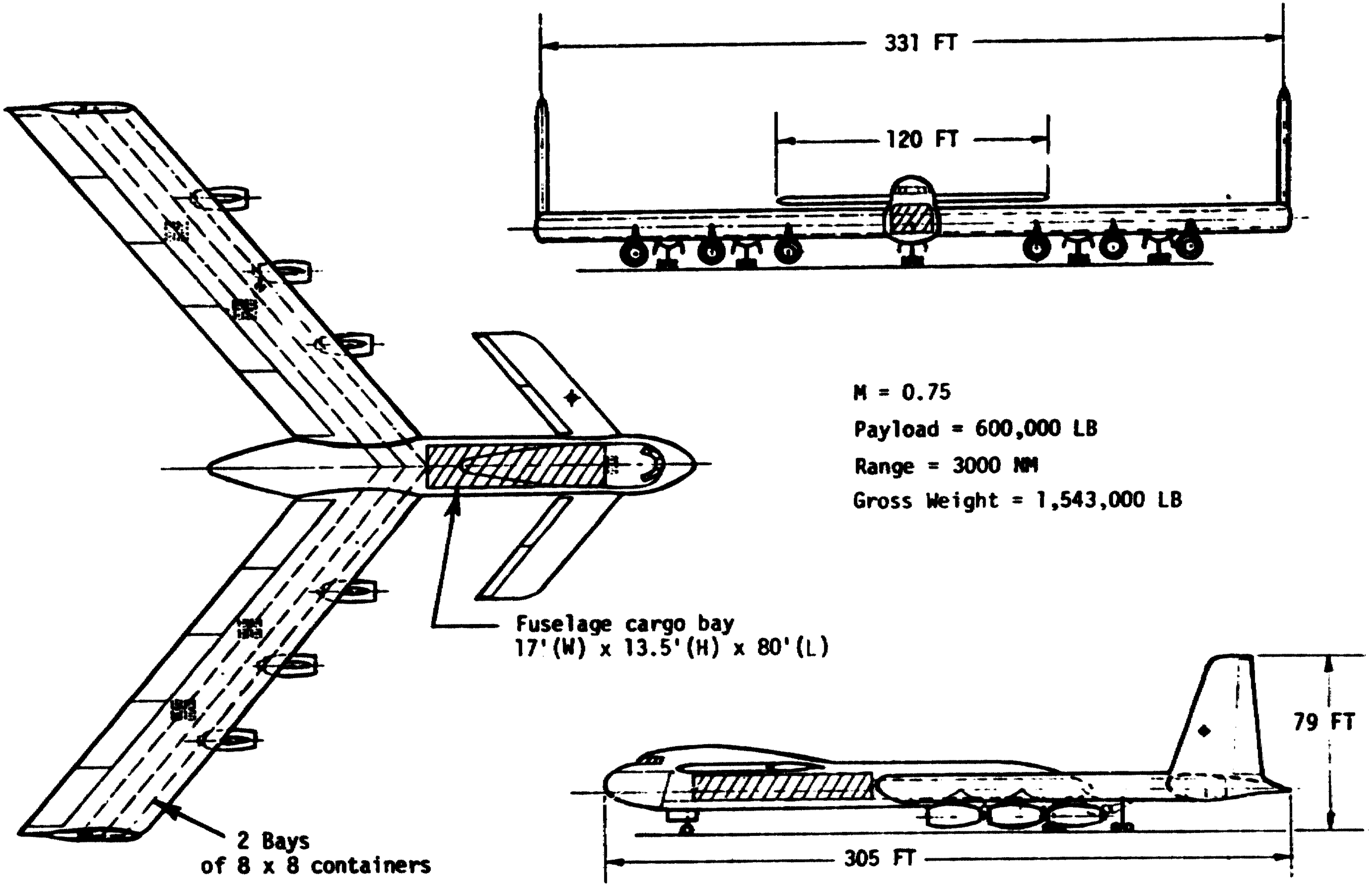

Figure 21. - The Lockheed-Georgia span-distributed load concept

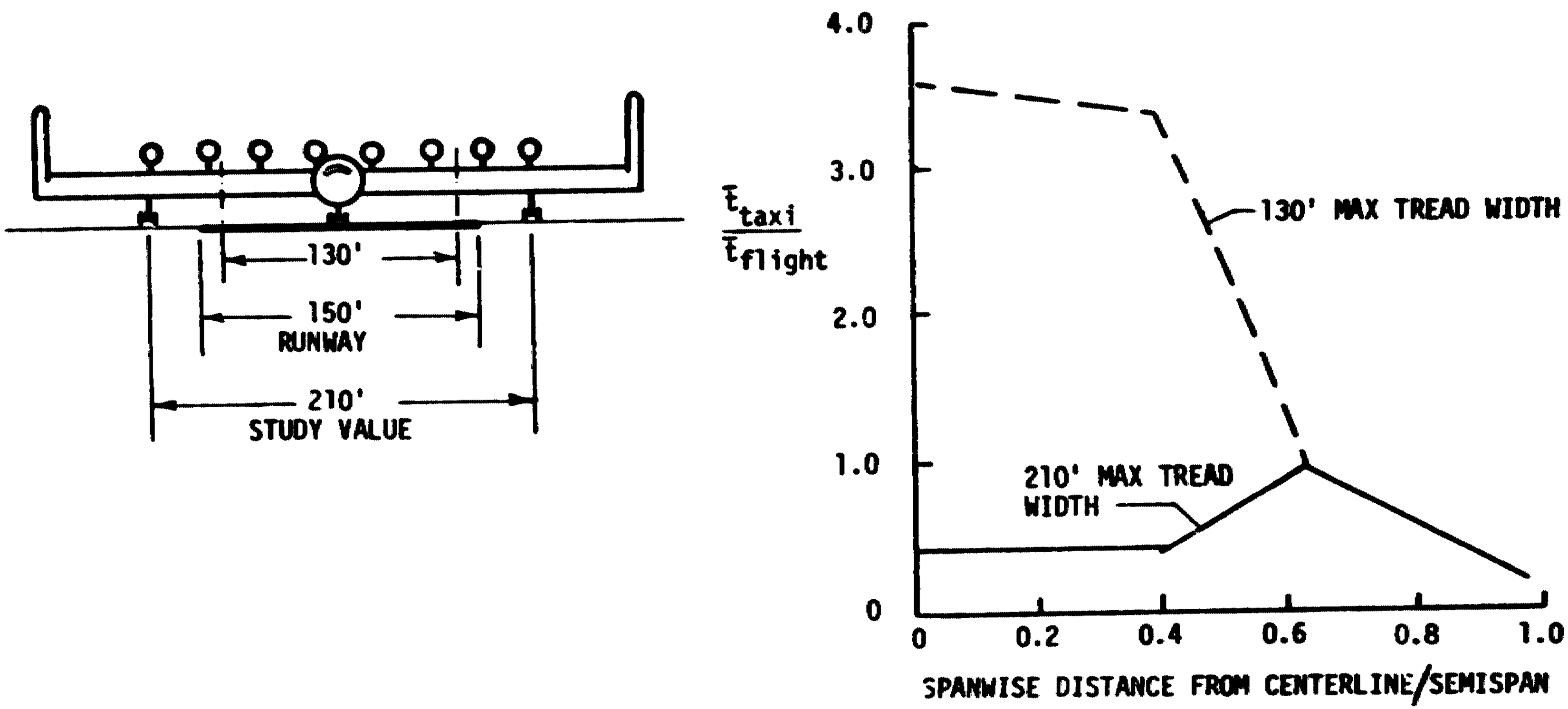

Figure 22. - Effect of landing gear tread width on required affective skin thickness (Lockheed-Georgia study)