Hawai‘i Natural Energy Institute Research Highlights

Grid Integration & Energy Efficiency

Advanced Power System Laboratory (APSL)

OBJECTIVE AND SIGNIFICANCE: HNEI Grid*START* has designed and equipped its new Advanced Power System Laboratory (APSL) to conduct research, development, test, and evaluation (RDT&E) in support of power systems modernization and renewable energy integration. The APSL has a highly flexible architecture and is the first laboratory of its kind in Hawai‘i – able to test AC and DC devices, systems, and microgrids within a managed field representative electrical environment. The lab will significantly enhance HNEI’s ongoing research endeavors by providing a state-of-the-art test environment that extends its RDT&E capabilities to deliver next-generation smart grid technologies.

BACKGROUND: The APSL comprises of significant components, including three AC/DC equipment test bays and a 35 kW rooftop PV system connected to four advanced PV inverters with grid support functions (Figure 1). This PV system serves a dual purpose, supporting the lab’s research needs and assisting the University of Hawai‘i in achieving its net zero energy consumption goal. Additionally, the lab hosts a real-time grid simulator connected to a 30 kVA power amplifier, facilitating power hardware-in-the-loop (HIL) testing. The power HIL system enables researchers to evaluate electrical power equipment as a unit under test (UUT) in a real-time simulated grid environment.

The three modular AC/DC test bays (see Figure 2) have been designated for evaluating advanced functions, communications and controls of various UUT. These include advanced PV inverters, EV chargers those with vehicle-to-grid (V2G) and vehicle-to-home (V2H) bidirectional power flow capabilities, battery energy storage systems (BESS), power monitoring and edge computing devices, AC or DC loads/appliances and load control devices, and voltage management equipment, among other innovative technological solutions.

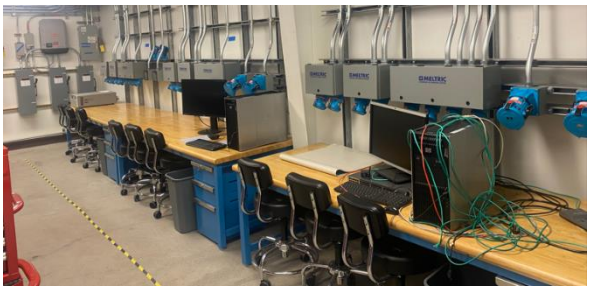

Figure 2. Three AC/DC equipment test bays.

PROJECT STATUS/RESULTS: The design, permitting, and construction of the electrical infrastructure of the APSL are now complete, rendering the lab available for use. In addition, there is an ongoing procurement process for a microgrid control system that encompasses integrated microgrid modeling tools and the capability to seamlessly integrate with the APSL’s existing power HIL system. This integrated system will empower HNEI to introduce a comprehensive microgrid design and control training curriculum aimed at power system engineers across the Asia-Pacific region. Furthermore, the APSL and its power HIL equipment will be employed in tandem with HNEI Grid*START*’s field-deployed microgrid testbed on Coconut Island for the development and testing of new, resilient microgrid control algorithms. These algorithms will address dynamic load management, facilitated by a recently secured U.S. DOE-sponsored research grant of approximately $1 million.

Funding Source: Office of Naval Research

Contact: Leon Roose, lroose@hawaii.edu

Last Updated: November 2023

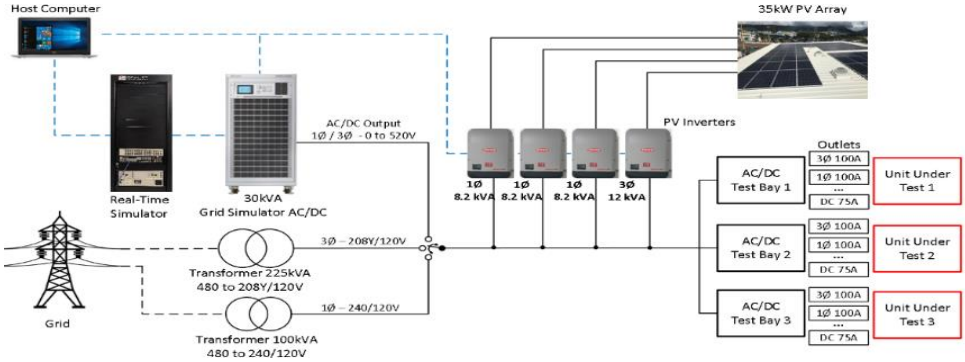

Figure 1. HNEI Grid*START*’s Advanced Power System Lab architecture.

Hawai‘i Natural Energy Institute | School of Ocean & Earth Science & Technology
University of Hawai‘i at Mānoa, 1680 East-West Road, POST 109 • Honolulu, HI 96822
Phone: (808) 956-8890 • Fax: (808) 956-2336 • www.hnei.hawaii.edu