RC10 SC6.1 TEAM KIT

1:10 Scale 2WD Electric Off Road
Competition Short Course Truck Kit

#70007 RC10SC6.1 Team Kit

KIT ASSEMBLY REQUIRED

1:10 Scale 2WD Electric Off Road Competition Short Course Truck Kit Manual & Catalog

CHAMPIONS by DESIGN
TeamAssociated.com

TEAM ASSOCIATED

:: Introduction

Thank you for purchasing this Team Associated product. This assembly manual contains instructions and tips for building and maintaining your new vehicle. Please take a moment to read through the manual and familiarize yourself with the steps.
We are continually changing and improving our designs; therefore, actual parts may appear slightly different than the illustrations. New parts will be noted on supplementary sheets located in the appropriate parts bags. Check each bag for these sheets before you start to build.

:: RC10SC6.1 KIT Features

- Reverse bellcrank steering allows more room for mounting electronics
- Precision ground steering bellcrank screws to reduce steering slop
- Bolt on steering block arms for easy Ackermann adjustments
- Aluminum rear ballstud mount for added strength
- 7.0mm aluminum rear clamping hex with laser etching
- Heavy-duty ball cups and ball studs allow for maximum suspension travel while reducing binding and friction
- Durable molded front and rear bumpers
- Easy access to ball differential
- Differential height adjustment with included 0, 1, 2, & 3mm inserts
- New slipper assembly for better weight balance and shock clearance
- Lay Back Stealth ® transmission (3 gear) included for lower and more rearward CG
- Heavy-duty routed graphite shock towers
- Heavy-duty rear axle with 91mm CVA bones
- Lightweight, hard-anodized aluminum chassis with centralized mass for improved handling on all track types
- V2 12mm “Big Bore” threaded aluminum shocks with 3mm shafts and x-rings for improved smoothness
- Innovative rear arm with molded inserts for ultra-fine lower shock mounting adjustments
- Machined pistons included for better fit and smoother operation
- Rear hubs feature large bearings and the easy-insert system to adjust camber link position and rear axle height
- One piece shock bushing to make assembly easier
- Aluminum C and D arm mount included for large range of anti-squat and toe adjustments
- Lightweight aluminum top shaft
- Factory Team upgraded ball bearing kit included (now oiled instead of greased for less drag)

:: Additional

Your new SC6.1 Team Kit comes unassembled and requires the following items for completion (refer to catalog section for suggestions):

- R/C two channel surface frequency radio system
- AA-size batteries for transmitter (#302 alkaline)
- Electronic Speed Control, ESC (#27002, 27003, 27004, 27005)
- Steering servo (#27100, 27101, 27106, #27107, 27108, 27109)
- R/C electric motor
- Pinion gear (48P), size determined by type/wind of motor
- Battery charger (a peak detection charger, or LiPo compatible charger)
- 2 cell LiPo battery pack (#27318, 27322, 27323, 27324)
- Polycarbonate specific spray paint
- Cyanoacrylate glue (CA)(#1597)
- Thread locking compound (#1596)
- Tires and Inserts, Fronts and Rears
- Wheels w/12mm Hex
  Front Wheels#9690, #9691, #91572, #91573
  Rear Wheels #9695, #9696, #91570, #91571

Tools included:

- Allen wrenches 1.5mm, 2.0mm
- #1113 12mm Shock Tool
- Multi-wrench

:: Other Helpful Items

- Silicone Shock Fluid (Refer to catalog for complete listings)
- Body Scissors (AE Part # 1737)
- FT Hex/Nut Wrenches (AE Part # 1519)
- Soldering Iron
- FT Dual Turnbuckle Wrench (#1114)
- Reamer / Hole Punch
- Needle Nose Pliers
- Calipers or a Precision Ruler
- FT Universal Tire Balancer (#1498)
- Shock Pliers (#1675)
- FT Ballcup Wrench (#1579)
- Green Slime shock lube (AE Part # 1105)
- Wire Cutters
- Hobby Knife

Associated Electrics, Inc.
26021 Commercentre Dr.
Lake Forest, CA 92630

Customer Service
Tel: 949.544.7500
Fax: 949.544.7501

http://www.RC10.com · http://twitter.com/Team_Associated · http://www.instagram.com/teamassociatedrc/ · http://www.facebook.com/TeamAssociated/

:: Hardware - 1:1 Scale View

Button Head (bhcs)

2x4mm (31510)
Aluminum (8545)

2.5x6mm (31520)

2.5x8mm (31521)

2.5x10mm (31522)

3x4mm (91158)

3x5mm (31530)

3x6mm (31531)
Aluminum (8550)
Titanium (91580)

3x8mm (31532)
Aluminum (8552)
Titanium (91581)

3x10mm (25211)
Aluminum (8554)
Titanium (91582)

3x12mm (89202)
Titanium (91583)

3x14mm (25187)
Titanium (91584)

3x16mm (89203)
Titanium (91585)

3x18mm (2308)

3x20mm (25188)
Titanium (91587)

3x22mm (25189)
Titanium (91588)

3x24mm (89204)
Titanium (91589)

3x30mm (91478)

Cap Head (shcs)

1.6 x 5mm (91611)

Flat Head (fhcs)

2x3mm (91743)

3x8mm (25201)
Aluminum (8553)
Titanium (91592)

3x10mm (25202)
Aluminum (8555)
Titanium (91593)

3x12mm (25203)
Aluminum (8556)
Titanium (91594)

3x14mm (89208)
Aluminum (8567)
Titanium (91595)

3x16mm (25204)
Titanium (91596)

3x18mm (89209)
Titanium (91597)

Set Screws

3x2.5mm (31500)

3x3mm (25225)

3x10mm (4671)

Shims and Washers

5.5x0.5mm (31381)

5.5x1.0mm (31382)

5.5x2.0mm (31383)

3x8mm Washer (89218)

Diff Balls

5/64 Diff Thrust Balls (6574)

3/32 Carbide Diff Balls (6581)
3/32 Ceramic Diff Balls (6584)

Ball Bearings

3x7x3mm (91475)

5x8x2.5mm (31400)

5x10x4mm (91560)

6x13x5 (91562)

10x15x4 (91563)

Ballstuds

Silver 5mm long (31283)
Ti Nitride 5mm long (31291)

Silver 8mm long (31284)
Ti Nitride 8mm long (31292)

HD 6mm (91047)
Ti Nitride HD 6mm (91118)
Ti HD 6mm (91751)

HD 8mm (91048)
Ti Nitride HD 8mm (91119)
Ti HD 8mm (91752)

HD 10mm (91049)
Ti Nitride HD 10mm (91120)
Ti HD 10mm (91753)

Nuts (lock/plain)

M3 Nut (91477)
M3 Alum. Locknut, Blue (31550)
M3 Locknut, Black (25215

M3 Locknut w/Flange (25612)
FT 3mm Locknuts, Blue(25392)

M4 Locknuts:
Serrated Steel (Silver)(91826)
Flanged (Black) (91148)
FT Aluminum (Blue) (31551)
Serrated Aluminum (Black) (91738)

Notes:

:: Table of Contents

:: Notes

This symbol indicates a special note or instruction in the manual.

This symbol indicates a Racers Tip.

There is a 1:1 hardware foldout page in the front of the manual. To check the size of a part, line up your hardware with the correct drawing until you find the exact size. Each part in the foldout has a number assigned to it for ordering replacement parts.

Associated Electrics, Inc.
26021 Commercentre Dr.
Lake Forest, CA 92630

Customer Service
Tel: 949.544.7500
Fax: 949.544.7501

http://www.RC10.com • http://twitter.com/Team_Associated • http://www.instagram.com/teamassociatedrc/ • http://www.facebook.com/TeamAssociated/

:: Bag 1 - Step 1

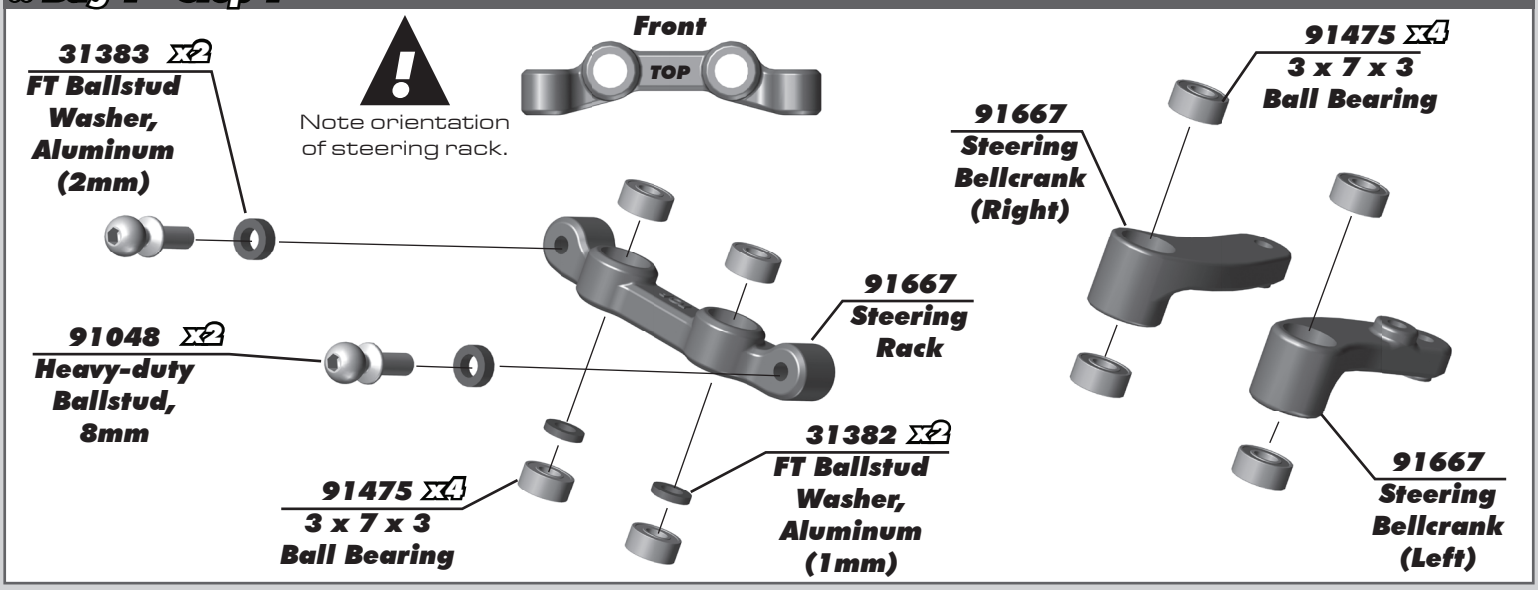

:: Bag 1 - Step 2

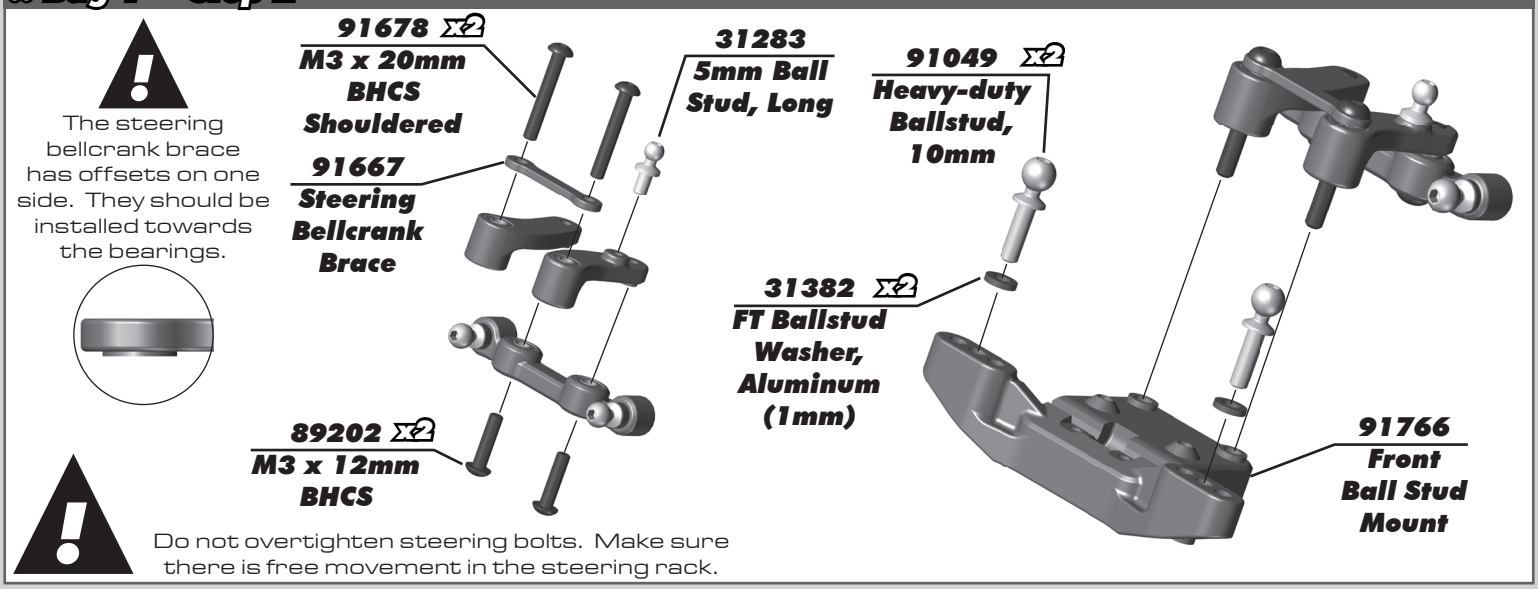

:: Bag 2 - Step 1

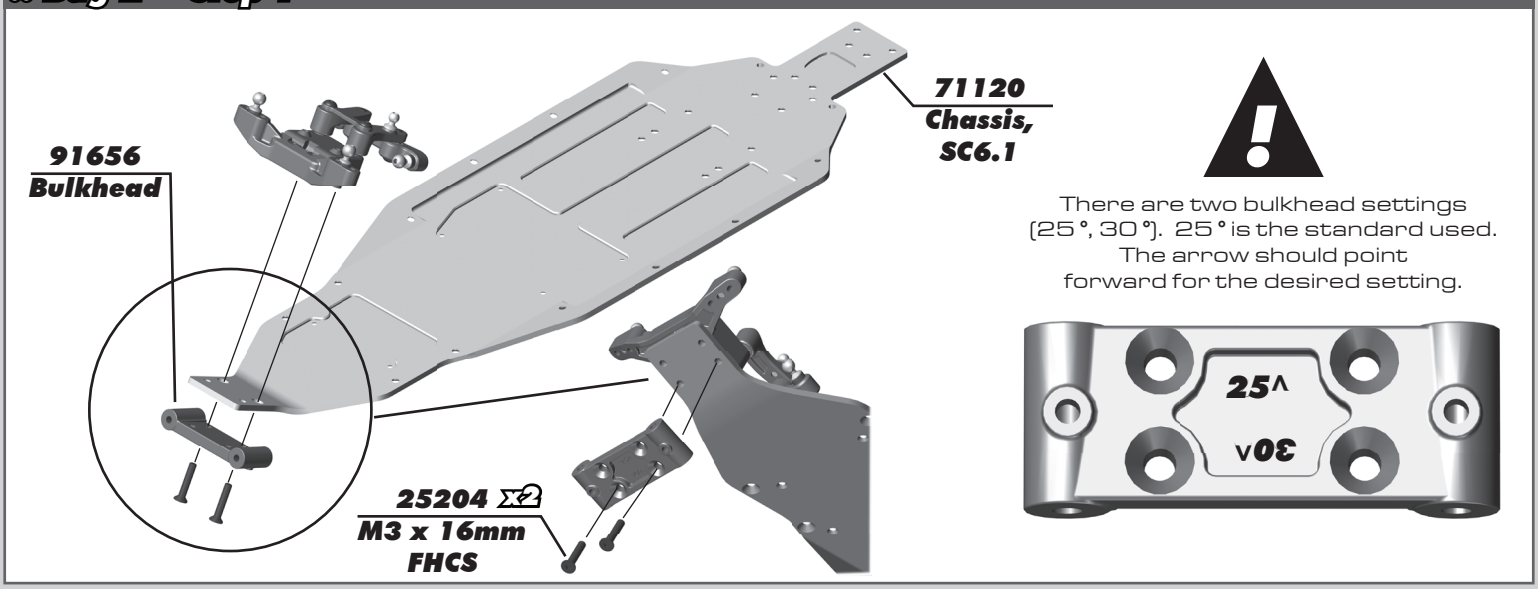

:: Bag 2 - Step 2

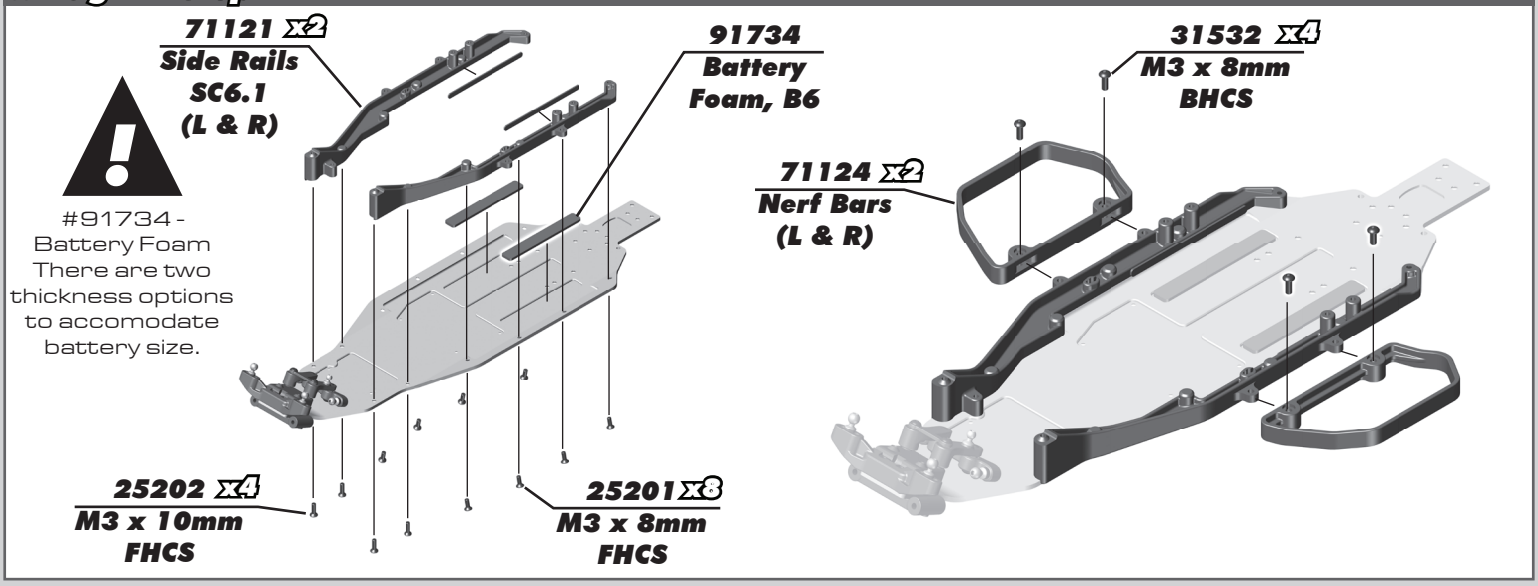

:: Bag 2 - Step 3

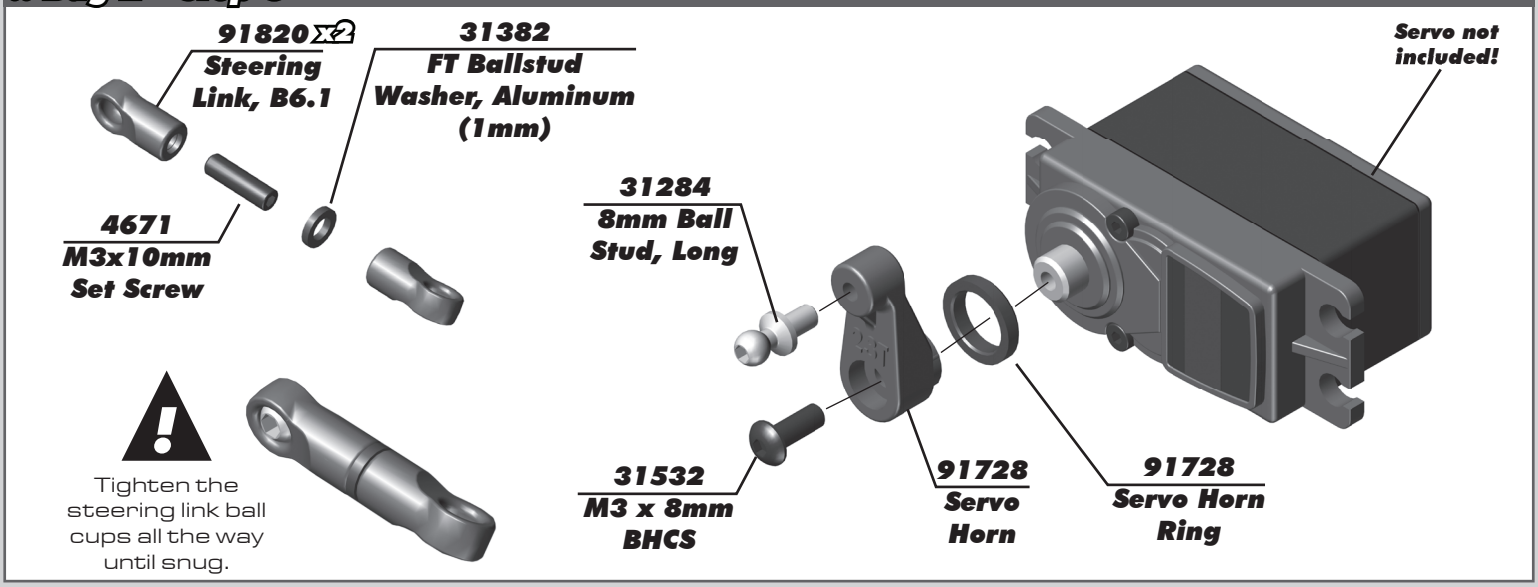

:: Bag 2 - Step 4

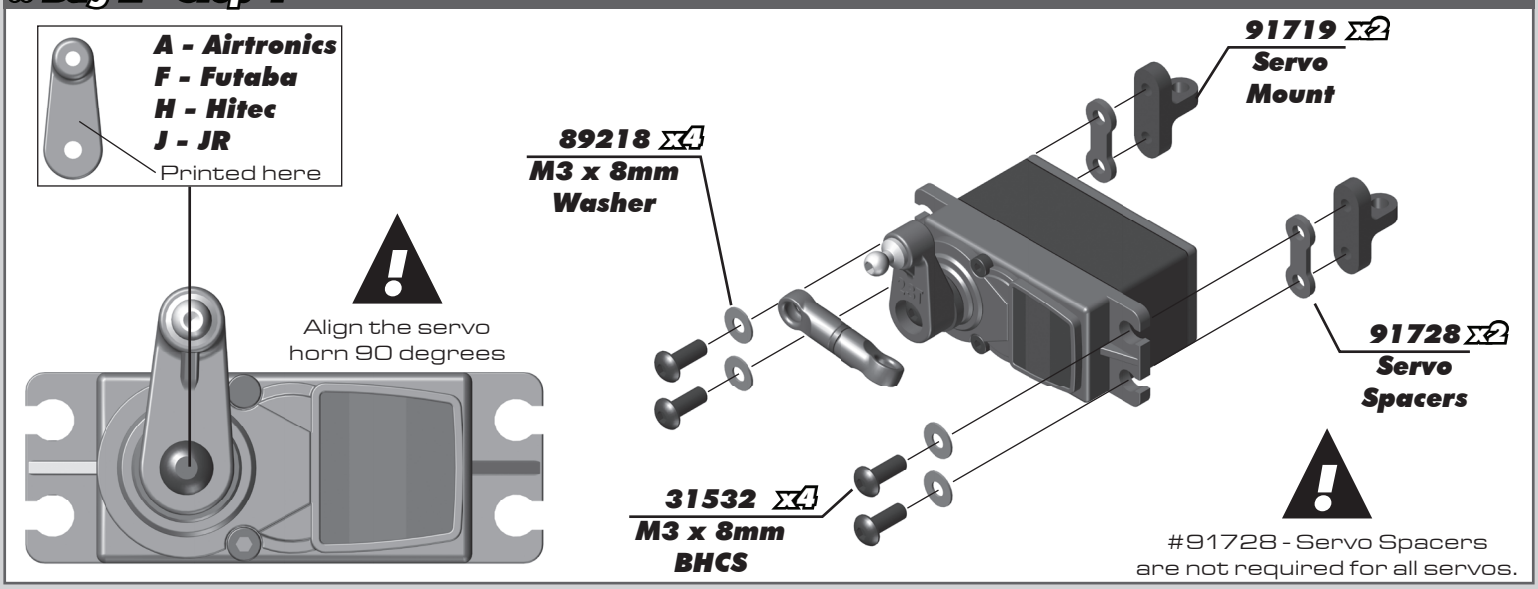

:: Bag 2 - Step 5

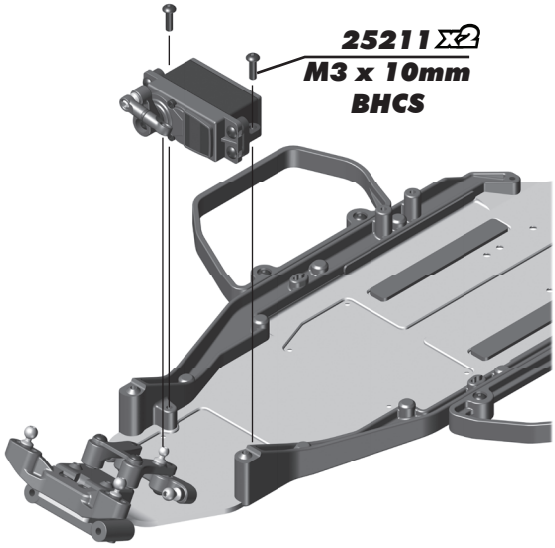

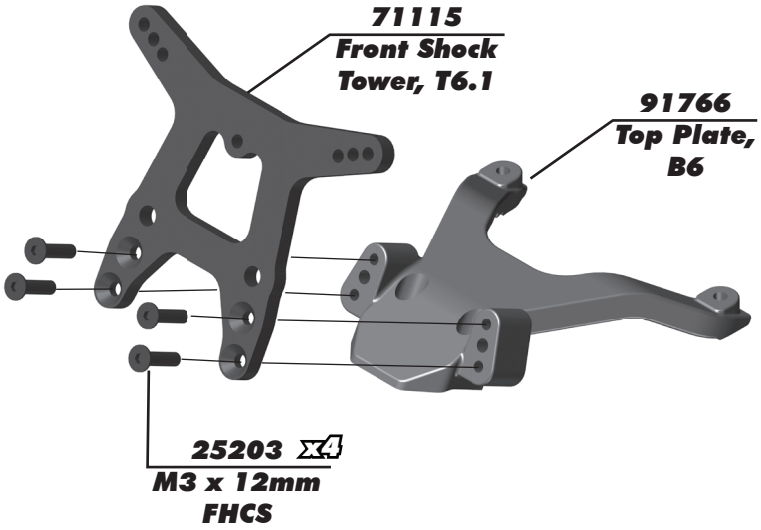

:: Bag 2 - Step 6

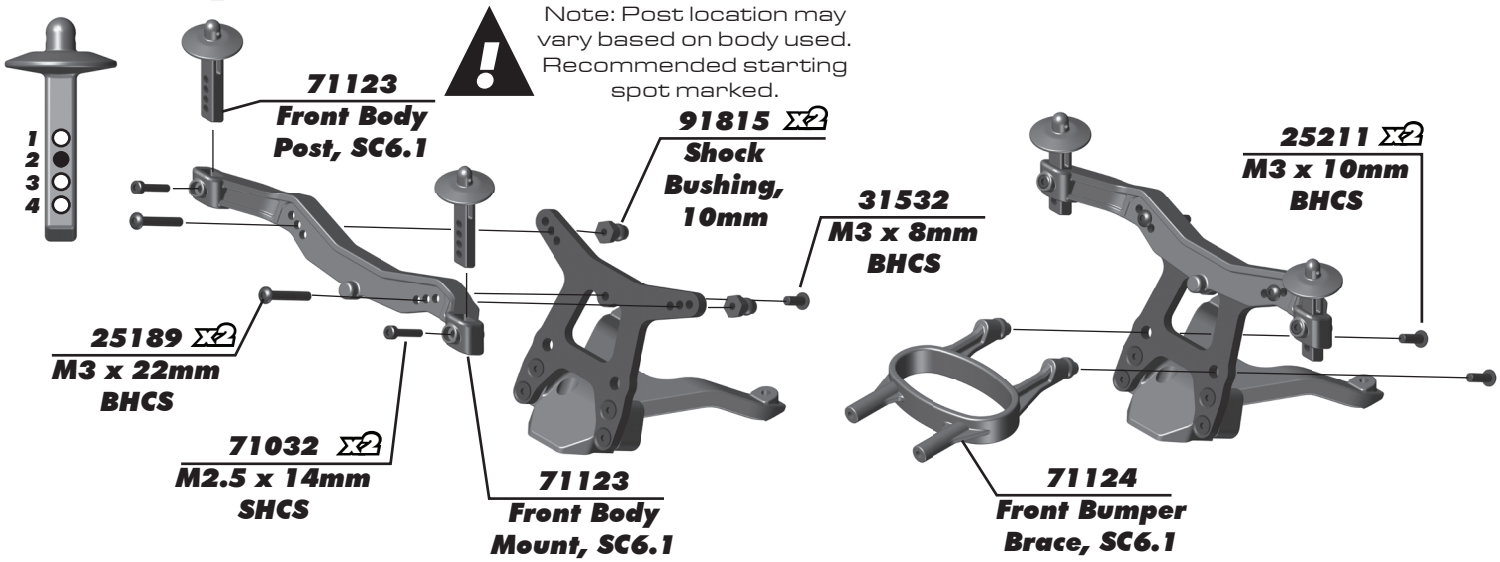

:: Bag 2 - Step 7

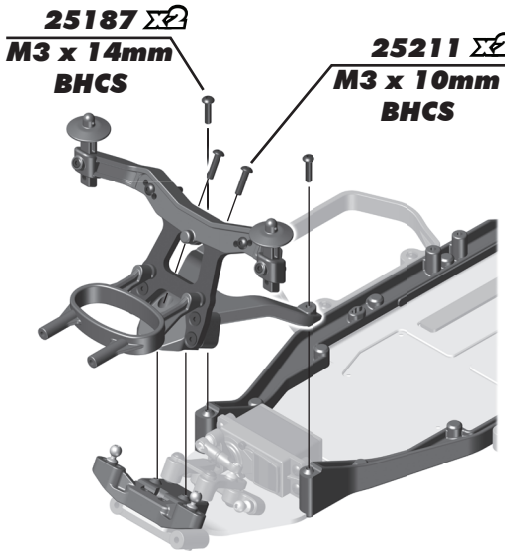

The front hinge pin brace has a sharp edged side, and a rounded edge side. Mount the sharp edge side towards the bulkhead.

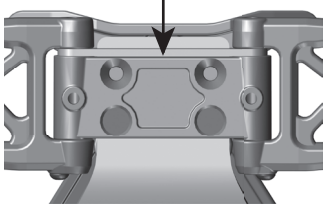

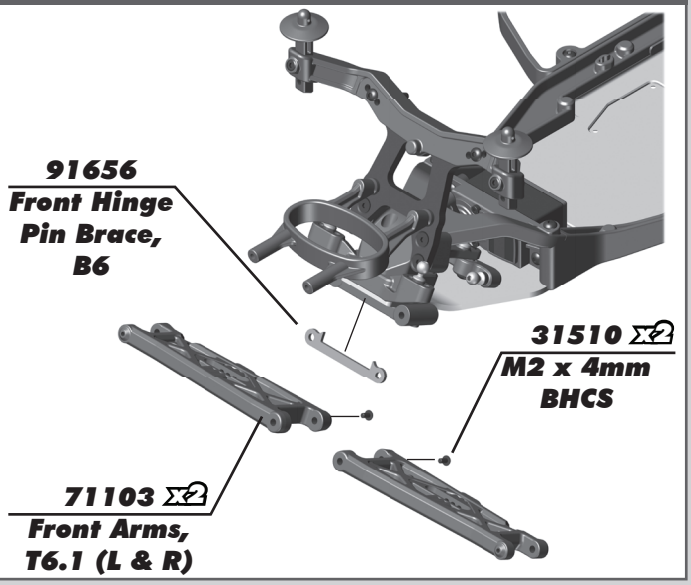

:: Bag 2 - Step 8

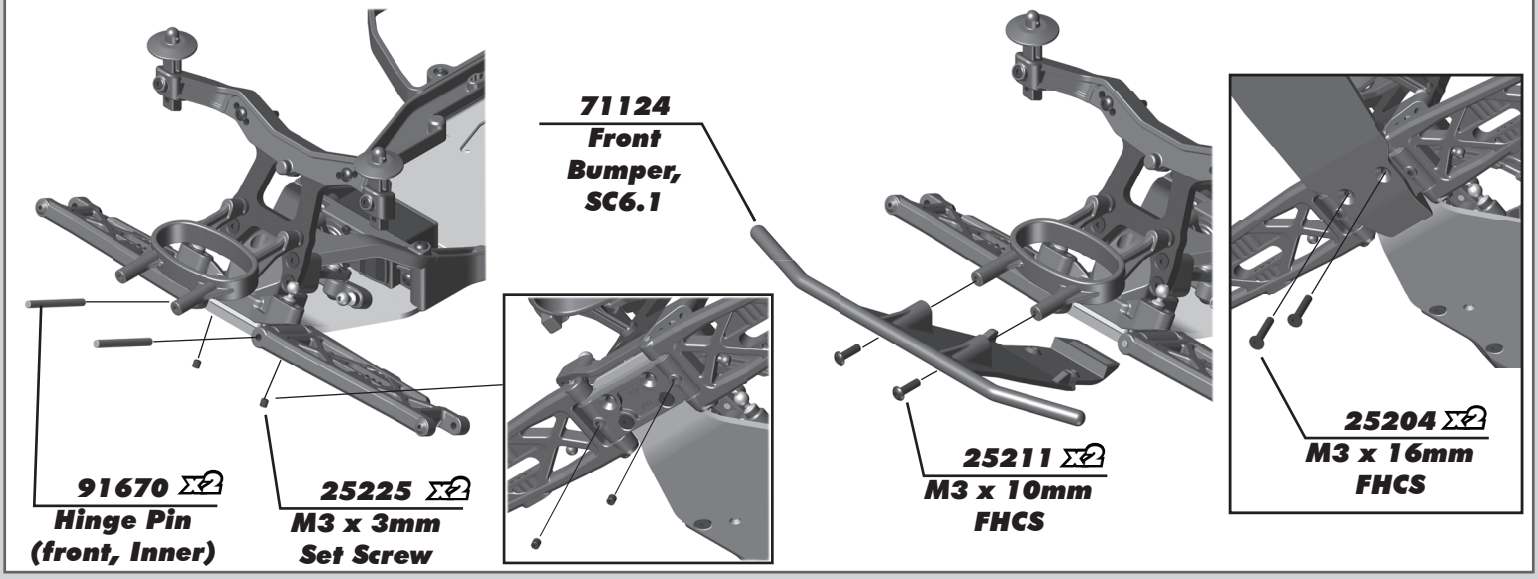

:: Bag 3 - Step 1

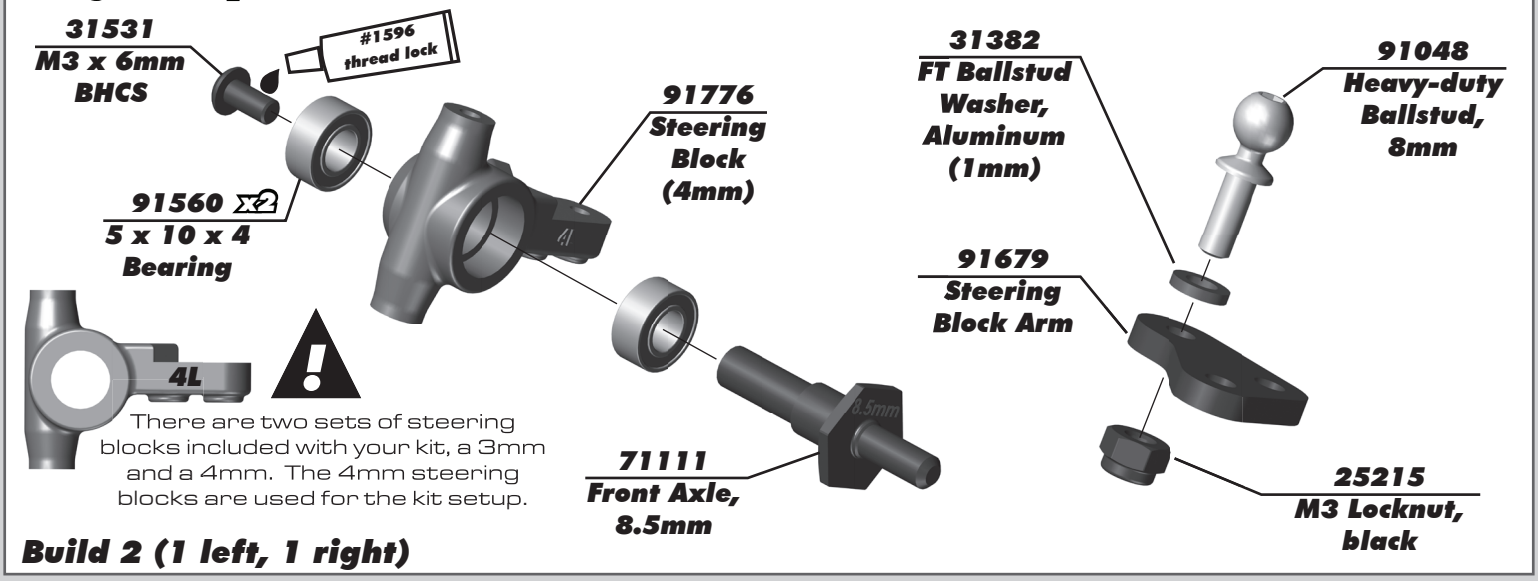

Build 2 (1 left, 1 right)

:: Bag 3 - Step 2

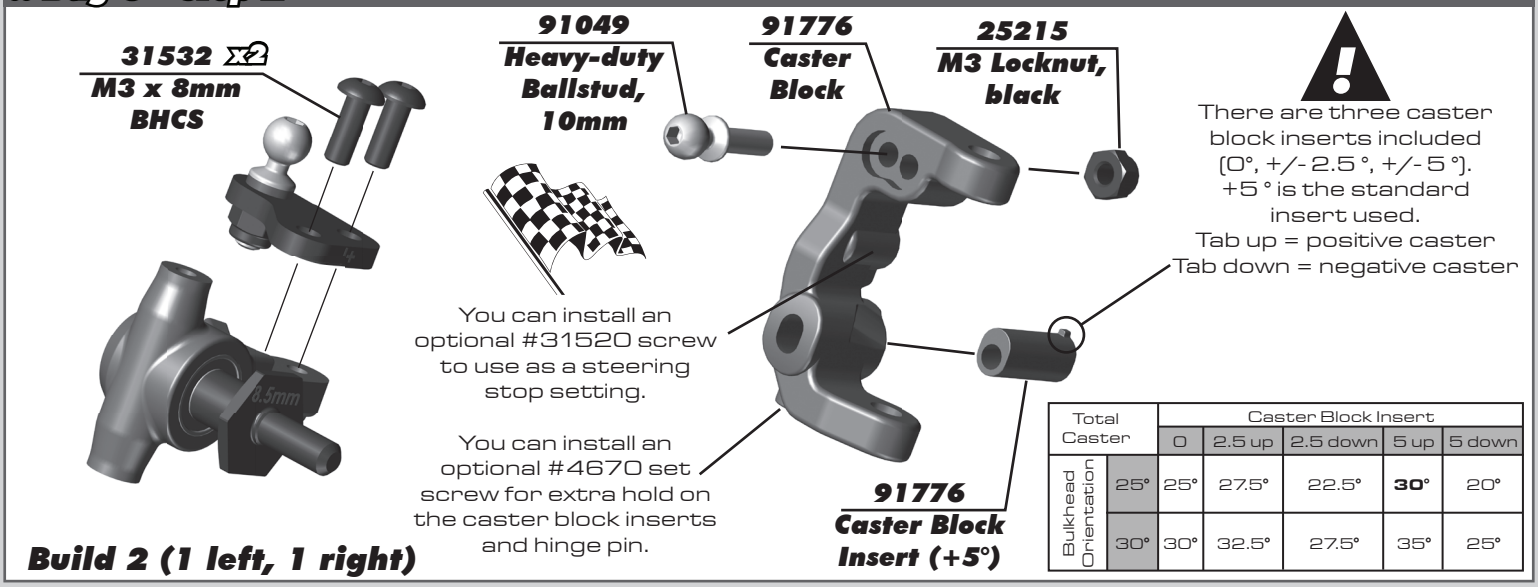

Total Caster		Caster Block Insert				
		0	2.5 up	2.5 down	5 up	5 down
Bulkhead Orientation	25°	25°	27.5°	22.5°	**30°**	20°
	30°	30°	32.5°	27.5°	35°	25°

Build 2 (1 left, 1 right)

:: Bag 3 - Step 3

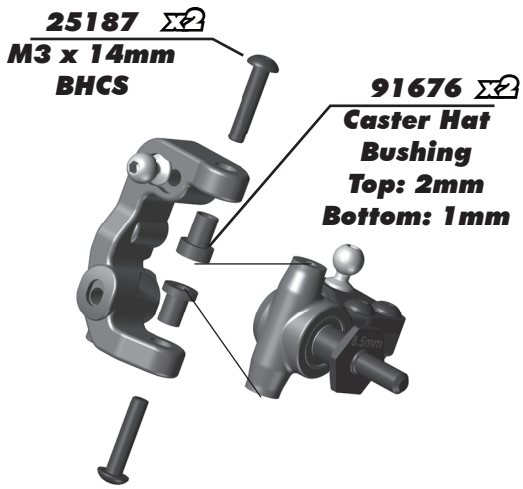

Build 2 (1 left, 1 right)

#91670 - Hinge Pin will be tight in the caster blocks, but should rotate freely in the front arms.

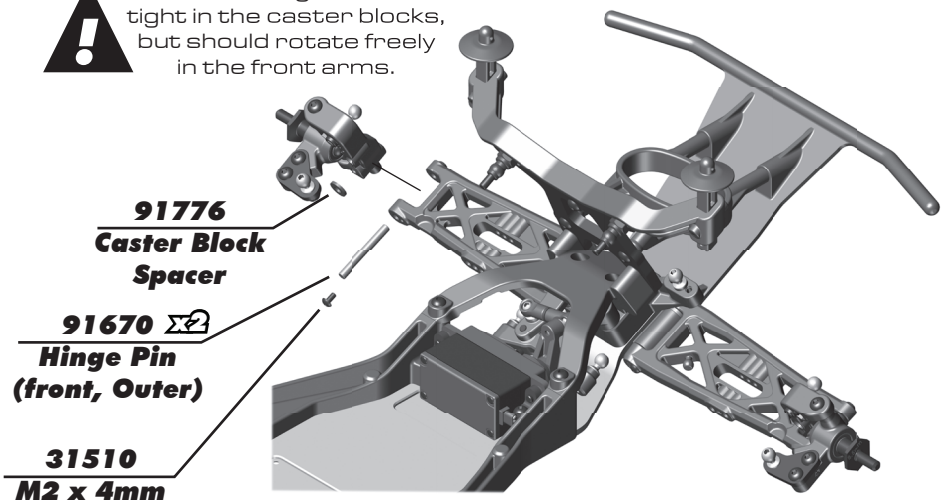

Build 2 (1 left, 1 right)

:: Bag 4 - Step 1

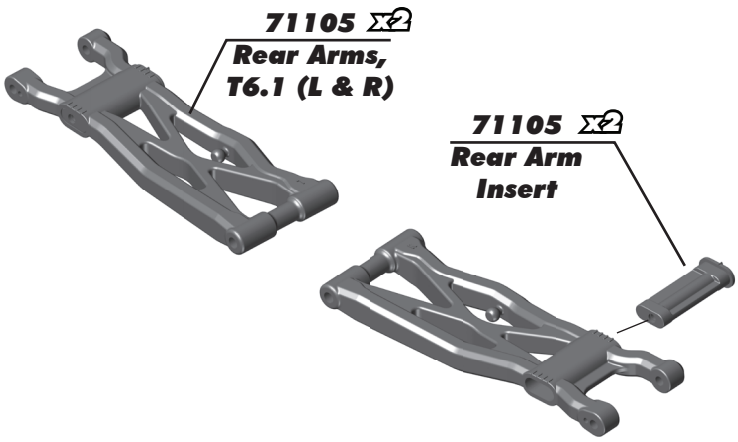

Install the rear arm insert in the same position for the left and right side arms!

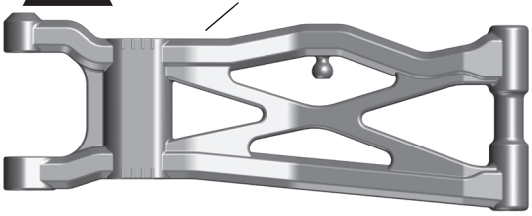

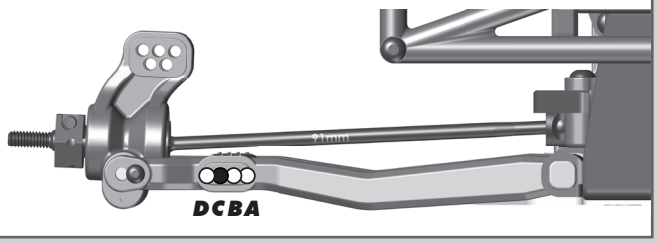

:: Bag 4 - Step 2

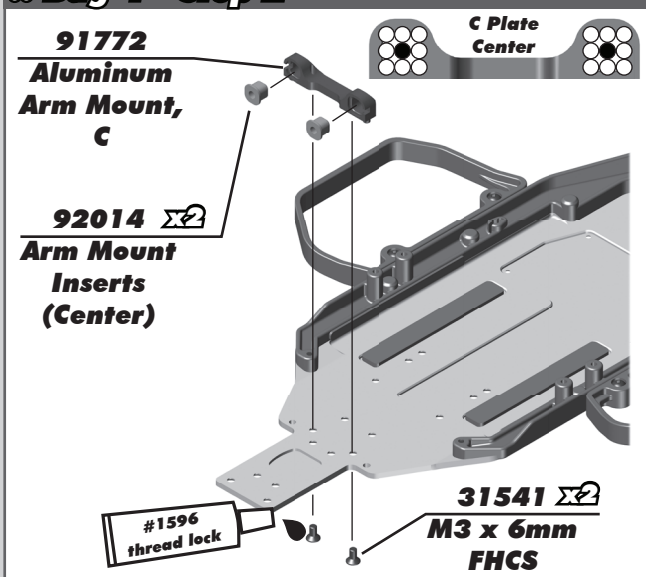

See page 20 for pill insert setup tips!

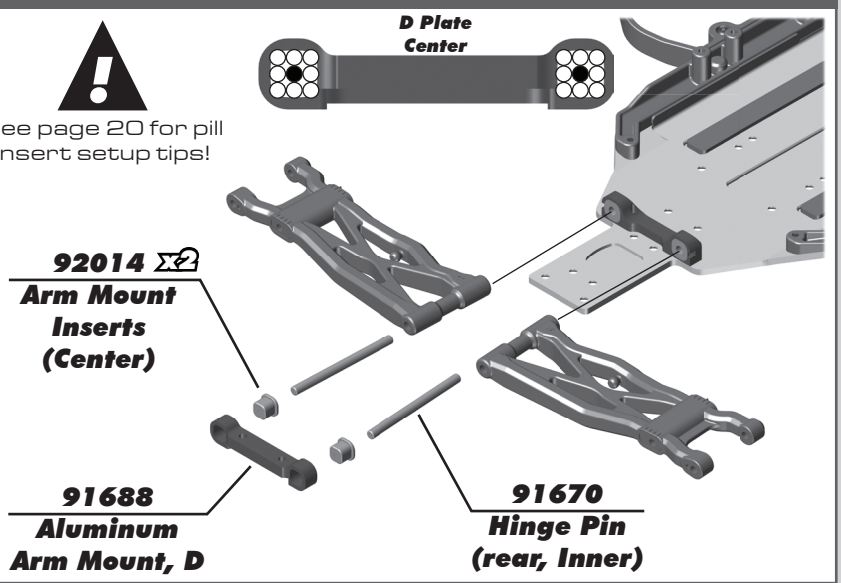

:: Bag 5 - Step 1

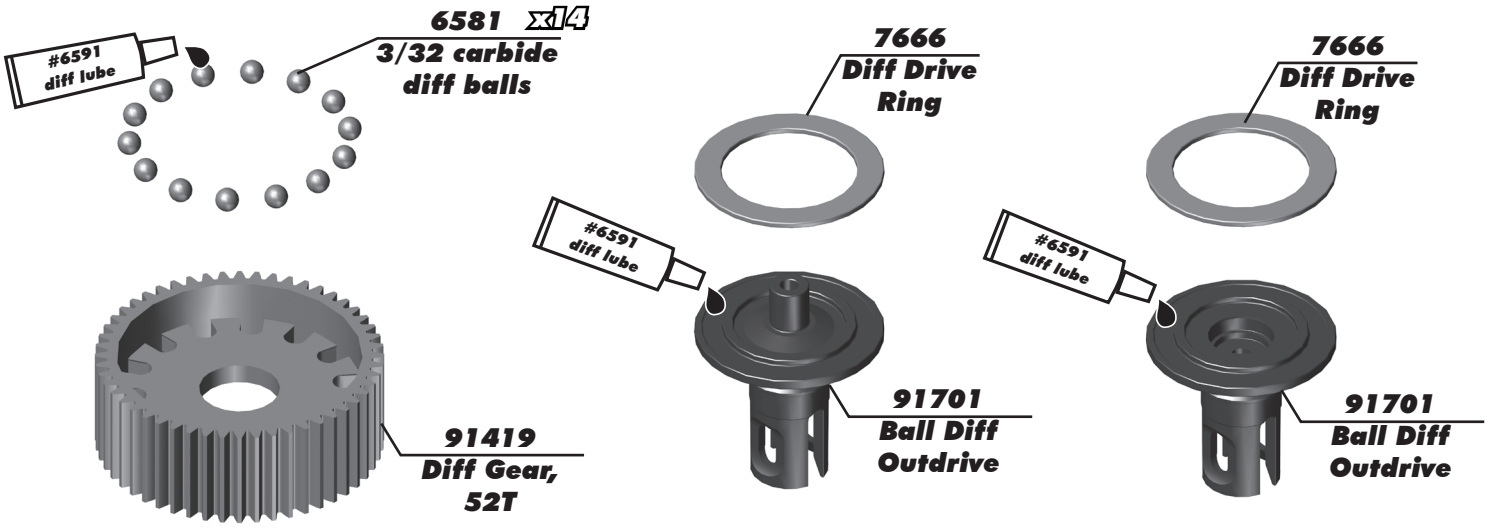

:: Bag 5 - Step 2

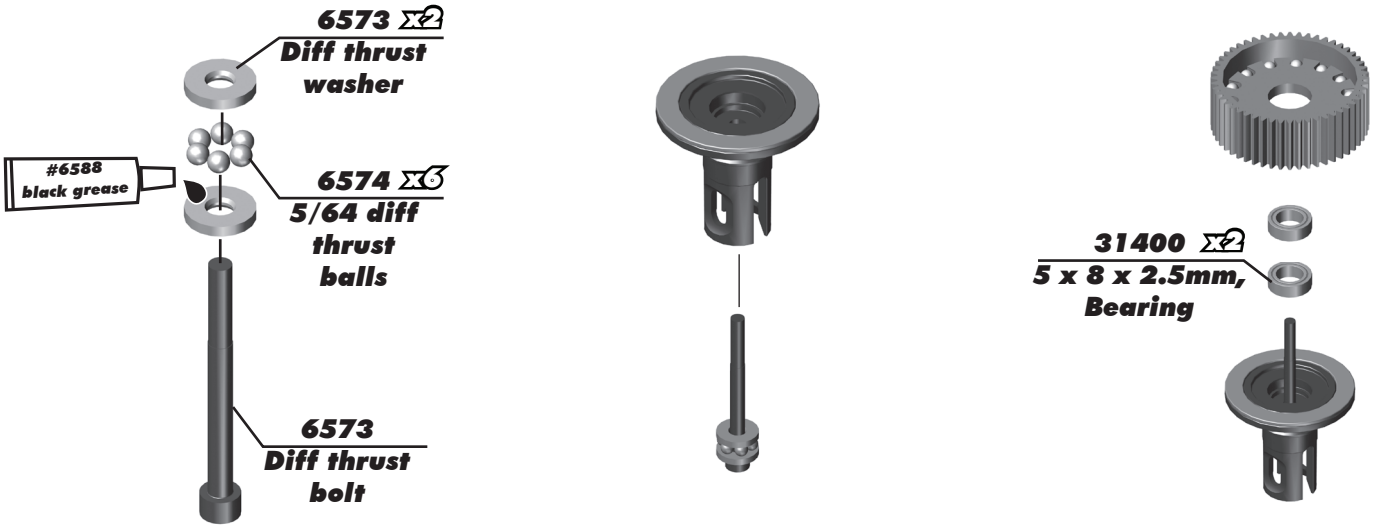

:: Bag 5 - Step 3

Compress spring first.

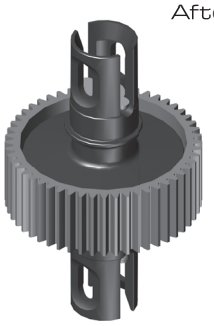

As you tighten the diff bolt, you will notice the T-nut ears moving closer to the bottom of the outdrive slot. This compresses the spring behind the T-nut. The spring should be completely compressed at the time the T-nut reaches the end of the slot. Caution! Pay close attention to the feeling when the spring is completely compressed. Do not overtighten the bolt. When you feel the spring completely compressed, loosen the diff bolt 1/8" of a turn. Your diff should now operate smoothly but with resistance as the outdrives move in opposite directions. After you have driven the car once, re-check the diff setting.

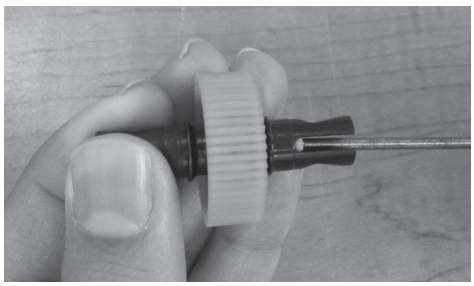

:: Bag 6 - Step 1

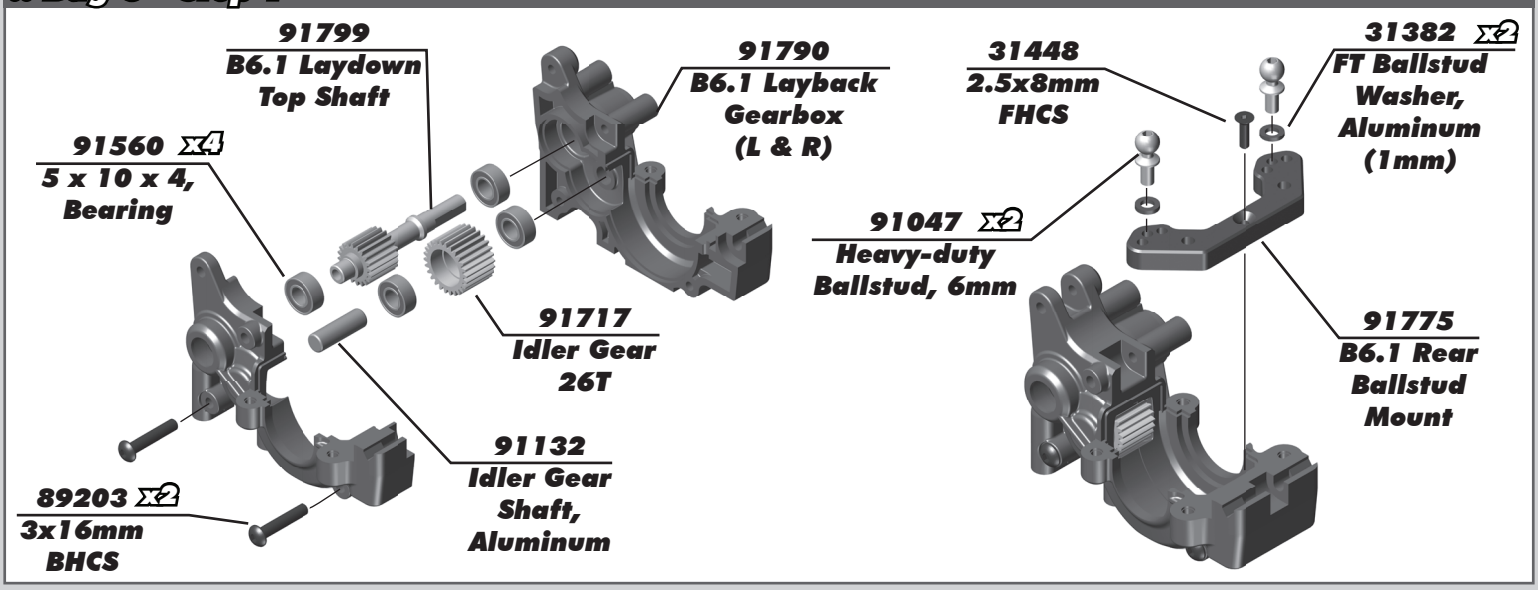

:: Bag 6 - Step 2

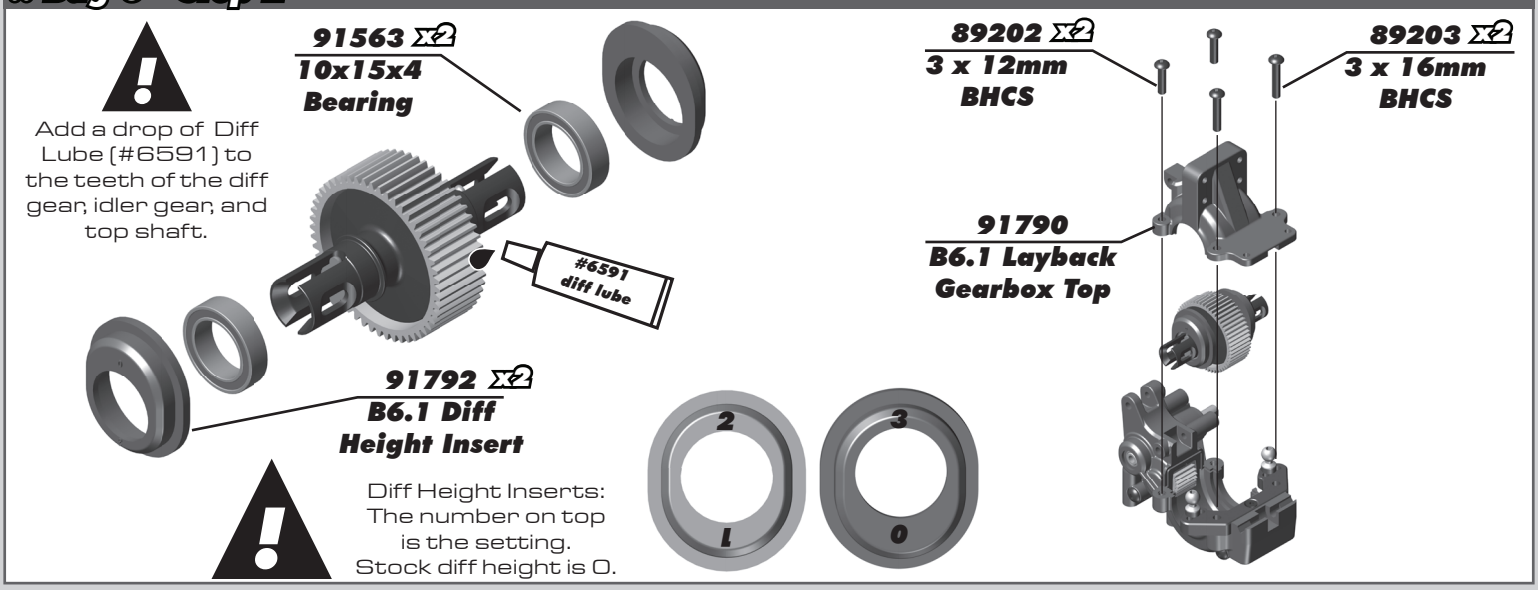

:: Bag 6 - Step 3

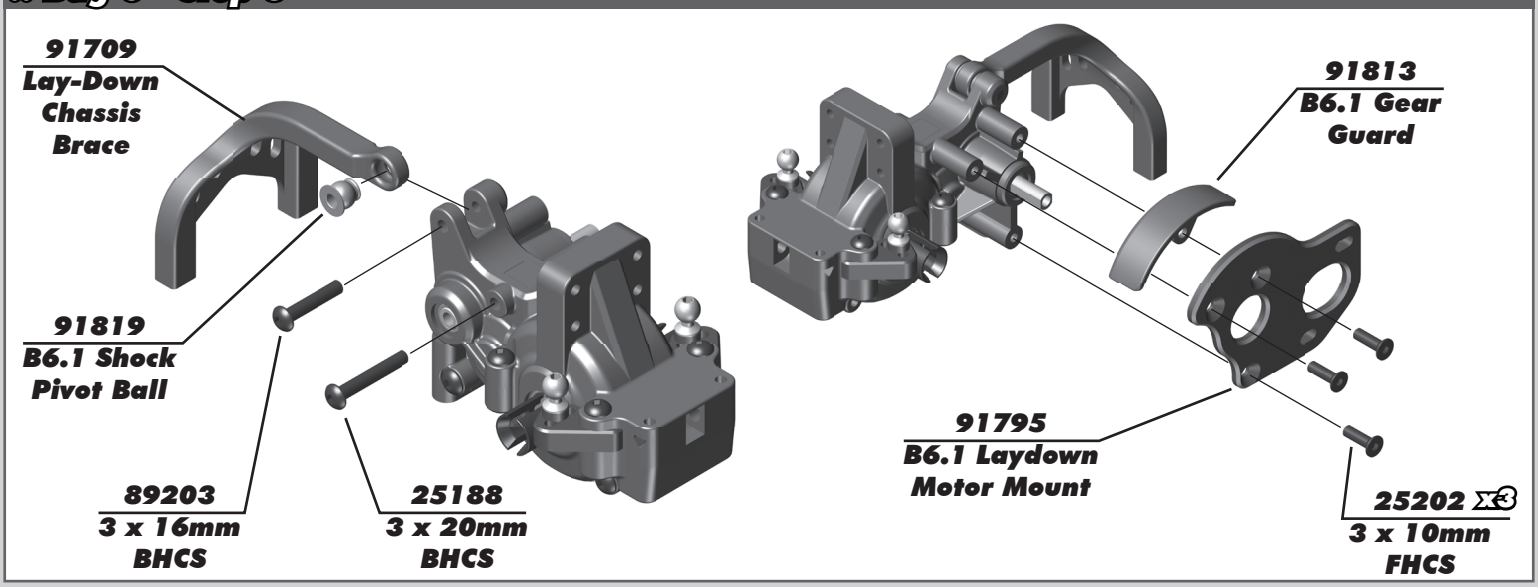

:: Bag 6 - Step 4

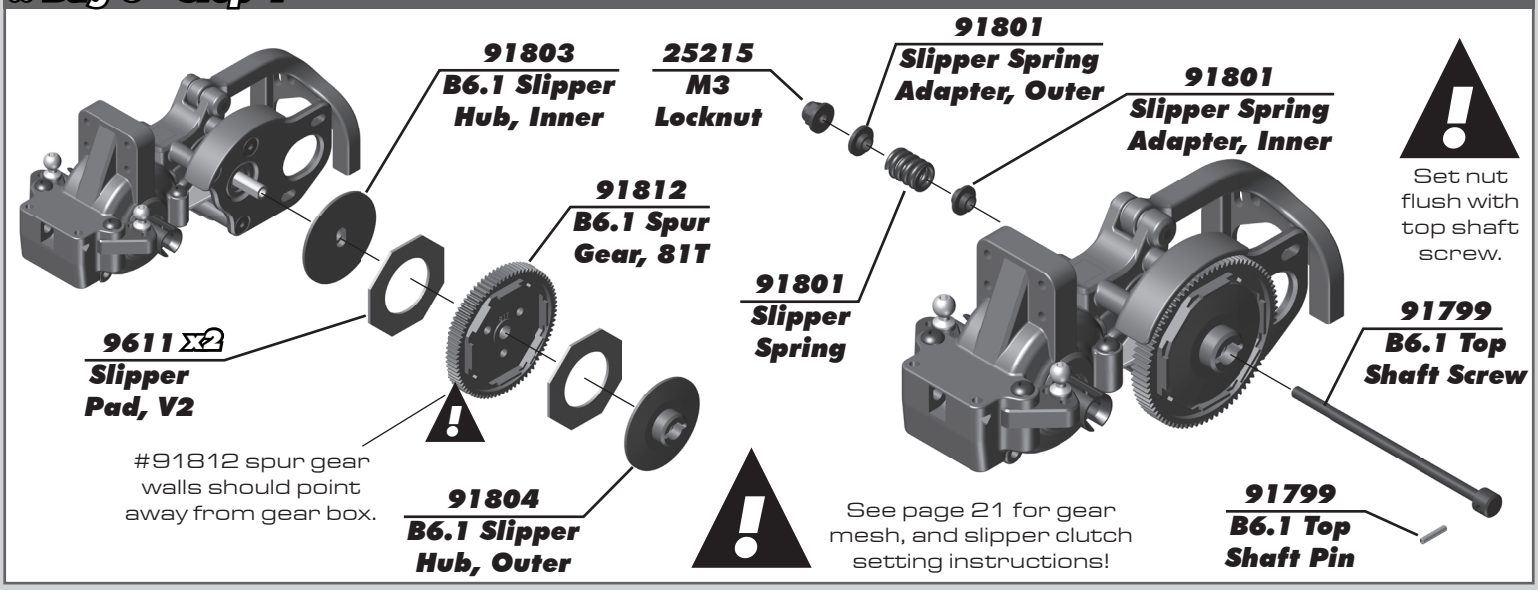

:: Bag 6 - Step 5

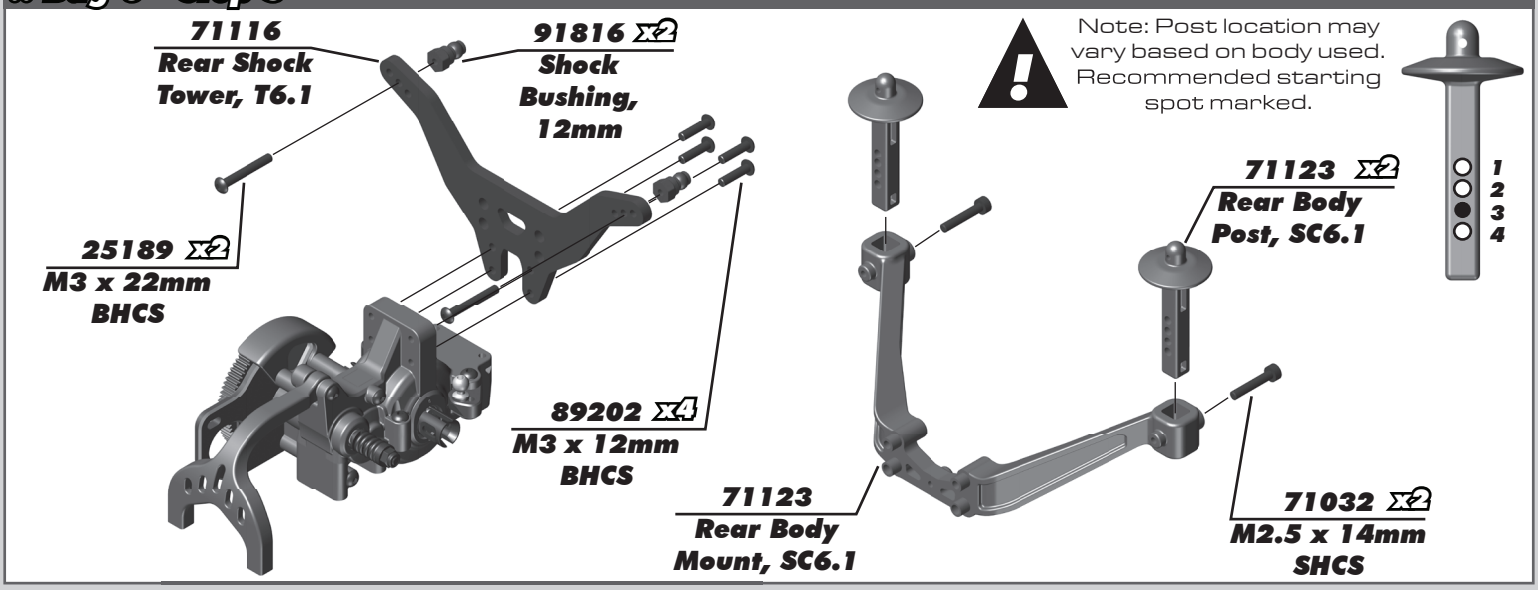

:: Bag 6 - Step 6

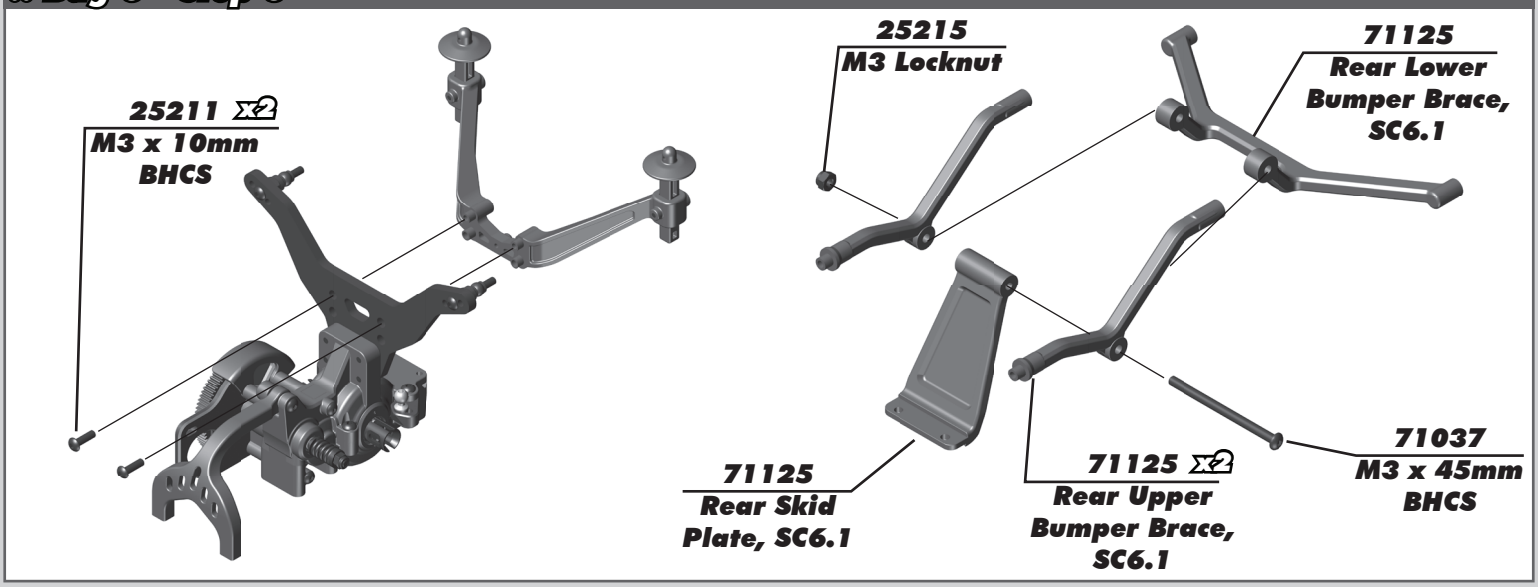

:: Bag 6 - Step 7

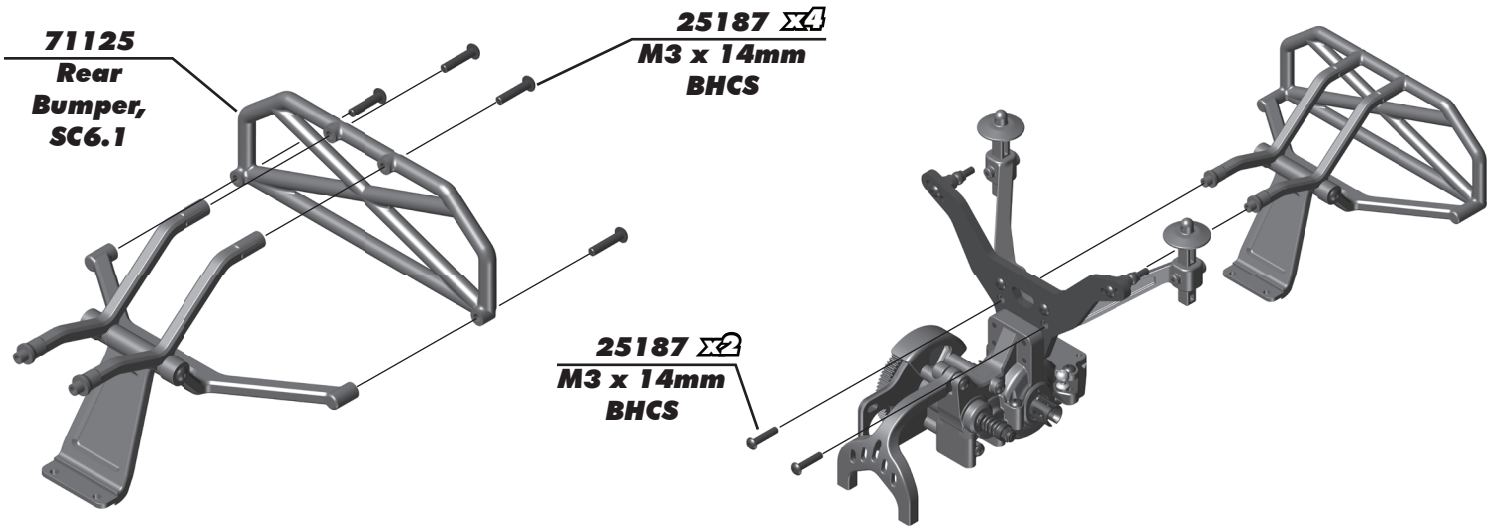

:: Bag 6 - Step 8

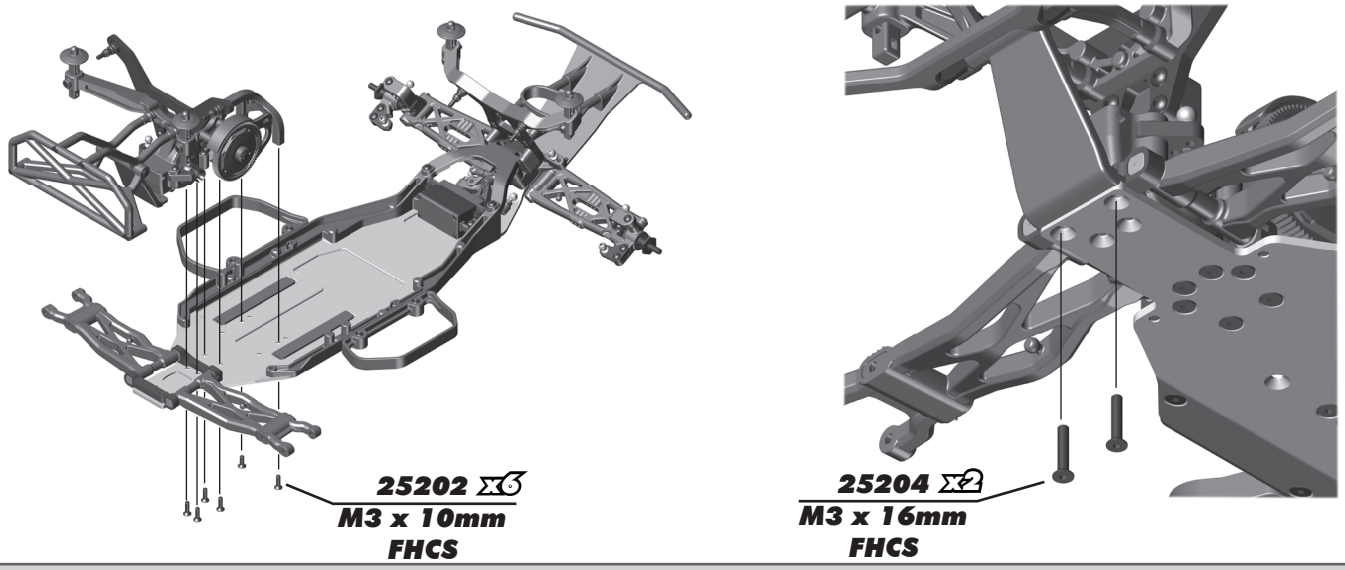

:: Bag 7 - Step 1

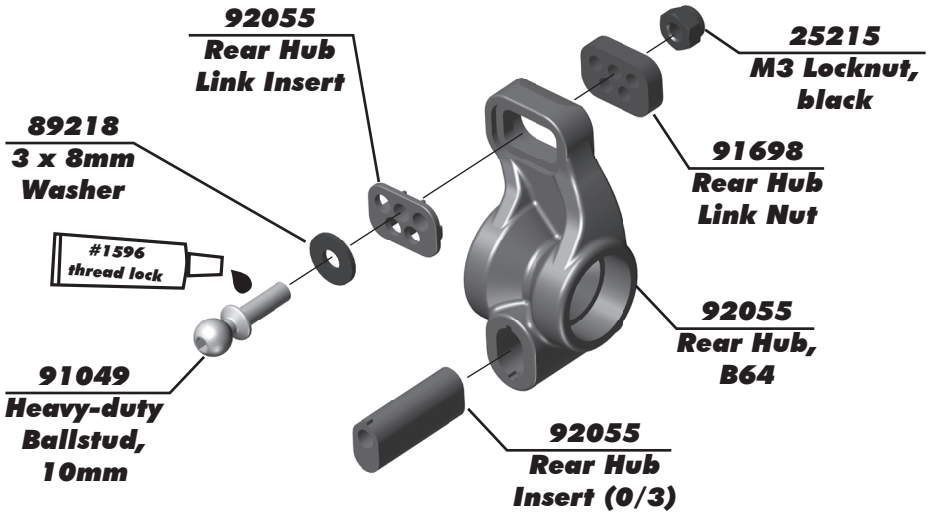

Rear Hub Link Setting (Right Side Shown):

Up

Down

Insert	0/3 up	0/3 down	1/2 up	1/2 down
Axle Height	0 (low)	+ 3mm	+ 1mm	+ 2mm
Recommended Ballstud location				

Build x2 (left and right side) **Kit Setup: Tab up (0mm)**

:: Bag 7 - Step 2

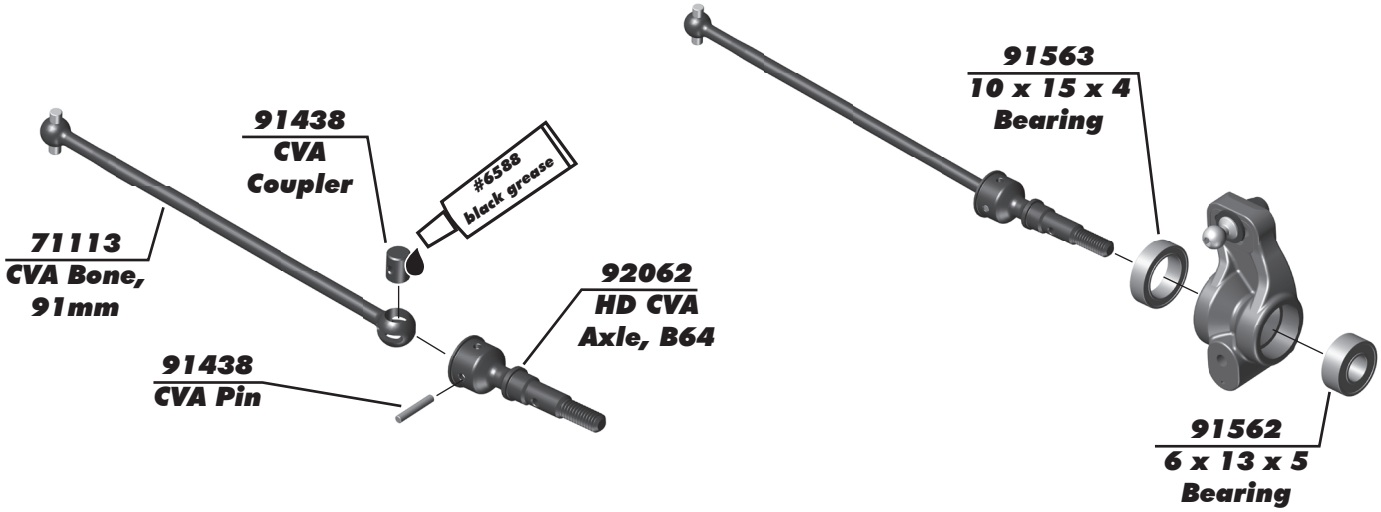

Build x2 (left and right side)

:: Bag 7 - Step 3

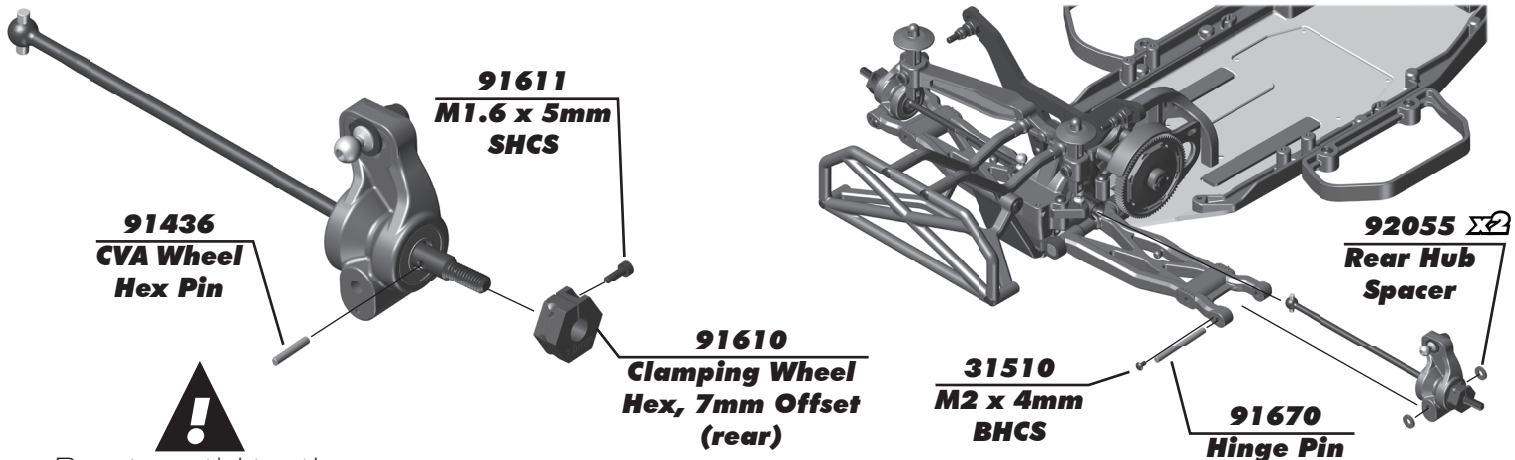

Do not overtighten the 1.6 x 5mm SHCS into the Clamping wheel hex.

Build x2 (left and right side)

#91670 - Hinge Pin will be tight in the rear hub, but should rotate freely in the rear arms.

Build x2 (left and right side)

:: Bag 8 - Step 1

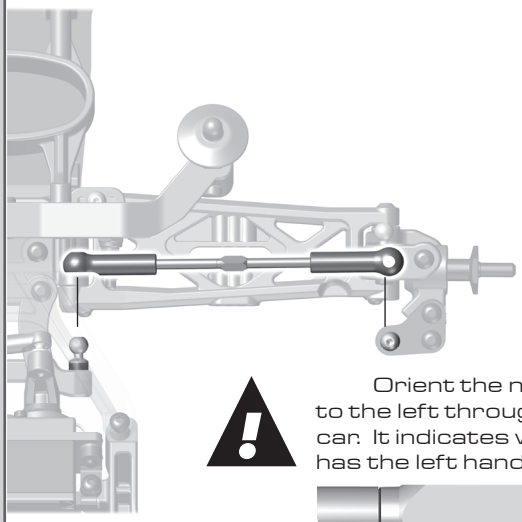

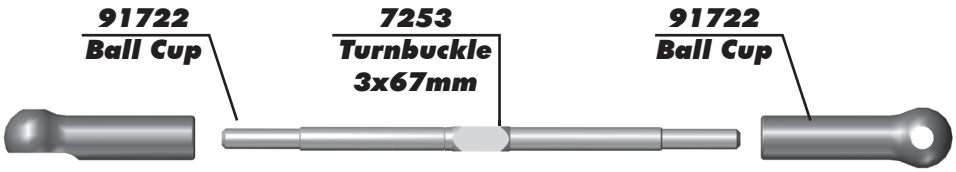

Orient the notch to the left throughout the car. It indicates which end has the left hand threads!

Racers Tip:

Use black grease (#6588) on the threads of the turnbuckles for easier ball cup installation!

Steering Turnbuckle
42.75mm

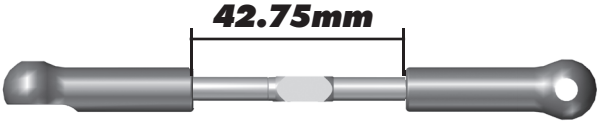

Build x2 (left and right side)

:: Bag 8 - Step 2

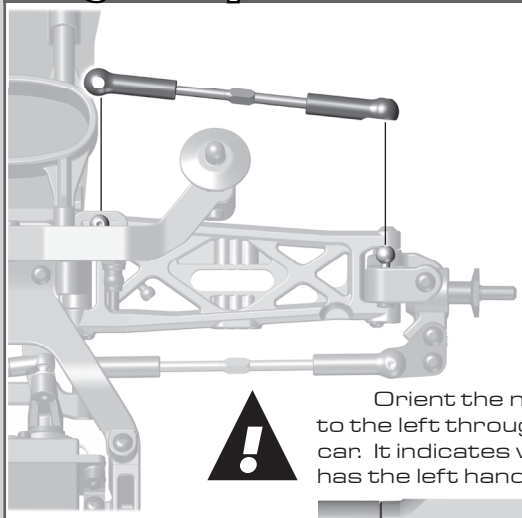

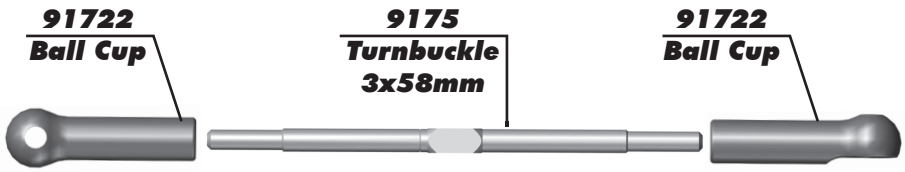

Orient the notch to the left throughout the car. It indicates which end has the left hand threads!

Racers Tip:

Use black grease (#6588) on the threads of the turnbuckles for easier ball cup installation!

Front Camber Turnbuckle
37.00mm

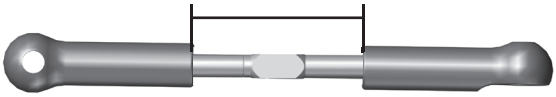

Build x2 (left and right side)

:: Bag 8 - Step 3

Orient the notch to the left throughout the car. It indicates which end has the left hand threads!

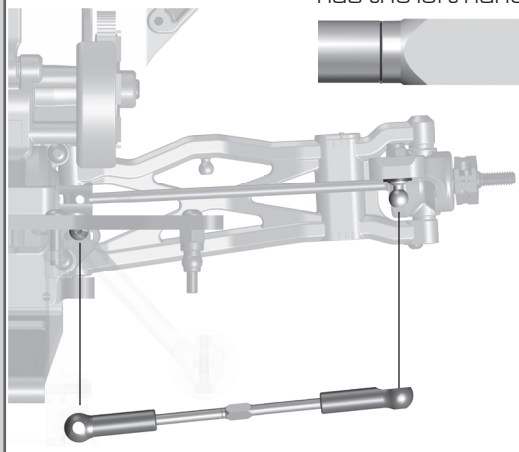

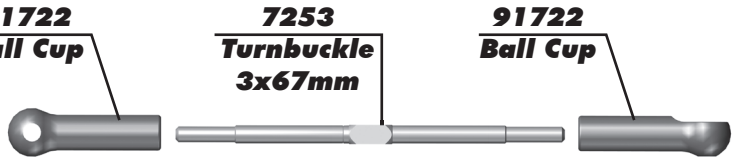

Racers Tip:

Use black grease (#6588) on the threads of the turnbuckles for easier ball cup installation!

Rear Camber Turnbuckle
47.00mm

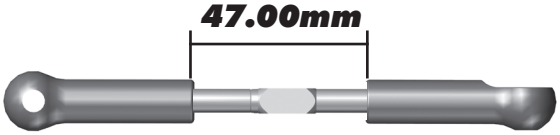

Build x2 (left and right side)

:: Bag 9 - Step 1

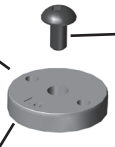

91626
FT 12mm V2 Shock Piston, 2x1.6 flat (front)

91627
FT 12mm V2 Shock Piston, 2x1.7 flat (rear)

31510
M2 x 4mm BHCS

89278
2.6x6mm Washer

91619
3 x 27.5mm Shock Shaft (V2) TiN, front

91623
3 x 35mm Shock Shaft (V2) TiN, rear

Mount the shock pistons with the number facing up!

Racers Tip:

Use a marker over the numbers on the pistons to make them easily visible!

4187
Nylon Spacer, (.030)

Front:
2 spacers

Rear:
1 spacers

:: Bag 9 - Step 2

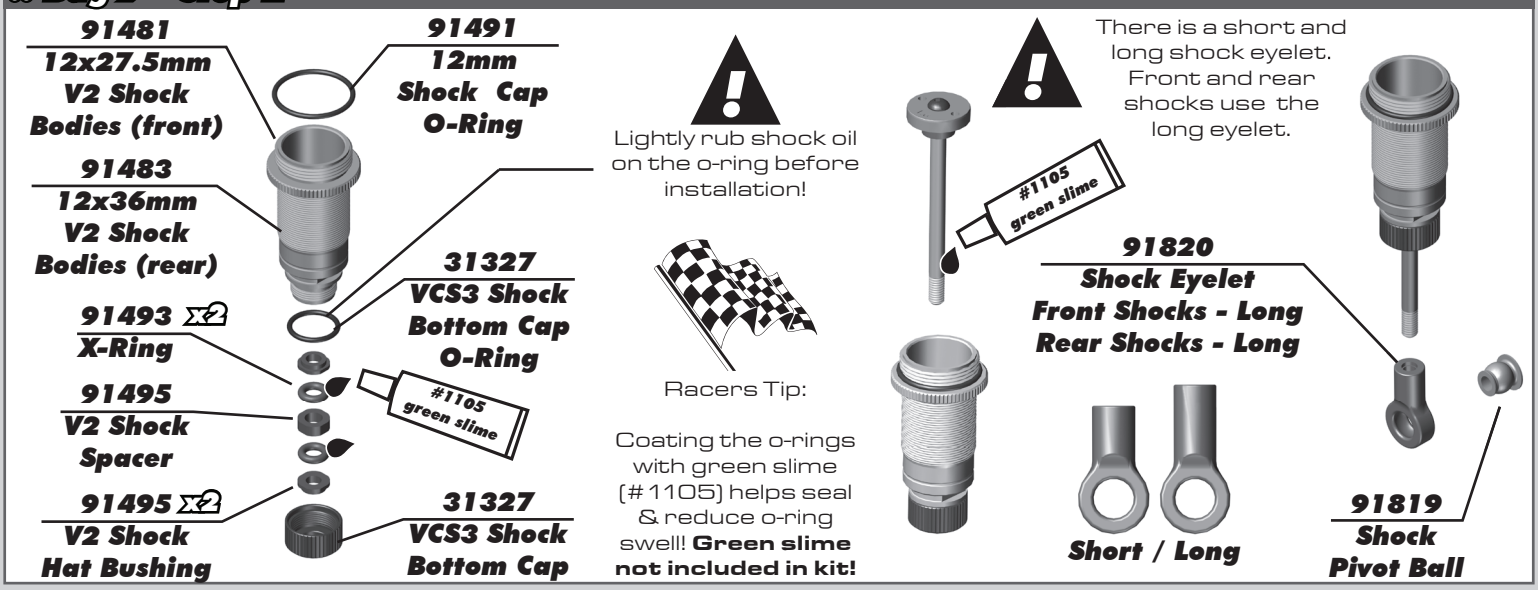

:: Bag 9 - Step 3

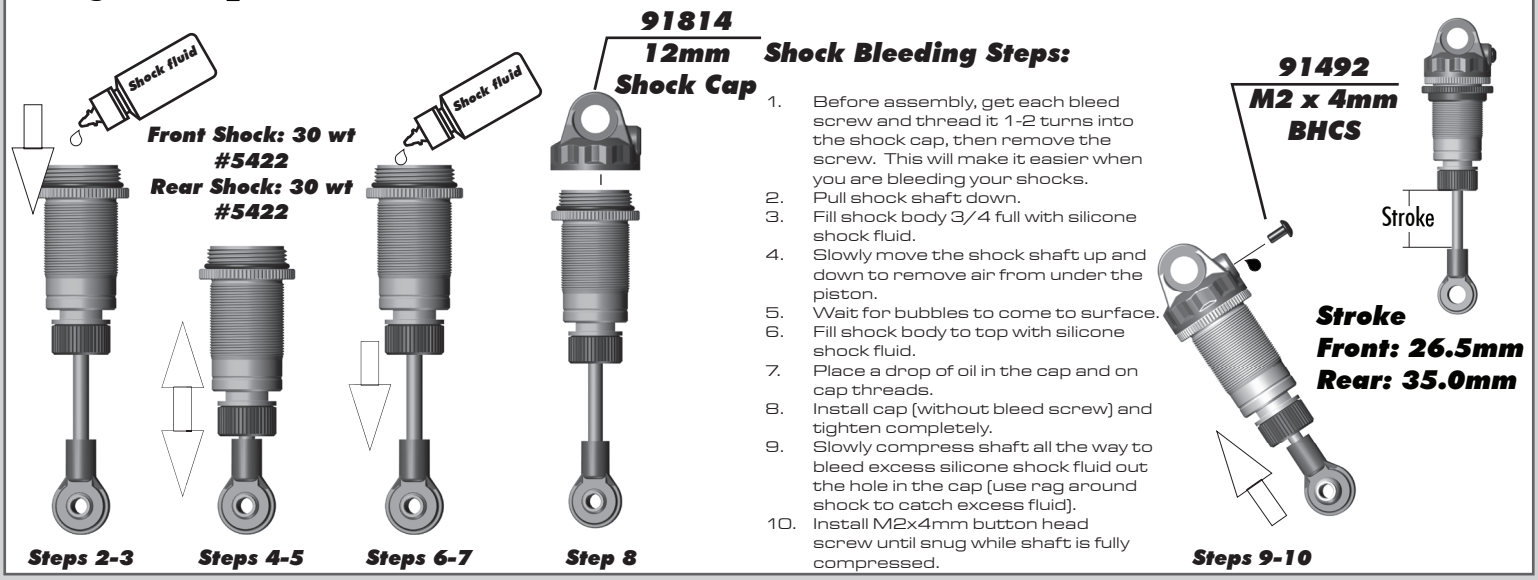

Shock Bleeding Steps:

1. Before assembly, get each bleed screw and thread it 1-2 turns into the shock cap, then remove the screw. This will make it easier when you are bleeding your shocks.
2. Pull shock shaft down.
3. Fill shock body 3/4 full with silicone shock fluid.
4. Slowly move the shock shaft up and down to remove air from under the piston.
5. Wait for bubbles to come to surface.
6. Fill shock body to top with silicone shock fluid.
7. Place a drop of oil in the cap and on cap threads.
8. Install cap (without bleed screw) and tighten completely.
9. Slowly compress shaft all the way to bleed excess silicone shock fluid out the hole in the cap (use rag around shock to catch excess fluid).
10. Install M2x4mm button head screw until snug while shaft is fully compressed.

:: Bag 9 - Step 4

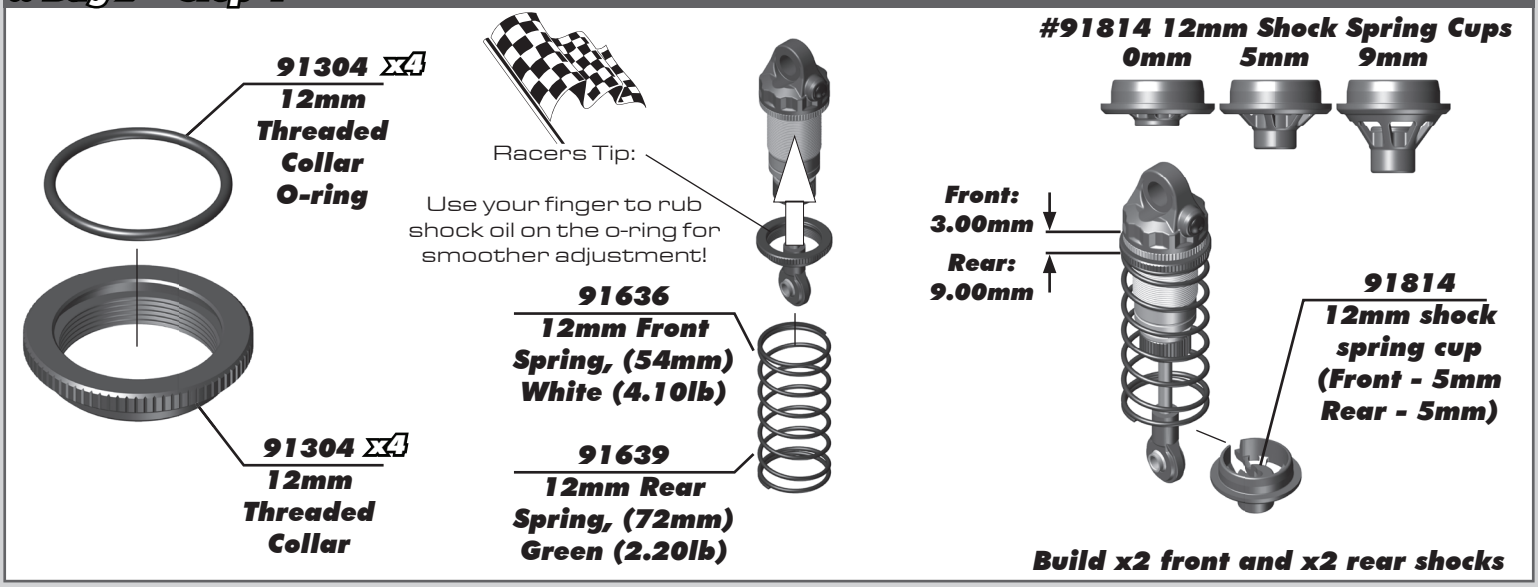

:: Bag 9 - Step 5

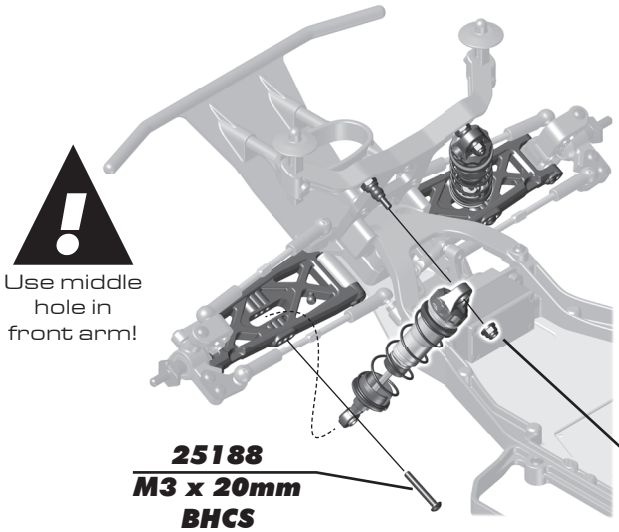

Build x2 (right and left side)

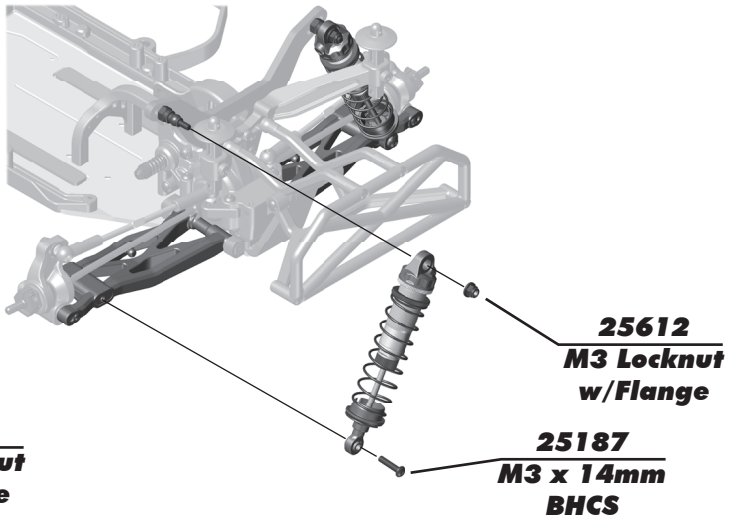

Build x2 (right and left side)

:: Bag 10 - Step 1

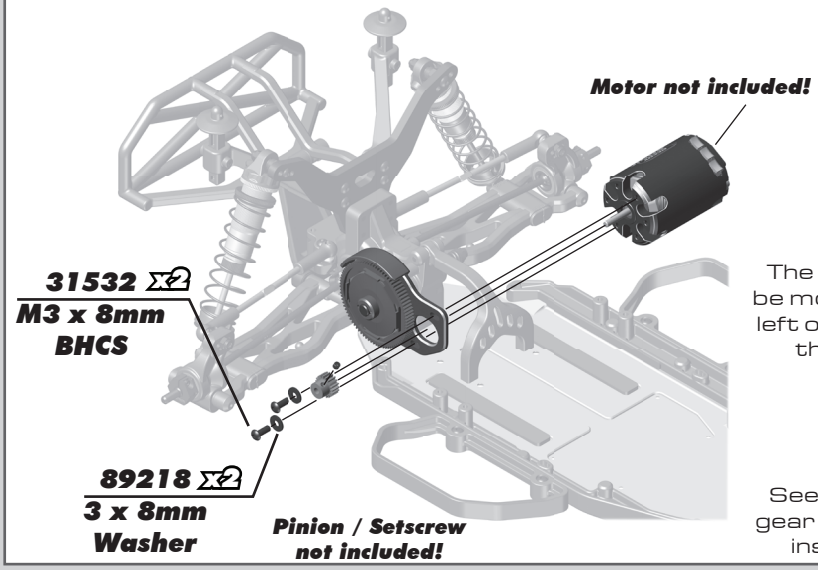

The antenna can be mounted on the left or right side of the chassis.

See page 21 for gear mesh setting instructions!

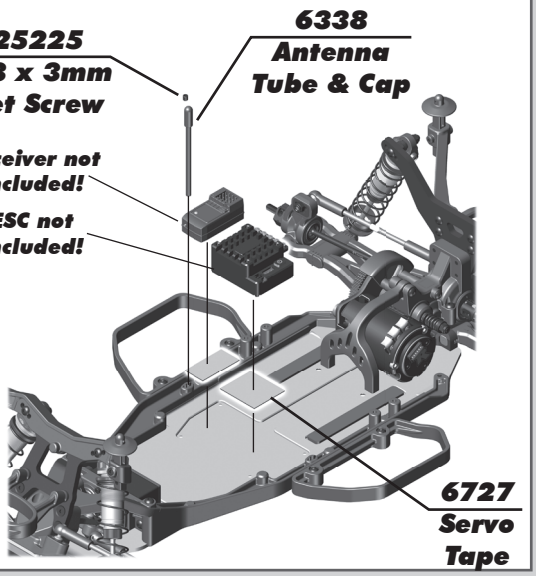

:: Bag 10 - Step 2

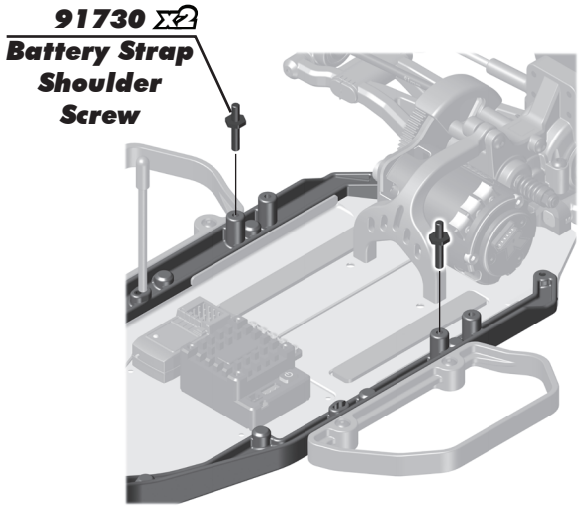

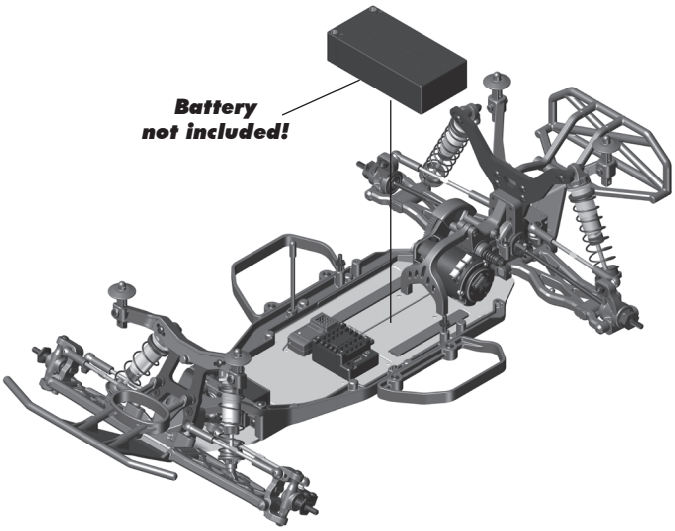

:: Bag 10 - Step 3

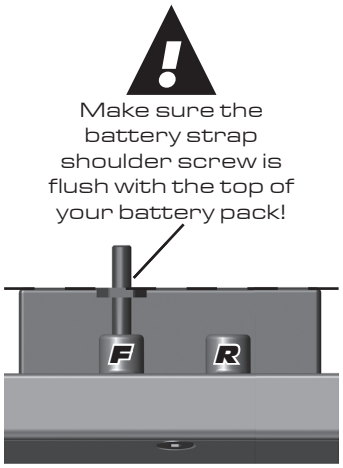

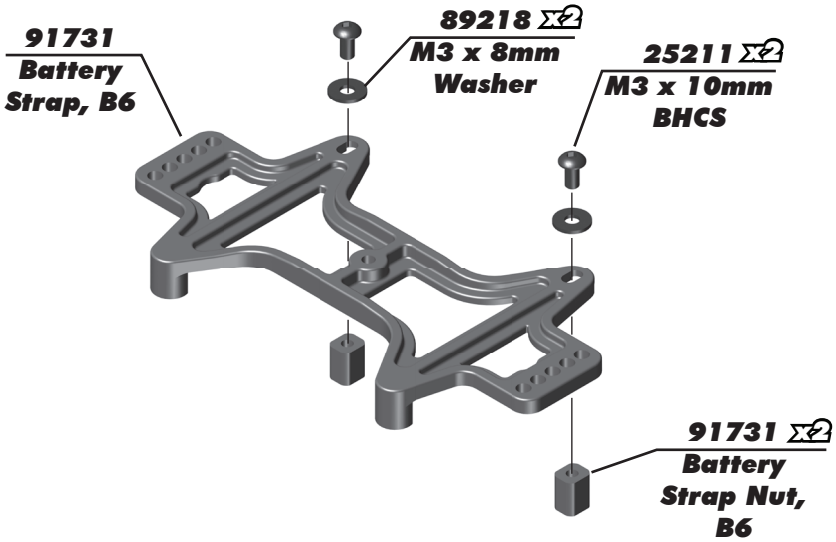

:: Bag 10 - Step 4

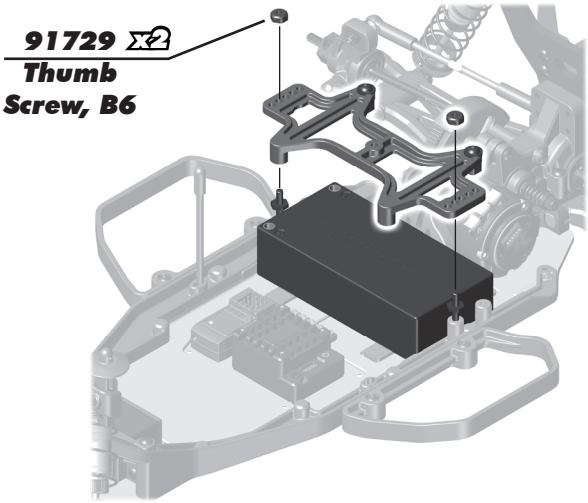

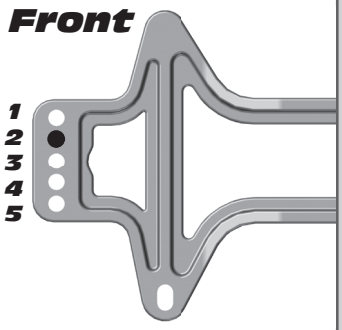

:: Bag 10 - Step 5

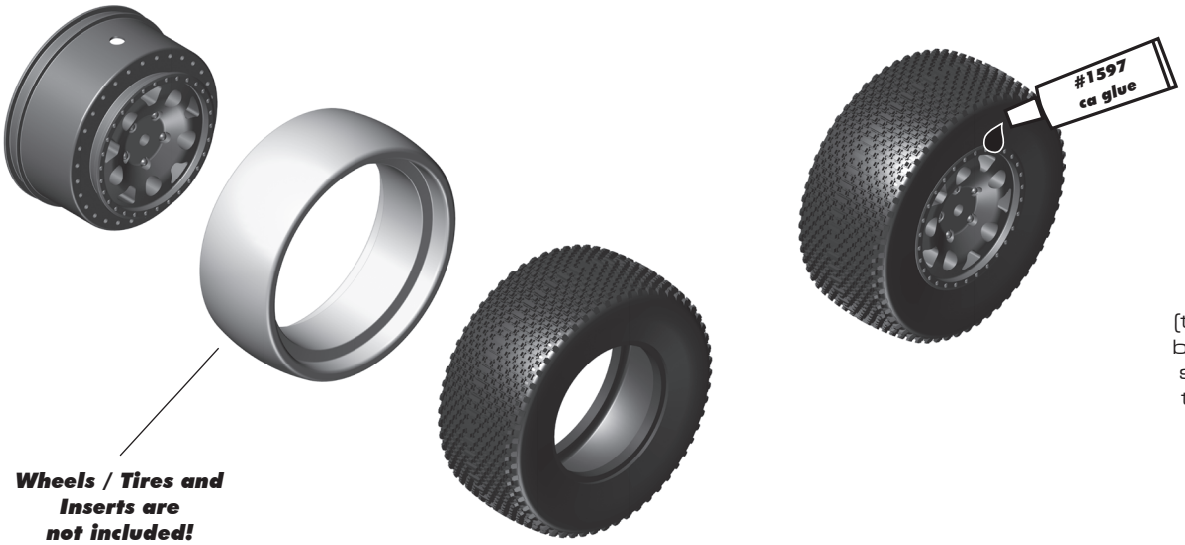

Carefully apply ca glue (tire adhesive) to the tire bead on the side. Do one side at a time, allowing it to dry before gluing the other side!

CA glue not included!

Build x4

:: Bag 10 - Step 6

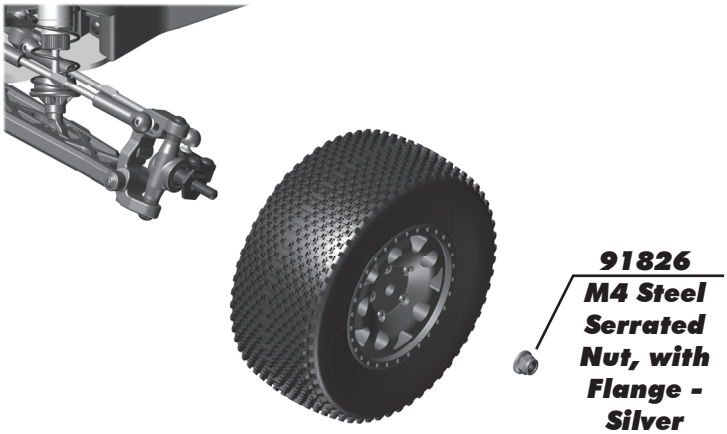

Build 2 (1 left, 1 right)

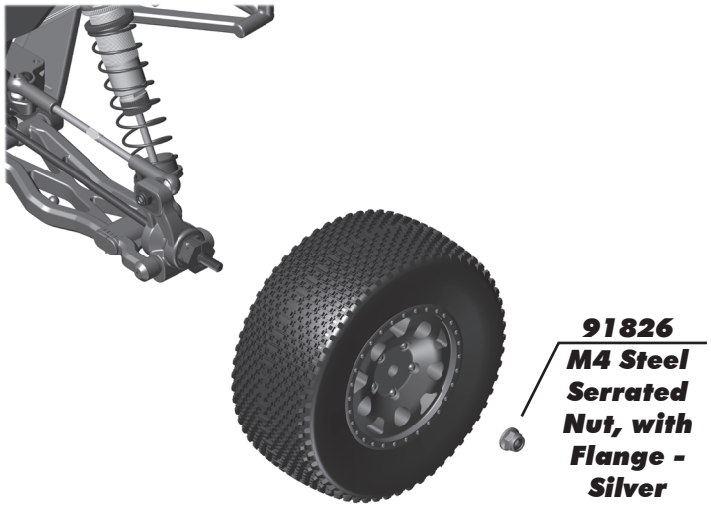

Build 2 (1 left, 1 right)

:: Rear Shock Mounting Option - Step 1

Use this setup to mount shocks on front of the rear arm. Suggested for high grip conditions.

Shocks mounted on the front of the rear arm increases forward weight bias.

- Less rear grip
- More / faster corner rotation

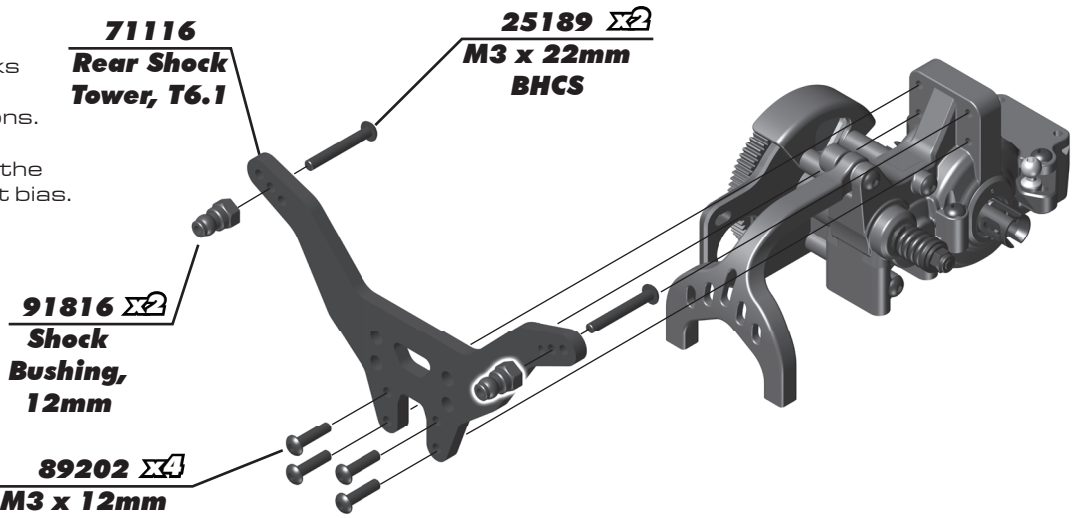

The screws are included in this kit!

:: Rear Shock Mounting Option - Step 2

The screws are included in this kit!

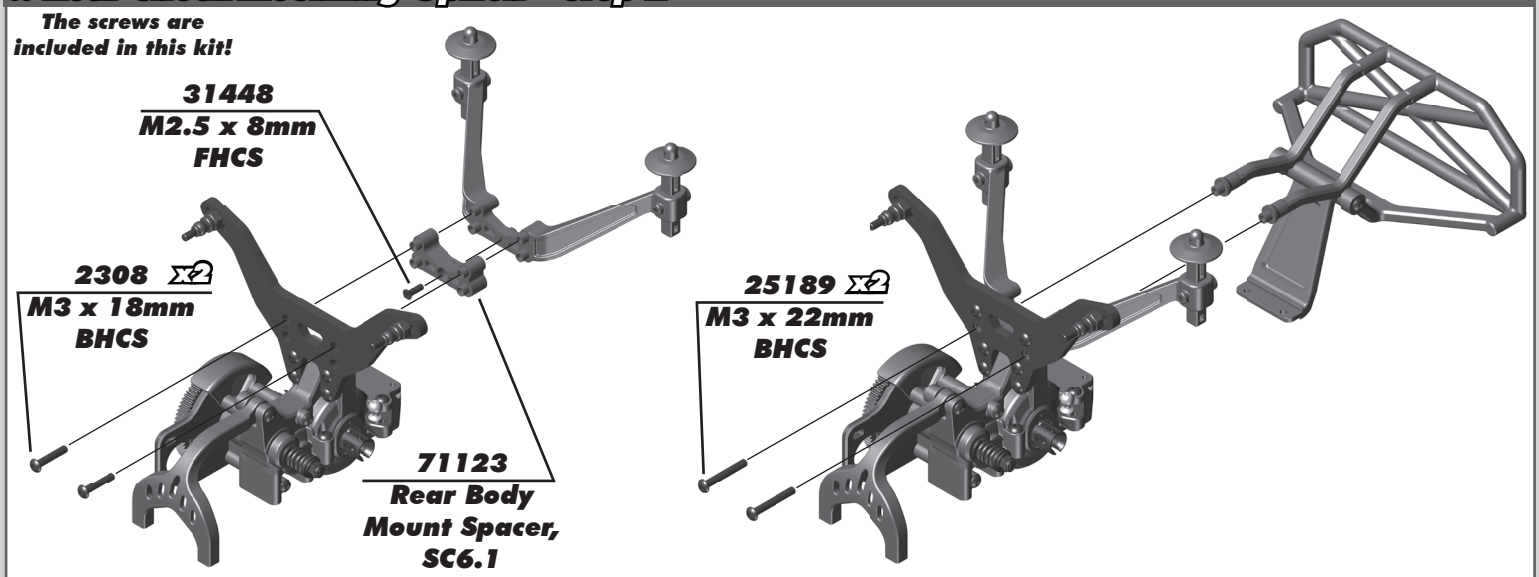

:: Tuning Tips

Painting:

Your Kit requires a clear polycarbonate body. You will need to prep the body before you can paint it.
Wash the INSIDE thoroughly with warm water and liquid detergent (do not use any detergents with scents or added hand lotion ingredients!). Dry the body using a clean, soft, lint-free cloth. Use the supplied window masks to cover the windows from the INSIDE of the body (RC bodies get painted on the inside). Using high quality masking tape, apply tape to the inside of the body to create a design. Spray (use either rattle can or airbrush) the paint on the inside of the body (preferably dark colors first, lighter colors last). NOTE: ONLY use paint that is recommended for (polycarbonate) plastics. If you do not, you can destroy the body! After the paint has completely dried (usually after 24 hours), cut the body along the trim lines. Make sure to drill or use a body reamer to make the holes for the antenna if needed! Use hook and loop tape to secure the body to the side rails of the vehicle.

Tips for Beginners:

Before making any changes to the standard setup, make sure you can get around the track without crashing. Changes to your vehicle will not be beneficial if you can't stay on the track. Your goal is consistent laps. Once you can get around the track consistently, start tuning your vehicle. Make only ONE adjustment at a time, testing it before making another change. If the result of your adjustment is a faster lap, mark the change on the included setup sheet (make adddtional copies of the sheet before writing on it). If your adjustment results in a slower lap, revert back to the previous setup and try another change. When you are satisfied with your vehicle, fill in the setup sheet thoroughly and file it away. Use this as a guide for future track days or conditions. Periodically check all moving suspension parts. Suspension components must be kept clean and move freely without binding to prevent poor and/or inconsistent handling.

Rear Arm Mount Pill Insert Setup:

The aluminum rear arm mounts utilize eccentric pill inserts to make fine adjustments to anti-squat, toe, pin height, and pin width. Adjustments can be made using the supplied inserts (#92014)

Standard Position

Use this position as a reference when changing pill locations.

Toe: 3°
Anti-squat: 1°
Roll Center: +0
Pivot Width: +0

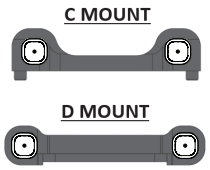

Insert Hole Locations

Dot indicates orientation of hole position

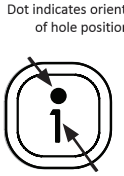

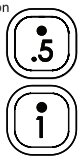

Hole 0.5° or 0.35mm from center

Hole 1.0° or 0.7mm from center

Number indicates degree of change: 0.5°, 1.0°, & 0° (center dot)

Possible Insert Locations

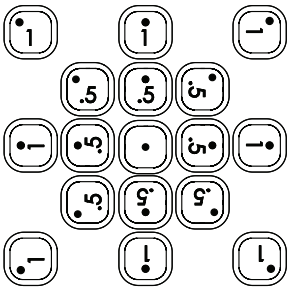

Anti-Squat Angle

More angle = More anti-squat
Less angle = Less anti-squat

*Shown in 1° changes

C MOUNT	D MOUNT	
		= 1°
		= 0°
		= -1°
		= 2°
		= 1°
		= 0°
		= 3°
		= 2°
		= 1°

Pin Width

More distance = wider pivot
Less distance = narrower pivot

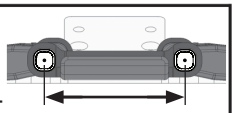

C MOUNT	D MOUNT	
		= +1.4mm
		= +0.7mm
		= 0mm
		= -0.7mm
		= -1.4mm

Toe Angle

More angle = More toe in
Less angle = Less toe in

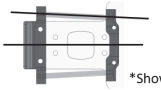

*Shown in 1° changes

C MOUNT	D MOUNT	
		= 3°
		= 4°
		= 5°
		= 2°
		= 3°
		= 4°
		= 1°
		= 2°
		= 3°

Pin Height

Higher pin = Higher roll center
Lower pin = Lower roll center

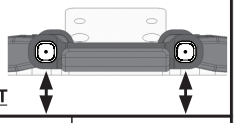

C MOUNT	D MOUNT	
		= +0.7mm
		= +0.35mm
		= 0mm
		= -0.35mm
		= -0.7mm

For additional setup tips, please visit our website by using the link or QR code below.

https://www.teamassociated.com/pdf/cars_and_trucks/RC10B6/B6_B6D_Pill-Chart.pdf

:: Tuning Tips (cont.)

Motor Gearing:

Proper motor gearing will result in maximum performance and run time while reducing the chance of overheating and premature motor failure. The gear ratio chart lists recommended **starting gear ratios** for the most widely used motor types. Gear ratios will vary depending upon motor brand, wind, and electronic speed control. Consult your motor and electronic speed control manufacturers for more information.
Team Associated is not responsible for motor damage due to improper gearing.

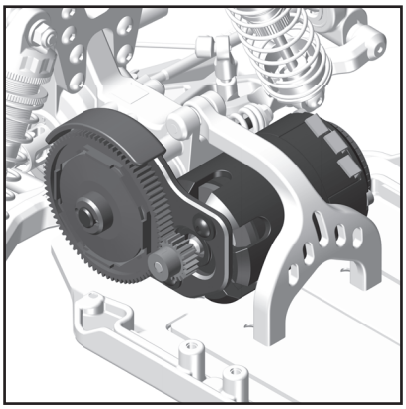

SC6.1 Gear Ratio Chart (Internal Gear Ratio 2.60:1)

Motor	Pinion	Spur	Final Drive Ratio
17.5 Reedy S-Plus Brushless	29	72	6.45:1
13.5 Reedy S-Plus Brushless	27	75	7.22:1
10.5 Reedy 540-M3 Brushless	24	78	8.45:1
9.5 Reedy 540-M3 Brushless	23	78	8.82:1
8.5 Reedy 540-M3 Brushless	22	78	9.22:1
7.5 Reedy 540-M3 Brushless	21	78	9.65:1
6.5 Reedy 540-M3 Brushless	20	78	10.14:1

Set The Gear Mesh:

You should be able to rock the spur gear back and forth in the teeth of the pinion gear without making the pinion gear move. If the spur gear mesh is tight, then loosen the #31532 screws and move the motor away, then try again.
A gear mesh that is too tight or too loose will reduce power and damage the gear teeth.

Diff Height Adjustment:

The diff height adjustment is a good way to tune the car for grip level. On high grip tracks and low chassis ride heights, setting your diff higher will be a good option. On lower grip tracks with higher chassis ride heights, setting your diff lower will be a better option.

Gear Box Type:

Selecting the correct gear box is dependent on the type of track it will be used on.
1) The optional 4 gear stand-up gear box is for the lowest grip conditions. This gear box moves the weight towards the rear of the car and also uses the rotation of the motor to transfer weight to the rear while on-power.
2) The 3 gear stand-up gear box also moves the weight towards the rear of the car, but in this configuration, the motor's rotation helps with on-power steering.
3) The lay-down gear box is used on high grip conditions when on-power steering and stability are most important. This gear box will change directions the quickest and generate the most steering.
4) The layback gear box is used for most indoor clay track conditions.

Slipper Clutch:

The assembly instructions give you a base setting for your clutch. Turn the nut on the top shaft screw so that the end of the top shaft screw is even with the outside of the nut. At the track, tighten or loosen the nut in 1/8 turn increments until you hear a faint slipping sound for 1-2 feet on takeoffs. Another popular way to set the clutch is to hold both rear tires firmly in place and apply short bursts of throttle. If the clutch is properly set, the front tires should lift slightly up off the surface.

Caster:

Caster describes the angle of the caster block as it leans toward the rear of the vehicle. Positive caster means the kingpin leans rearward at the top. The kit includes three inserts to adjust caster angle at the caster block, 0°, 2.5°, and +5°. The total caster angle is the sum of the kick-up angle and the caster block angle. Standard total caster angle for the B6 is 30°. That is achieved with a 25° kick-up and a +5° caster block angle.
For less entry steering and more exit steering, try 0° caster block angle.

Front Camber:

Camber describes the angle at which the tire and wheel rides when looked at from the front. Negative camber means that the tire leans inward at the top. A good starting camber setting is -1°. Positive camber, where the top of the tire is leaning out, is not recommended.
Optional #1719 camber gauge can be used to more accurately set camber.

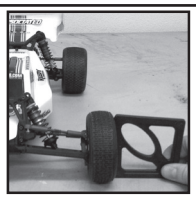

*Testing camber with camber gauge

Rear Camber:

Camber describes the angle at which the tire and wheel rides when looked at from the back. Negative camber means that the tire leans inward at the top. A good starting camber setting is -1°. Adding a small amount of positive camber, where the top of the tire is leaning out, will tend to improve straight-line acceleration on loose tracks.
Optional #1719 camber gauge can be used to more accurately set camber.

:: Tuning Tips

Front Camber Links:

Changing the length of the camber link is considered a bigger step than adjusting the ball end height on the tower. Shortening the camber link (or lowering the ball end) will give the front end less roll and quicken steering response. Lengthening the camber link (or raising the ball end) will give the front more roll and slower steering response. Longer camber links are typically used on high grip tracks and shorter links tend to work better on medium-grip loose tracks.

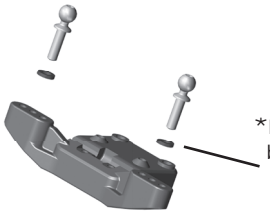

*Raise or lower the ball end by adding or removing washers here

Rear Camber Link:

Changing the length of the camber link is considered a bigger step than adjusting the ball end height on the rear chassis brace. Shortening the camber link (or lowering the ball end) will give the rear end less roll and the car will tend to accelerate or "square up" better. Lengthening the camber link (or raising the ball end) will give the rear more roll and more cornering grip. Longer camber links are typically used on high grip tracks, while shorter links tend to work better on medium grip loose tracks.
The kit setting is the best compromise of cornering grip and acceleration.

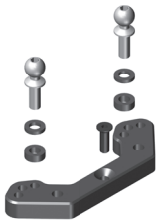

*Raise or lower the ball end by adding or removing washers here

Ackermann:

Ackermann is the angle difference between the front wheels when they are turned to steer the car. For minimal tire slip, it is standard for the inside wheel to steer to a greater angle than the outside wheel. The kit allows Ackermann adjustments by changing the washer thickness used behind the steering rack ballstuds. The kit setup uses 2mm washers and is most common for racing conditions. If corner entry steering is too aggressive, try increasing the Ackermann by removing shims from behind the steering rack ballstuds. Increasing the Ackermann will increase the angle difference of the front wheels when steered, resulting in a more stable car on corner entry.

Kickup:

Kickup is the angle the front suspension arm mounts at where the front of the arm is higher than the rear.
The standard kickup angle for the B6 is 25°, and is most common. If more corner entry steering is desired, try switching to the 30° front bulkhead setting.

Axle Height:

Axle height is used to keep roll centers similar when large ride height changes are made. As a rule of thumb, high axle heights are used for lower ride heights (< 20mm) and low axle heights are used for higher (> 22mm) ride heights. The idea is to keep the arms close to level at ride height.

Ride Height:

Ride height is the distance from the ground to the bottom of the chassis.
The standard front ride height setting is 19mm (Ride Height Gauge #1449). Check the front ride height by lifting up the entire car about 8-12 inches off the bench and dropping it. After the suspension "settles" into place, measure ride height (Ride Height Gauge #1449). Raise or lower the shock collars as necessary.

The rear ride height setting you should use most often is 19mm (Ride Height Gauge#1449). Check the rear ride height by lifting up the entire car about 8-12 inches off the bench and drop it. After the suspension "settles" into place, measure ride height (Ride Height Gauge #1449). Raise or lower the shock collars as necessary.

Wheelbase Adjustment:

You have three options for rear hub spacing; forward, middle, & back. The kit setting of middle is the most neutral, and will be used most often. For improved handling in bumps or rhythm sections, try moving the hubs to the back position. Hub forward is typically used on low grip or where there are lots of tight corners.

*Spacers to the rear will place hubs forward, shortening the wheelbase

Anti-Roll Bars:

The anti-roll bar kits (also called the "swaybar") allows you to add roll resistance to the front and/or rear end with minimal effect on handling over bumps and jumps. It is an especially helpful tuning item on high-grip tracks.

Shock Mounting Position:

The rear shocks can be mounted on the front or rear of the rear suspension arm. Mounting the shocks on the front of the arm reduces rear weight bias. This causes the car to turn quicker and also steer more on-power. Usually this is used on high bite tracks in order to keep the car steering while applying throttle. Mounting the shocks on the rear of the arm increases rear weight bias and keeps the rear end planted while making the steering radius larger.
This setting is typically easier to drive and will produce more rear traction.

:: Shocks

4187	.030 Nylon Washer	12
31327	VCS3 Shock Bottom Cap and O-Ring	2 ea.
31510	2x4mm BHCS	6
89278	2.6x6mm Washer	20
91304	12MM Threaded Collar and O-Ring	2
91481	12x27.5MM V2 Shock Bodies	2
91483	12x36MM V2 Shock Bodies	2
91491	12MM V2 Shock Rebuild Kit	1
91492	M2 x 4mm BHCS with Washer	2
91493	FT Low Friction X-Rings	8
91495	12 mm V2 X-Ring Rebuild Kit	1
91619	3 x 27.5mm Shock Shaft (V2), TiN	2
91623	3 x 35mm Shock Shaft (V2), TiN	2
91626	FT 12mm Pistons (V2), 2x1.6 mm, flat	4
91627	FT 12mm Pistons (V2), 2x1.7 mm, flat	4
91814	B6.1 Shock Caps/Spring Cups	4 ea.
91819	B6.1 Shock Pivot Balls	4
91820	B6.1 Ball Ends	1

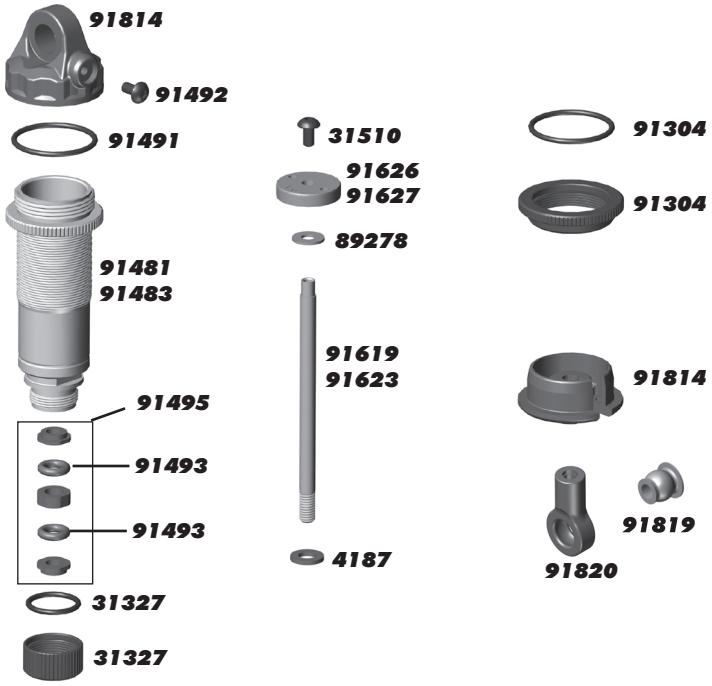

:: Ball Differential

1733	Diff Shims	8
6573	Diff Thrust Washer & Bolt	2
6574	Precision Diff Thrust Balls, 5/64"	6
6575	Locking T-Nut, Diff Thrust Bolt, & Cover	1
6581	3/32" Carbide Diff Balls	12
6582	Diff Thrust Spring	1
7666	Diff Drive Rings, 2.60:1	2
7677	Ball Diff Rebuild Kit	1
31400	Bearing, 5 x 8mm	2
91419	Diff Gear, B5	1
91701	Ball Diff Outdrive, B6	1 ea.
91702	Ball Diff Kit, B6	1

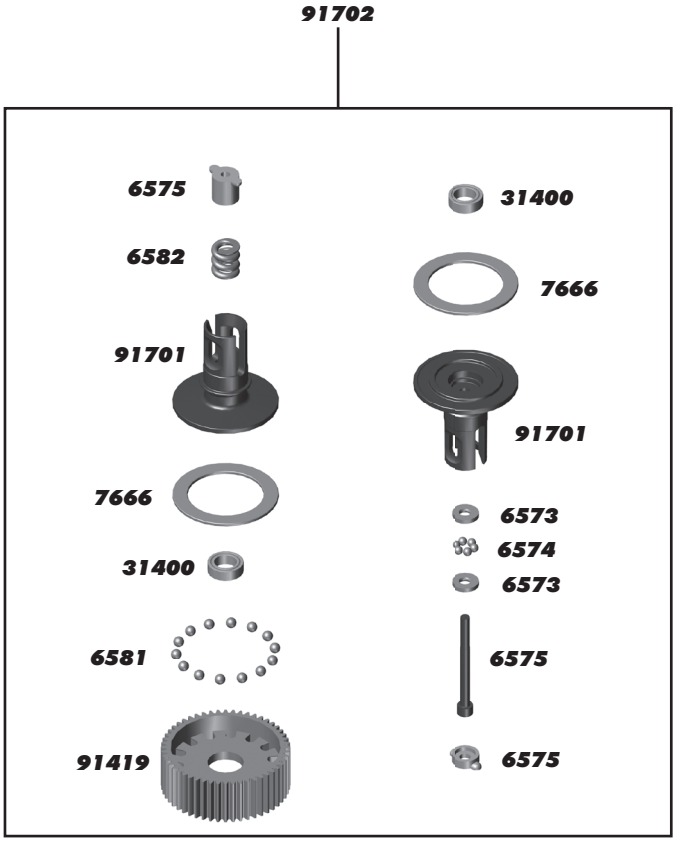

:: Shock Springs

91635	Front Shock Spring, 54mm, Green 3.75lbs	Pr.
91636	Front Shock Spring, 54mm, White 4.10lbs - KIT	Pr.
91637	Front Shock Spring, 54mm, Gray 4.45lbs	Pr.
91639	Rear Shock Spring, 72mm, Green 2.20lbs - KIT	Pr.
91640	Rear Shock Spring, 72mm, White 2.40lbs	Pr.
91641	Rear Shock Spring, 72mm, Gray 2.60lbs	Pr.

:: Shock Fluid

5420	10 Weight Silicone Shock Fluid	2oz.
5421	20 Weight Silicone Shock Fluid	2oz.
5422	30 Weight Silicone Shock Fluid	2oz.
5423	40 Weight Silicone Shock Fluid	2oz.
5424	22.5 Weight Silicone Shock Fluid	2oz.
5425	80 Weight Silicone Shock Fluid	2oz.
5426	27.5 Weight Silicone Shock Fluid	2oz.
5427	15 Weight Silicone Shock Fluid	2oz.
5428	25 Weight Silicone Shock Fluid	2oz.
5429	35 Weight Silicone Shock Fluid	2oz.
5430	45 Weight Silicone Shock Fluid	2oz.
5431	55 Weight Silicone Shock Fluid	2oz.
5432	32.5 Weight Silicone Shock Fluid	2oz.
5433	37.5 Weight Silicone Shock Fluid	2oz.
5434	42.5 Weight Silicone Shock Fluid	2oz.
5435	50 Weight Silicone Shock Fluid	2oz.
5436	60 Weight Silicone Shock Fluid	2oz.
5437	70 Weight Silicone Shock Fluid	2oz.
5438	47.5 Weight Silicone Shock Fluid	2oz.

:: Transmission

25188	M3 x 20mm BHCS	10
25202	M3 x 10mm FHCS	10
25204	M3 x 16mm FHCS	10
31383	Ballstud Washers, 5.5x2.0 mm, blue aluminum	10
31448	M2.5 x 8mm FHCS	10
31532	M3 x 8mm BHCS	10
89202	M3 x 12mm BHCS	10
89203	M3 x 16mm BHCS	10
89218	M3 x 8mm Washers	10
91048	Heavy-duty Ballstuds, 8 mm	10
91132	4x4 FT Idler Shafts, aluminum	2
91560	FT Bearings, 5x10x4 mm	4
91709	B6 Chassis Braces	1 ea.
91717	B6 Idler Gear, 26T, standup	2
91775	B6.1 Rear Ballstud Mount	1
91790	B6.1 Layback Gearbox	1
91795	B6.1 Laydown Motor Plate	1
91799	B6.1 Laydown Top Shaft	1
91813	B6.1 Gear Cover	1
91819	B6.1 Shock Pivot Balls	4

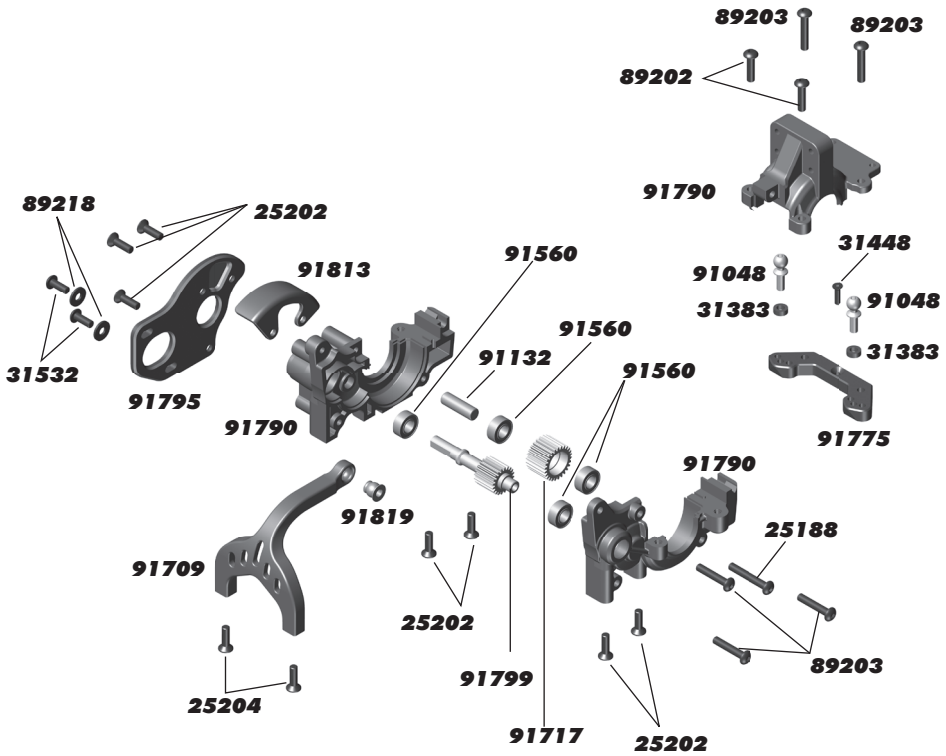

:: Slipper Clutch

9611	Slipper Pad, V2	2
25215	Locknuts, M3	10
91799	B6.1 Laydown Top Shaft	1
91801	B6.1 Slipper Spring and Adaptors	1
91803	B6.1 Slipper Hub, Inner	1
91804	B6.1 Slipper Hub, Outer	1
91805	B6.1 HTC Slipper Hub Outer	1
91808	B6.1 Spur Gear, 69T - 48P	1
91809	B6.1 Spur Gear, 72T - 48P	1
91810	B6.1 Spur Gear, 75T - 48P	1
91811	B6.1 Spur Gear, 78T - 48P	1
91812	B6.1 Spur Gear, 81T - 48P - KIT	1

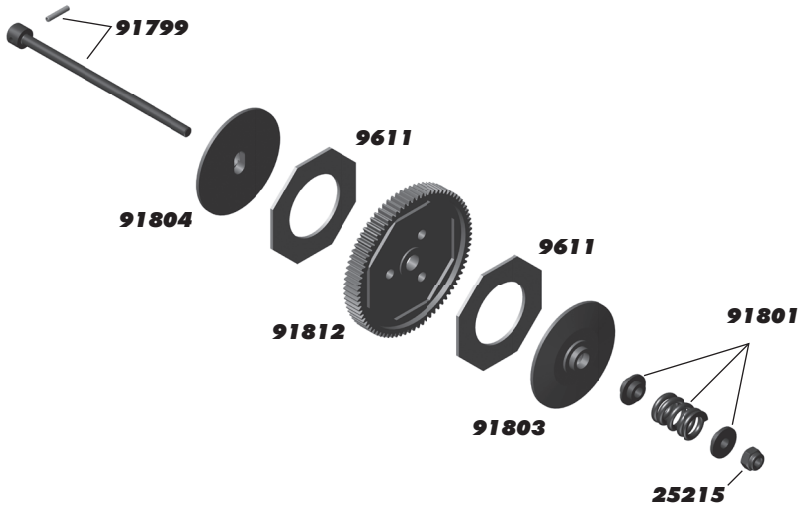

:: Pinion Gears

1335	17T 48P Aluminum Pinion Gear	1
1336	18T 48P Aluminum Pinion Gear	1
1337	19T 48P Aluminum Pinion Gear	1
1338	20T 48P Aluminum Pinion Gear	1
1339	21T 48P Aluminum Pinion Gear	1
1340	22T 48P Aluminum Pinion Gear	1
1341	23T 48P Aluminum Pinion Gear	1
1342	24T 48P Aluminum Pinion Gear	1
1343	25T 48P Aluminum Pinion Gear	1
1344	26T 48P Aluminum Pinion Gear	1
1345	27T 48P Aluminum Pinion Gear	1
1346	28T 48P Aluminum Pinion Gear	1
1347	29T 48P Aluminum Pinion Gear	1
1348	30T 48P Aluminum Pinion Gear	1
1349	31T 48P Aluminum Pinion Gear	1
1350	32T 48P Aluminum Pinion Gear	1
1351	33T 48P Aluminum Pinion Gear	1
1352	34T 48P Aluminum Pinion Gear	1
1353	35T 48P Aluminum Pinion Gear	1
25225	M3 x 3mm Set Screw	20

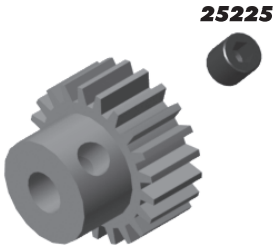

:: Optional Gear Differential

31522	M2.5 x 10mm BHCS	10
91563	FT Bearings, 10x15x4 mm	4
91780	B6.1 Gear Differential Rebuild	1
91782	B6.1 Gear Differential Seals	1
91783	B6.1 Gear Differential Case	1
91784	B6.1 Aluminum Cross Pins	2
91785	B6.1 Gear Differential Outdrives	2
91786	B6.1 Gear Differential	1
91792	B6.1 Differential Height Inserts	2 ea.
5450	Silicone Diff Fluid 1,000CST	1
5451	Silicone Diff Fluid 2,000CST	1
5452	Silicone Diff Fluid 3,000CST	1
5444	Silicone Diff Fluid 4,000CST	1
5453	Silicone Diff Fluid 5,000CST	1
5446	Silicone Diff Fluid 6,000CST	1
5454	Silicone Diff Fluid 7,000CST	1
5455	Silicone Diff Fluid 10,000CST	1
5447	Silicone Diff Fluid 15,000CST	1
5456	Silicone Diff Fluid 20,000CST	1
5457	Silicone Diff Fluid 30,000CST	1
5458	Silicone Diff Fluid 60,000CST	1
5448	Silicone Diff Fluid 80,000CST	1
5459	Silicone Diff Fluid 100,000CST	1
5461	Silicone Diff Fluid 200,000CST	1
5463	Silicone Diff Fluid 500,000CST	1
5465	Silicone Diff Fluid 1,000,000CST	1

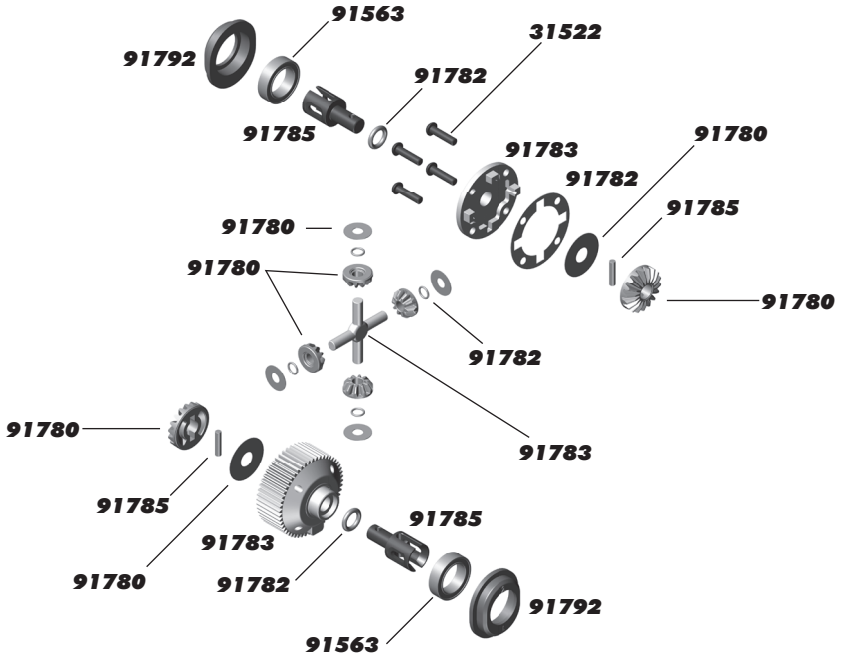

:: Turnbuckles and Servo Mounts

4671	M3 x 10mm Set Screw	6
7253	Turnbuckles, 67mm (2.62"), Steel	2
9175	Turnbuckles, 58mm	2
25211	M3 x 10mm BHCS	20
31284	Ball Studs Long, 8mm	6
31382	FT Ballstud Washer, aluminum1mm	10
31532	M3 x 8mm BHCS	6
89218	M3 x 8mm Washers	10
91719	Servo Mount, B6	2
91722	Ball Cups, B6	12
91728	B6 Servo Horns, 15.5 mm	1
91820	B6.1 Ball Ends	1

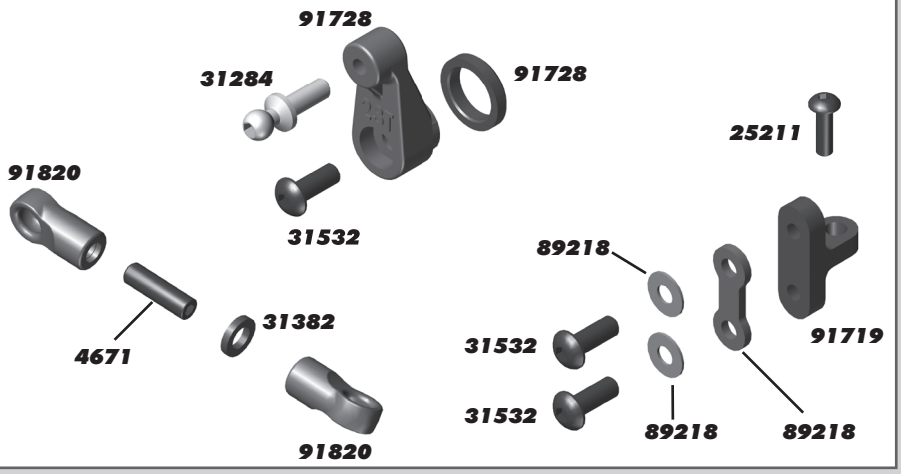

:: Battery Strap

25211	M3 x 10mm BHCS	10
89218	3 x 8mm Washers	10
91729	Thumb Screw, B6	2
91730	Battery Strap Shoulder Screw	2
91731	Battery Strap, B6	1

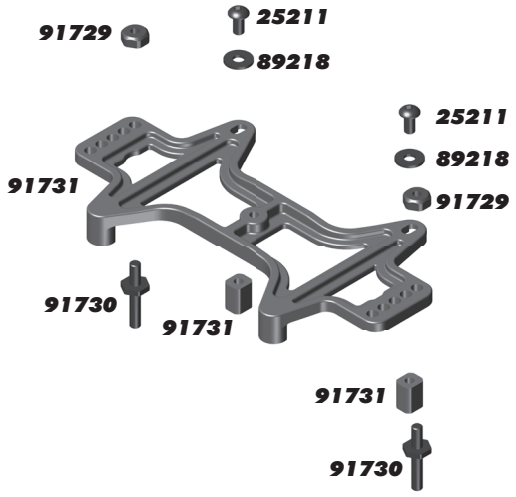

:: Front Arm

25187	M3 x 14mm BHCS	10
25188	M3 x 20mm BHCS	10
25215	M3 Locknut, Black	10
31382	FT Ballstud Washer, aluminum1mm	10
31510	M2 x 4mm BHCS	6
31531	M3 x 6mm, BHCS	6
31532	M3 x 8mm, BHCS	6
71103	T6.1 Front Arms	Pr.
71111	T6.1 Front Axle, 8.50mm	2
91048	Heavy-duty Ballstud, 8mm	8
91049	Heavy-duty Ballstud, 10mm	8
91560	FT Bearing, 5 x 10 x 4	4
91670	Hinge Pin Set, B6	1
91676	B6 Caster Hat Bushings	2 ea.
91679	B6 Steering Block Arms	2
91776	B6.1 Caster/Steering Blocks	1
91826	M4 Serrated Wheel Nut, Steel (Silver)	10

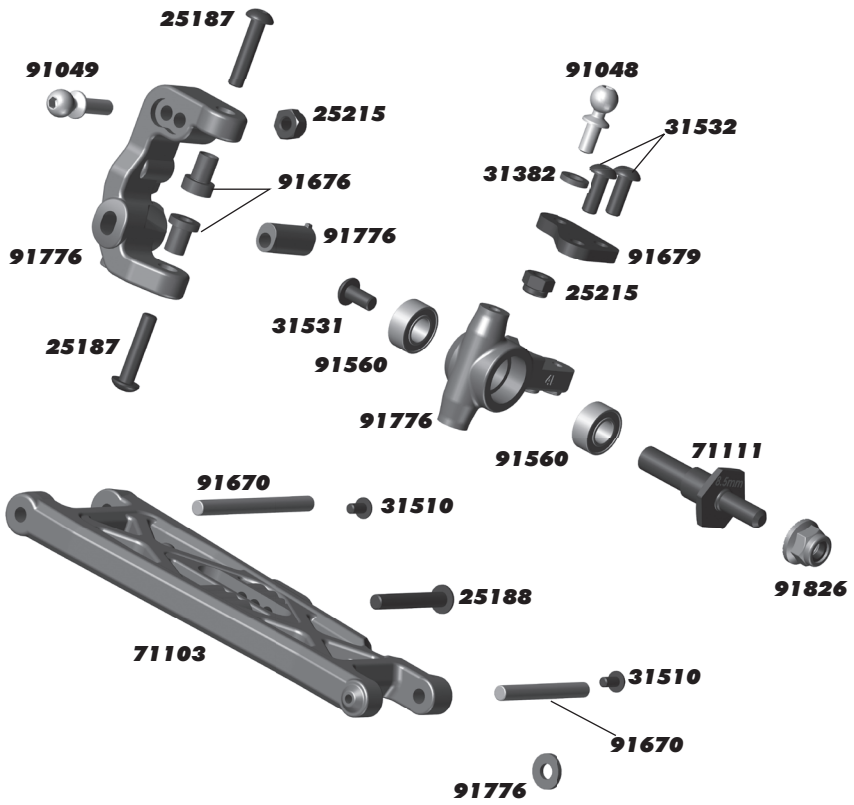

:: Rear Arm

25187	M3 x 14mm BHCS	10
25215	M3 Locknut, Black	10
31510	M2 x 4mm BHCS	6
71105	T6.1 Rear Suspension Arm	Pr.
71113	T6.1 CVA Bone (91mm)	2
89218	Washer, 3 X 8mm	10
91049	Heavy-duty Ballstud, 10mm	8
91436	CVA/Wheel Hex Pin, B5	4
91438	CVA Rebuild Kit, B5	1
91562	FT Bearing, 6 x 13 x 5	4
91563	FT Bearing, 10 x 15 x 4	4
91610	FT Clamping Wheel Hexes, 7.0mm	2
91611	M1.6 x 5mm SHCS	4
91670	Hinge Pin Set, B6	1
91698	Rear Hub Link Nut, B6	2
91826	M4 Serrated Wheel Nut, Steel (Silver)	10
92055	B64 Rear Hubs	Pr.
92062	B64 Rear Axles	2

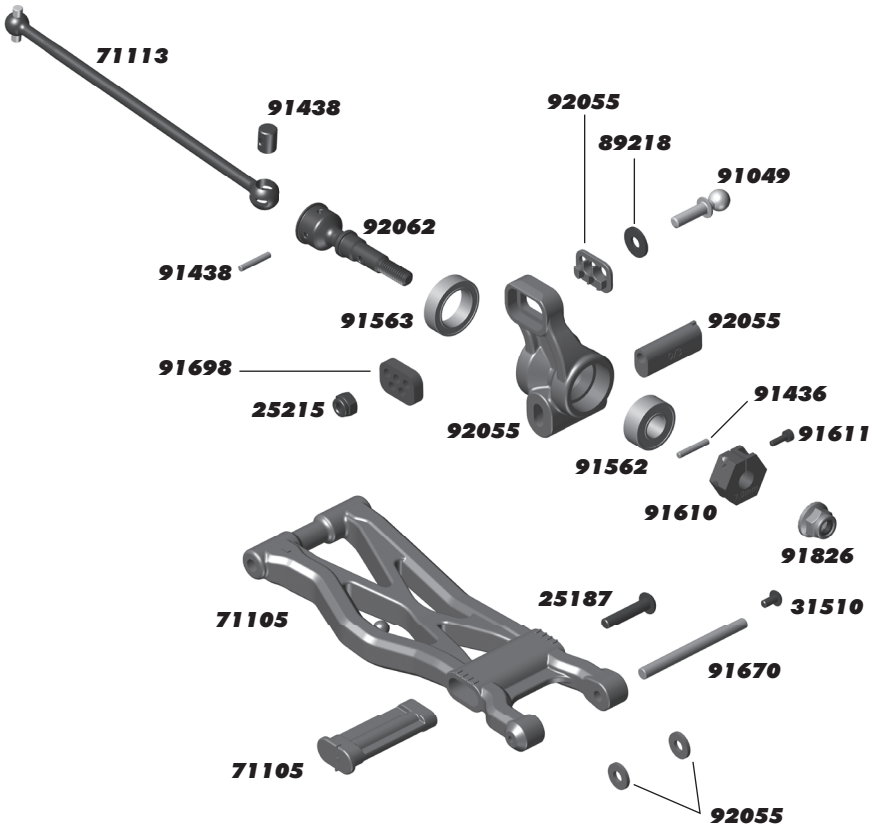

:: Front Shock Tower

25189	M3 x 22mm BHCS	10
25203	M3 x 12mm FHCS	10
25612	M3 Locknuts w/Flange	10
31532	M3 x 8mm BHCS	10
71032	M2.5 x 14mm SHCS	10
71115	T6.1 Front Shock Tower	1
71123	SC6.1 Body Mounts	1
91815	Shock Bushing, 10mm	4

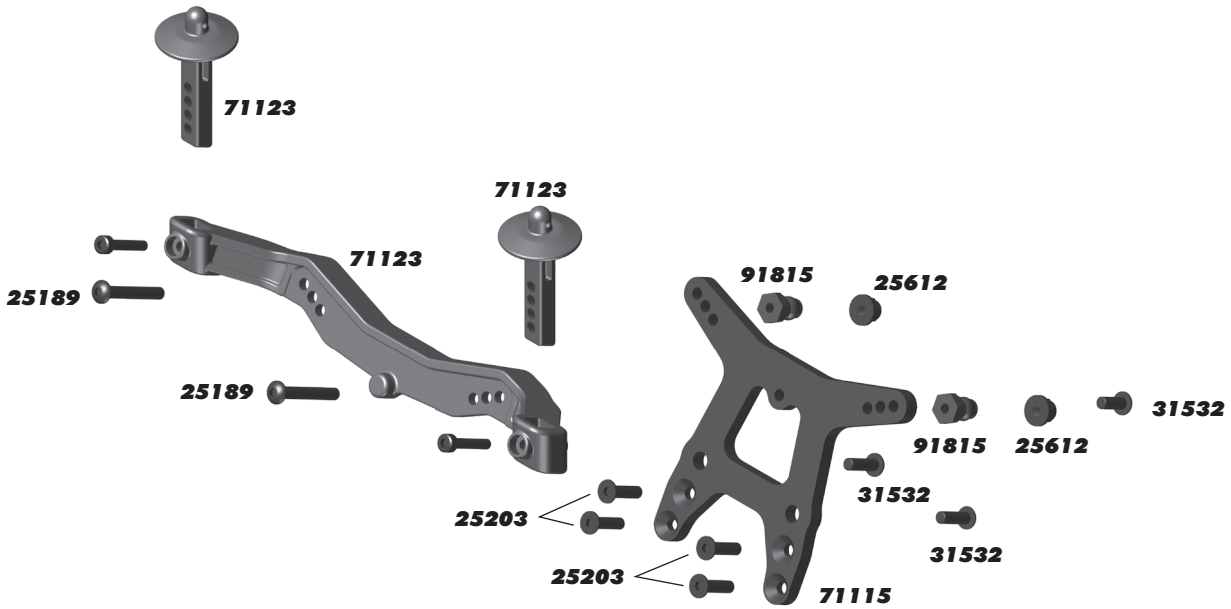

:: Rear Shock Tower

25187	M3 x 14mm BHCS	10
25189	M3 x 22mm BHCS	10
25211	M3 x 10mm BHCS	10
25612	M3 Locknuts w/Flange	10
31448	M2.5 x 8mm FHCS	10
71032	M2.5 x 14mm SHCS	10
71116	T6.1 Rear Shock Tower	1
71123	SC6.1 Body Mounts	1
89202	M3 x 12mm BHCS	10
91816	Shock Bushing, 12mm	4

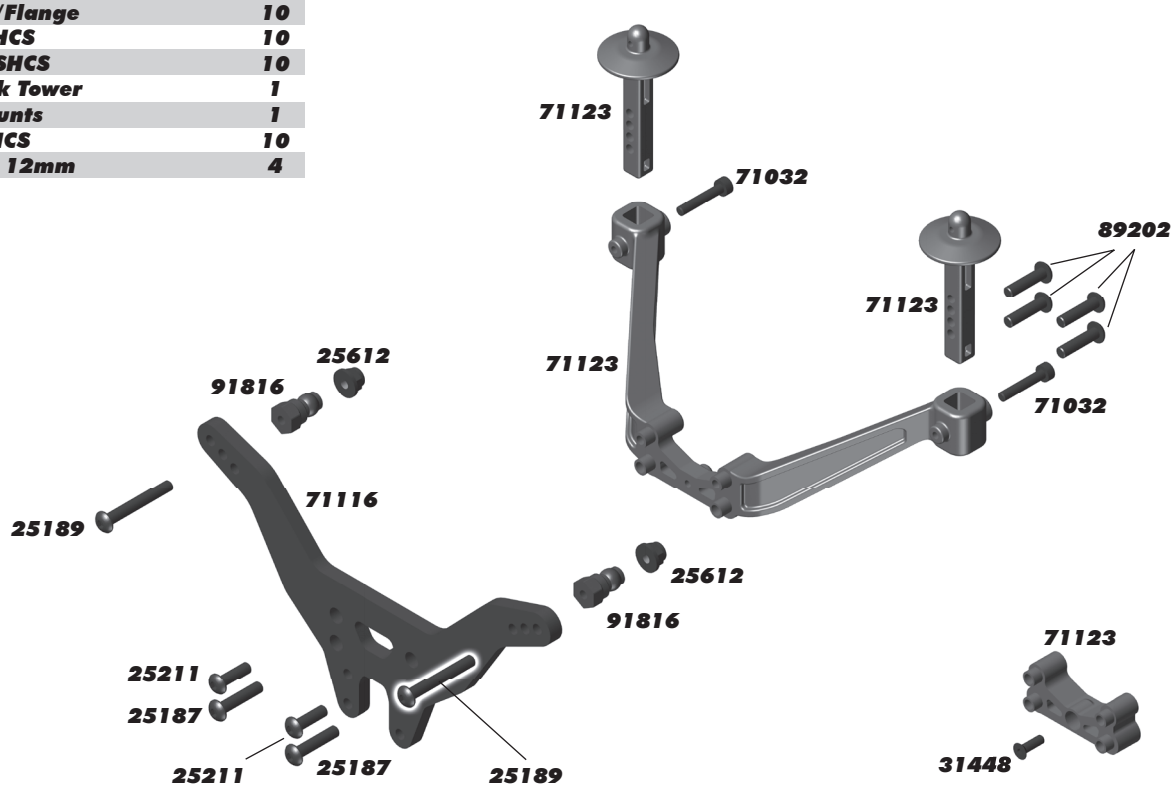

:: Front and Rear Bumpers

25187	M3 x 14mm BHCS	10
25211	M3 x 10mm BHCS	10
25215	M3 Locknut, Black	10
71037	M3 x 45mm BHCS	10
71124	SC6.1 Front Bumper & Nerf Bars	1
71125	SC6.1 Rear Bumper	1

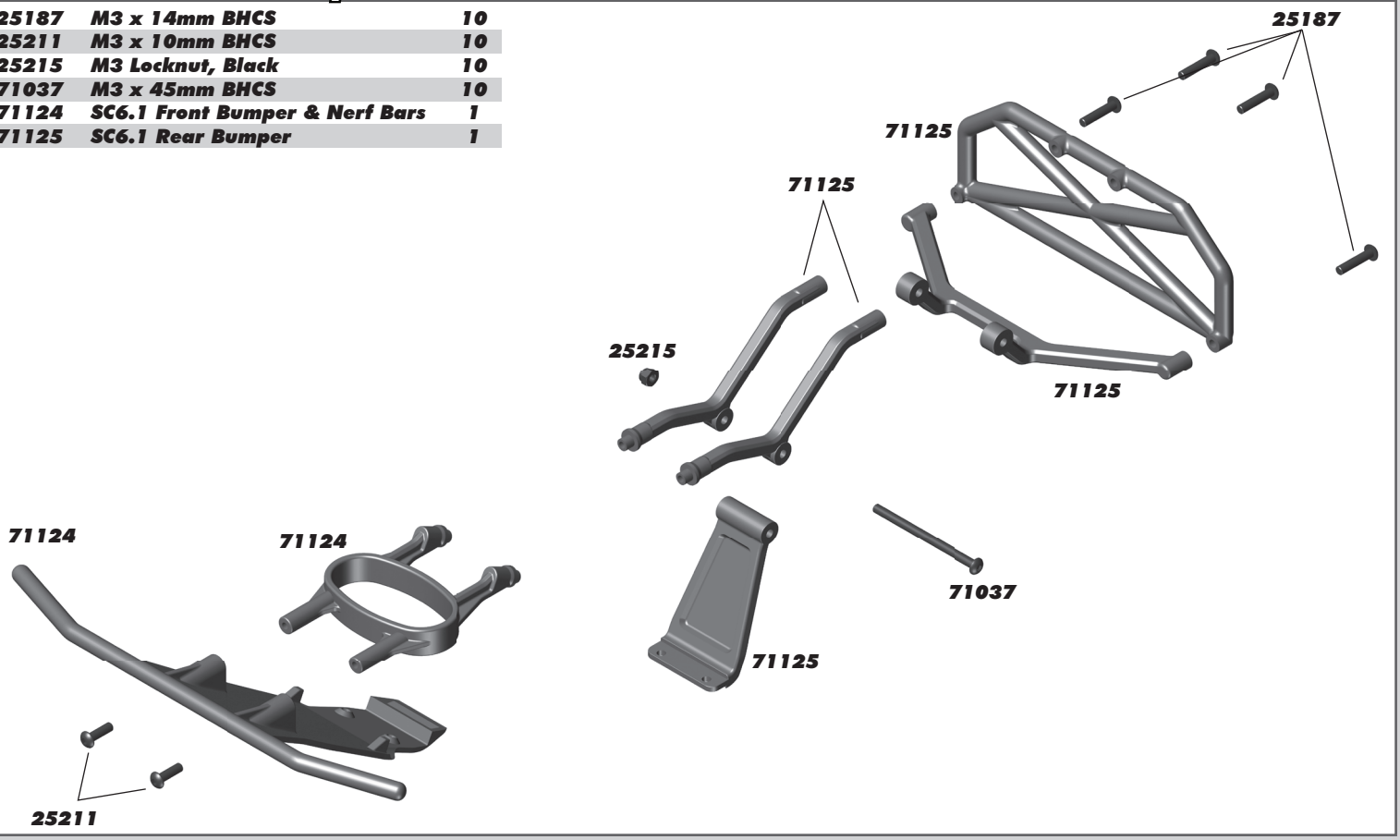

:: Front Bulkhead / Steering

25187	M3 x 14mm BHCS	10
25204	M3 x 16mm FHCS	10
25211	M3 x 10mm BHCS	10
25225	M3 x 3mm Set Screw	10
31283	Ball Studs, Long, 5mm	6
31382	Ballstud Washers, 5.5x1.0 mm, blue aluminum	10
89202	M3 x 12mm BHCS	8
91048	Heavy-duty Ballstud, 8mm	8
91049	Heavy-duty Ballstud, 10mm	8
91475	3x7x3 Ball Bearing	1
91656	Bulkhead, B6	1
91667	Steering Assembly, B6	1
91678	M3 x 20mm BHCS, Shouldered	10
91766	B6.1 Top Plate, Ballstud Mount	1 ea.

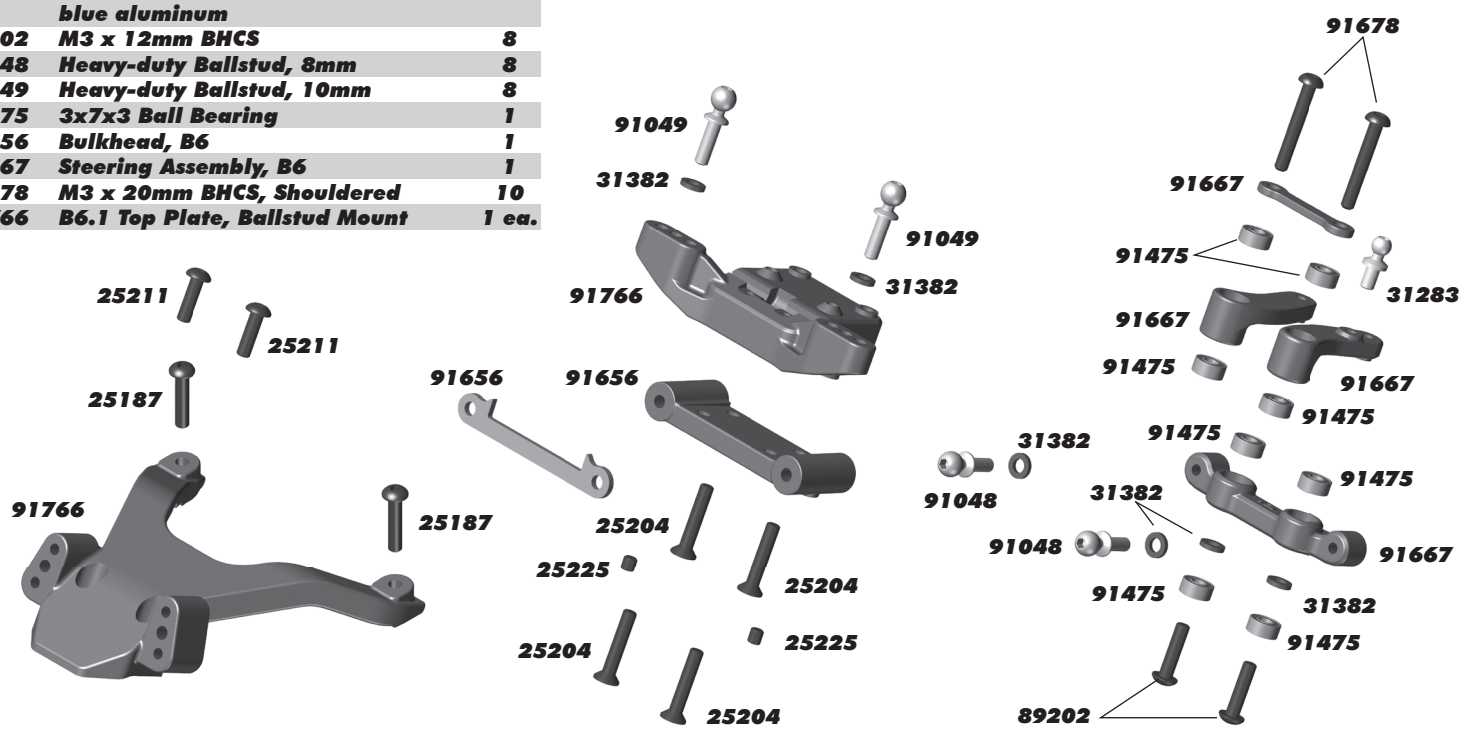

:: Chassis

6338	Antenna Tube & Cap (black)	1
25201	M3 x 8mm FHCS	20
25202	M3 x 10mm FHCS	20
25204	M3 x 16mm FHCS	20
25225	M3 x 3mm Set Screw	20
31532	M3 x 8mm BHCS	10
31541	M3 x 6mm FHCS	10
71120	SC6.1 Chassis	1
71121	SC6.1 Side Rails	Pr.
71124	SC6.1 Nerf Bars	Pr.
91670	Hinge Pin Set, B6	1
91688	Aluminum Arm Mount (D), B6	1
91772	B6.1 Aluminum Arm Mount (C)	1
91734	Battery Foam, B6	1
92014	Arm Mount Inserts	4 ea.

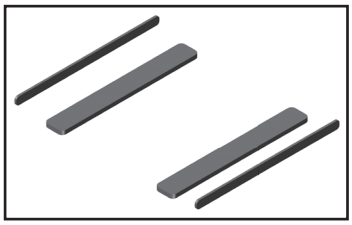

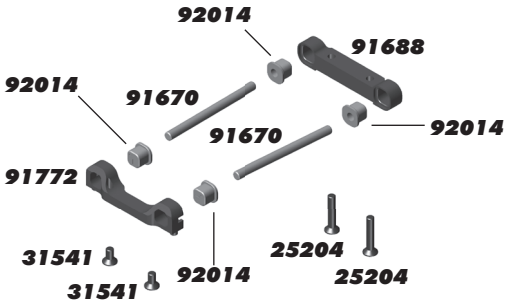

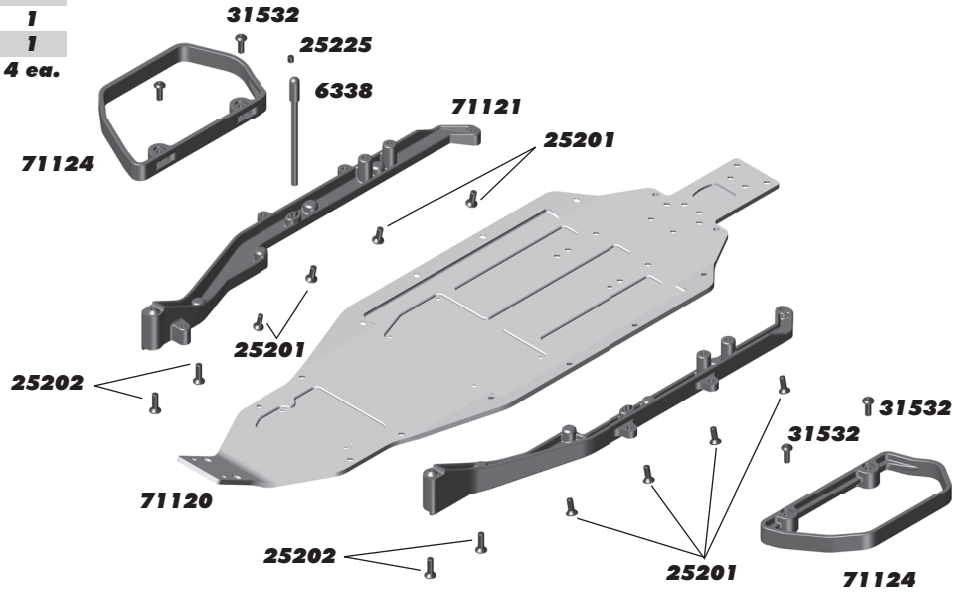

:: Wheels / Tires

71040	Method 12mm Hex Wheel, Black	2
71058	Multi-Terrain Tire w/Inserts	2

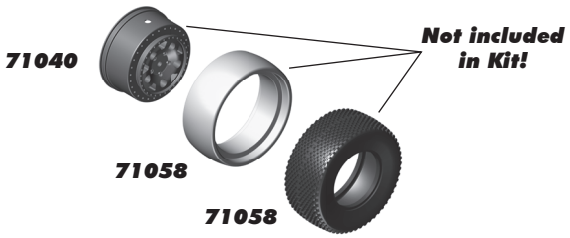

:: Reedy ESC's

256C	Blackbox 1000Z+/540-M3 10.5 Combo	1
258C	Blackbox 1000Z+/540-M3 8.5 Combo	1
259C	Blackbox 1000Z+/540-M3 8.0 Combo	1
260C	Blackbox 1000Z+/540-M3 7.5 Combo	1
261C	Blackbox 1000Z+/540-M3 7.0 Combo	1
262C	Blackbox 1000Z+/540-M3 6.5 Combo	1
27002	Blackbox 800Z 2S Zero-Timing Competition ESC	1
27003	Blackbox 1000Z+ 2S Competition ESC	1
27004	Blackbox 510R Competition ESC	1
27005	Blackbox 510R Competition ESC w/PROgrammer2	1
27006	Blackbox 600Z 2S Zero-Timing Competition ESC	1
27024	Blackbox Pro Capacitor Unit	1
27026	Blackbox 1000Z+ Fan w/Screws	1
27027	Blackbox PROgrammer2	1
27028	Blackbox 30x30x7mm Fan w/screws	1
27029	Blackbox Pro Modified Capacitor Unit	1
27030	Blackbox ESC/Programmer2 Connection Wire	1

:: Reedy Servos & Accessories

27100	RS1206 Digital HV Hi-Speed Competition Servo	1
27101	RT1508 Digital HV Hi-Torque Competition Servo	1
27102	RS1206 Servo Case Set w/screws	1
27103	RS1206 Servo Gear Set	1
27104	RT1508 Servo Case Set w/screws	1
27105	RT1508 Servo Gear Set	1
27106	RS1806A Digital HV Hi-Speed Alum. Comp. Servo	1
27107	RT2207A Digital HV Hi-Speed Alum. Comp. Servo	1
27108	RS0806 Digital HV Hi-Speed LP Competition Servo	1
27109	RT1408 Digital HV Hi-Speed LP Competition Servo	1
27110	0712MG Digital Servo	1
27111	1514MG Digital Servo	1
27120	RS1806A Servo Gear Set	1
27121	RT2207A Servo Gear Set	1
27124	RS0806 LP Case Set	1
27125	RS0806 LP Gear Set	1
27126	RT1408 LP Case Set	1
27127	RT1408 LP Gear Set	1
27129	0712MG Servo Gear Set	1
27130	1514MG Servo Gear Set	1

:: Reedy Batteries

302	AA Alkaline 1.5V (4)	1
304	LiPo Pro TX/RX Battery 1600mAh 7.4V Flat	1
305	LiFe Pro TX/RX Battery 1300mAh 6.6V Flat	1
27313	LiPo Pro TX/RX 2400mAh 7.4V Flat	1
27315	LiFe Pro TX/RX 1600mAh 6.6V Flat	1
27318	Wolfpack HV LiPo 50C 4200mAh 7.6V Shorty	1
27319	Wolfpack HV LiPo 50C 3300mAh 7.6V LP Shorty	1
27322	Zappers SG HV-LiPo 7.6V 4800mAh 110C Shorty	1
27323	Zappers SG HV-LiPo 7.6V 5800mAh 80C Shorty	1
27324	Zappers SG HV-LiPo 7.6V 3600mAh 110C LP Shorty	1
27325	Zappers SG HV-LiPo 7.6V 4000mAh 80C LP Shorty	1

:: Reedy Motors / Spare Parts / Accessories

	MOTORS	
256	Sonic 540-M3 10.5	1
257	Sonic 540-M3 9.5	1
258	Sonic 540-M3 8.5	1
259	Sonic 540-M3 8.0	1
260	Sonic 540-M3 7.5	1
261	Sonic 540-M3 7.0	1
262	Sonic 540-M3 6.5	1
263	Sonic 540-M3 6.0	1
264	Sonic 540-M3 5.5	1
265	Sonic 540-M3 5.0	1
266	Sonic 540-M3 4.5	1
284	Sonic 540-M3 4.0	1
285	Sonic 540-M3 3.5	1
293	Sonic 540 FT 17.5 Fixed Timing	1
294	Sonic 540 FT 13.5 Fixed Timing	1
27401	S-Plus 21.5 Spec	1
27402	S-Plus 17.5 Spec	1
27403	S-Plus 13.5 Spec	1
27404	S-Plus 10.5 Spec	1
	SPARE PARTS/ACCESSORIES	
271	Sonic 540-M3 Spec Rotor 12.0 x 7.25 x 25.3	1
272	Sonic 540-M3 Spec Rotor 12.2 x 7.25 x 25.3	1
273	Sonic 540-M3 Spec Rotor 12.5 x 7.25 x 25.3	1
274	Sonic 540-M3 Mod Rotor 12.3 x 5.0 x 25.3	1
275	Sonic 540-M3 Mod Rotor 12.5 x 5.0 x 25.3	1
276	Sonic 540-M3 Mod Rotor 13.0 x 5.0 x 25.3	1
277	Sonic 540-M3 Stainless Steel Bearing Set	1
279	Sonic 540-M3 Sensor Assembly	1
280	Sonic 540-M3 Rotor Spacer Set	1
281	Sonic 540-M3 Case Screws w/Insulator	1
282	Sonic 540-M3 Motor Mounting Plate 1S	1
283	Sonic 540-M3 Motor Mounting Plate	1
286	540-M3/S-Plus Spec Rotor 12.3 x 7.25 x 25.3	1
295	Sonic 540-FT Spec Rotor 12.0 x 7.25 x 25.3	1
296	Sonic 540-M3 Mod Rotor 12.0 x 5.0 x 24.2	1
27414	540-M3/S-Plus Spec Rotor 12.5 x 7.15 x 24.2	1
27415	540-M3/S-Plus Spec Rotor 12.3 x 7.15 x 24.2	1
27416	540-M3/S-Plus Spec Rotor 12.0 x 7.15 x 24.2	1
27417	S-Plus Screw Set	1
27418	540-M3/S-Plus Lightweight Sensor Board	1
27419	S-Plus Front Plate	1
27420	540-M3/S-Plus Aluminum Case Screw Set	1
27421	540-M3/S-Plus Aluminum Timing Screw Set	1
	SENSOR WIRES	
978	Flat Sensor Wire 70mm	1
979	Flat Sensor Wire 110mm	1
980	Flat Sensor Wire 150mm	1
981	Flat Sensor Wire 200mm	1
982	Flat Sensor Wire 270mm	1
994	Flat Sensor Wire 125mm	1
995	Flat Sensor Wire 175mm	1

:: Reedy Accessories

643	Low Profile Bullet Plug 4mm x 14mm (2)	1
644	Low Profile Bullet Plug 4mm x 14mm (10)	1
645	Low Profile Bullet Plug 5mm x 14mm (2)	1
646	Low Profile Bullet Plug 5mm x 14mm (10)	1
647	Silicone Wire 12AWG-Black (1m)	1
648	Silicone Wire 14AWG-Black (1m)	1
650	Shrink Tubing - 15pcs 4.5mm x 20mm	1
791	Silicone Wire 13AWG-Black (30m)	1
792	Low Profile Caged Bullet Plug 4mm x 14mm (2)	1
793	Low Profile Caged Bullet Plug 4mm x 14mm (10)	1
794	Low Profile Caged Bullet Plug 5mm x 14mm (2)	1
795	Low Profile Caged Bullet Plug 5mm x 14mm (10)	1
27304	LiPo Battery Weight Set - Shorty	1

:: Reedy Chargers / Accessories

27200	1216-C2 Dual AC/DC Competition Battery Charger	1
27200CN	1216-C2 Dual AC/DC Competition Battery Charger - CHN Plug	1
27200EU	1216-C2 Dual AC/DC Competition Battery Charger - EURO Plug	1
27200UK	1216-C2 Dual AC/DC Competition Battery Charger - UK Plug	1
996	5.0mm 1S-2S Balance Charge lead w/SP Clip	1
997	4.0mm 1S-2S Balance Charge lead w/SP Clip	1
999	Saddle Pack Balance Charge Clip	1
27220	7-in-1 Universal Charge Lead (4mm)	1
27221	T-plug Charge Lead (4mm)	1
27222	XH 2-6S Balance Board (4mm)	1
27223	RX Charger Lead FUT (4mm)	1
27224	US to IEC 320 C5 angle 1M AC Power Cord	1
27225	US to IEC 320 C5 angle .5M AC Power Cord	1
27226	EU to IEC 320 C5 angle 1M AC Power Cord	1
27227	UK to IEC 320 C5 angle 1M AC Power Cord	1
27228	AU to IEC 320 C5 angle 1M AC Power Cord	1
27229	CN to IEC 320 C5 angle 1M AC Power Cord	1

:: Tools

1111	FT Turnbuckle Wrench	1
1112	FT 4mm Turnbuckle Wrench	1
1113	12mm Big Bore Shock Tool	1
1114	FT Dual Turnbuckle Wrench	1
1449	Off Road Ride Height Gauge	1
1452	FT TC Ride Height Gauge	1
1498	FT Universal Tire Balancer	1
1541	FT Hex Driver Set, (7 pcs)	1
1545	FT 5/64" Blue Hex Driver	1
1555	FT Clutch Gauge, 4 Shoe	1
1568	FT 5.5mm Short Nut Driver	1
1569	FT 7mm Nut Driver, T-Handle	1
1570	FT 5.5mm Short Nut Driver	1
1571	FT 1:8 Wheel Nut Wrench, 17mm Hex	1
1579	FT Ball Cup Wrench	1
1590	FT 3/32" Gold Ball Hex Driver	1
1592	FT Ball Hex Driver Set, (3 pcs)	1
1655	FT 8-Piece 1/4" Hex Drive Set	1
1656	FT 1/4" Hex Drive Handle, without tips	1
1657	FT 1/4" Hex Drive .050" Tip	1
1658	FT 1/4" Hex Drive 1/16" Tip	1
1659	FT 1/4" Hex Drive 5/64" - 2.0mm Tip	1
1660	FT 1/4" Hex Drive 3/32" Tip	1
1661	FT 1/4" Hex Drive 1.5mm Tip	1
1662	FT 1/4" Hex Drive 2.5mm Tip	1
1663	FT 1/4" Hex Drive 3/16" Nut Driver Tip	1
1664	FT 1/4" Hex Drive 1/4" Nut Driver Tip	1
1665	FT 1/4" Hex Drive 11/32" Nut Driver Tip	1
1666	FT 1/4" Hex Drive 5.5mm Nut Driver Tip	1
1667	FT 1/4" Hex Drive 7.0mm Nut Driver Tip	1
1668	FT 1/4" Hex Drive 8.0mm Nut Driver Tip	1
1669	FT 1/4" Hex Drive 5/64" - 2.0mm Ball End Tip	1
1670	FT 1/4" Hex Drive 3/32" Ball End Tip	1
1671	FT 1/4" Hex Drive Standard Screwdriver Tip	1
1672	FT 1/4" Hex Drive Phillips Screwdriver Tip	1
1673	FT 1/4" Hex Drive 2.5mm Ball End Tip	1
1674	FT 1/4" 5 Piece Power Tool Tips Set (5/64-2.0mm, 1.5mm, 2.5mm, 5/64"- 2.0mm ball, 2.5mm ball)	1
1675	FT Shock Shaft Pliers	1
1679	FT T-Handle Ratchet Driver	1
1719	FT Camber + Track Width Tool	1
1737	FT Body Scissors	1
3718	12 Inch Nylon Wire Ties	12
3719	6 Inch Nylon Wire Ties	12
3720	8 Inch Nylon Wire Ties	12
3987	FT Droop Gauge	1
7709	4 Inch Nylon Wire Ties	12

:: Factory Team and Option Parts

71104	T6.1 Front Suspension Arm (HARD)	Pr.
71106	T6.1 Rear Suspension Arm (HARD)	Pr.
71122	SC6.1 Side Rails (HARD)	Pr.
71128	Front Anti-roll Bar Set	1
71129	Rear Anti-roll Bar Set	1
71134	Anti-roll Bar Hardware	1
91494	FT 12mm Machined Shock Spacers, V2	1
91495	12mm V2 X-Ring Rebuild Kit	1
91553	Factory Team Bearing Kit, B5, B5M	1
91580	Titanium Screws, 3x6mm BHCS	4
91581	Titanium Screws, 3x8mm BHCS	4
91582	Titanium Screws, 3x10mm BHCS	4
91583	Titanium Screws, 3x12mm BHCS	4
91584	Titanium Screws, 3x14mm BHCS	4
91585	Titanium Screws, 3x16mm BHCS	4
91588	Titanium Screws, 3x22mm BHCS	4
91589	Titanium Screws, 3x24mm BHCS	4
91592	Titanium Screws, 3x8mm FHCS	4
91593	Titanium Screws, 3x10mm FHCS	4
91594	Titanium Screws, 3x12mm FHCS	4
91595	Titanium Screws, 3x14mm FHCS	4
91596	Titanium Screws, 3x16mm FHCS	4
91597	Titanium Screws, 3x18mm FHCS	4
91609	Clamping Wheel Hex, (5.0mm)	2
91658	RC10B6 Aluminum Front Bulkhead	1
91659	RC10B6 Brass Front Bulkhead	1
91668	RC10B6 Aluminum Steering Bell Crank	1
91669	RC10B6 Aluminum Steering Rack	1
91680	B6 FT Steering Block Arms, +1	Pr.
91689	FT Brass Arm Mount D, 12g	1
91699	FT Aluminum Rear Hub Link	2
91707	RC10B6 Stand-Up Gear Box, 4 Gear - Req. #91711, #91714	1
91711	RC10B6 Gear Cover, 4 Gear - Req. #91707, #91714	1
91714	RC10B6 Stand-Up Motor Plate, 4 Gear Req. #91707, #91711	1
91745	RC10B6 Aluminum Chassis Weight (9g)	1
91746	RC10B6 Aluminum Chassis Weight (13g)	1
91747	RC10B6 Steel Chassis Weight (24g)	1
91748	RC10B6 Steel Chassis Weight (36g)	1
91749	M2 x 3mm FHCS - Use with #91747, 91748, 91754	6
91750	HD Titanium Ball Stud, 4mm	2
91751	HD Titanium Ball Stud, 6mm	2
91752	HD Titanium Ball Stud, 8mm	2
91753	HD Titanium Ball Stud, 10mm	2
91754	FT Graphite ESC Plate	1
91755	RC10B6 Titanium Screw Kit	1
91773	B6.1 Brass Arm Mount (C)	1
91784	B6.1 Aluminum Cross Pins	2
91786	B6.1 Gear Diff Kit	1
91800	B6.1 Direct Drive Kit	1
92098	B64 FT Blue Aluminum Rear Hubs	Pr.
92099	B64 FT Black Aluminum Rear Hubs	Pr.

:: MyLaps Transponders

MLP10R078	MyLaps Hybrid (2-wire) Transponder	1
MLP10R078BK	MyLaps Hybrid Black Edition (2-wire) Transponder	1
MLP10R120	MyLaps RC4 (3-wire) Transponder	1
MLP10R120BK	MyLaps RC4 Black Edition (3-wire) Transponder	1
MLP40R222	MyLaps Transponder Holder	1

:: Lubes & Adhesives / Decals / Misc.

1105	FT Green Slime Shock Lube	1
1596	FT Locking Adhesive	1
1597	FT Tire Adhesive, medium	1
6588	Black Grease - 4cc	1
6591	S.Diff Lube - 4cc	1
6636	Silicone Grease - 4cc	1
6727	Servo Tape	2
726	Reedy 2016 Sticker Set	1
3840	2016 Team Associated Decal Sheet	1
9787	FT Chassis Protective Sheet	1
71131	SC6.1 Decal Sheet	1

:: Apparel / Promotional

	TEE SHIRTS	
SP11*	2016 Worlds T-shirt, blue, (S, M, L, XL-5XL)	1
SP12*	2016 Worlds T-shirt, black, (S, M, L, XL-5XL)	1
SP113*	AE Worlds Car Retro T-Shirt, (S, XL, 2XL)	1
SP120*	AE 3/4 Sleeve Tee, Gray (S, M, L, XL-3XL)	1
SP121*	Kids AE Speed Tee, Black (S, M, L)	1
SP122*	Ladies AE Speed Tee, Black (S, M, L, XL	1
SP123*	Mens AE Speed Tee, Navy (S, M, L, XL-5XL)	1
SP124*	AE 2017 Worlds Tee, Black (S, M, L, XL-3XL)	1
SP140*	Reedy Heritage Tee, Black (S, M, L, XL-5XL)	1
	HOODIES/JACKETS	
SP13*	AE Lite Jacket - Black - (S, M, L, XL, 2XL)	1
SP71*	AE Winter Jacket - Black (S, M, L, XL, 2XL)	1
SP141*	Reedy R Hoodie - Black (S, M, L, XL-3XL)	1
	HATS	
SP20	AE Patch Trucker Hat	1
SP38	Reedy Trucker Hat	1
SP406	2017 Reedy Power Hat, Black	1
SP407	2017 Team Associated Hat, Gray	1
SP408	AE Worlds Hat	1
SP423S	AE 2012 Hat, White, Flat Bill, S/M	1
SP423L	AE 2012 Hat, White, Flat Bill, L/XL	1
SP424S	AE 2012 Hat, White, Curved Bill, S/M	1
	BANNERS/MATS CARRIERS	
SP29	Team Associated Countertop/Setup Mat	1
SP30	Team Associated Pit Mat	1
SP31	Reedy Countertop/Setup Mat	1
SP115	Reedy Circuit Cloth Banner	1
SP425	FT Fluid Carrier	1
SP426	Team Associated Countertop / Setup Mat	1
SP427	Reedy Countertop / Setup Mat	1
110684	Team Associated Track Banner	1
110685	Team Associated Cloth Banner	1

** Use part number plus the desired size when ordering!*

RC10 SC6.1 TEAM KIT

Driver: Team Kit Stock Setup **Event:** _____
Date: _____ **Track:** _____
Qualify: _____ **TQ:** ☐ **Main:** _____ **Finish:** _____ **Best Lap Time:** _____

Front Suspension:

Ride Height:	30mm
Camber:	-1°
Toe:	0°
Arm Type:	Kit #71103
Tower Type:	Kit #71115
Caster Block Insert:	+5°
Steering Block:	4mm
Bulkhead Type:	Plastic
Kick-Up Angle:	25°
Wheel Hex:	8.5mm

Notes: _____

Anti Roll Bar:
- White (0.8mm) ☐
- Gray (0.9mm) ☐
- Blue (1.0mm) ☐
- Other: _____ ☐

Bump Steer Spacing: 1mm

Axle Height:
- +3 ☐
- +2 ☐
- +1 ■
- 0 ☐

Ball Stud Spacing: 2mm

Steering Plate: Kit #91679

Steering Stop Spacing: 0

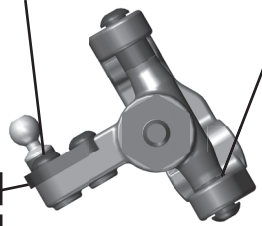

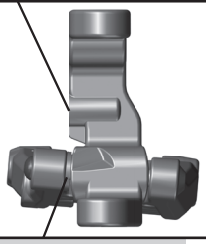

Caster Block Spacing: 1mm

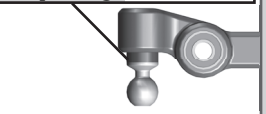

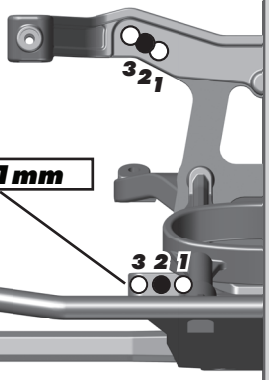

Ball Stud Spacing: 1mm

Rear Suspension:

Ride Height:	28mm
Camber:	-1°
Arm Type:	Kit #71105
Tower Type:	Kit #71116
Wheel Hex:	7.0mm

Hub Spacing: Forward ☐ Middle ■ Back ☐

Shock Mounting Position: Front of Arm ☐ Rear of Arm ■

Notes: _____

Anti Roll Bar:
- White (1.2mm) ☐
- Gray (1.3mm) ☐
- Blue (1.4mm) ☐
- Other: _____ ☐

Rear Hub Link Setting: Plastic Hub ■ Aluminum Hub ☐ Ball Stud Spacing: _____

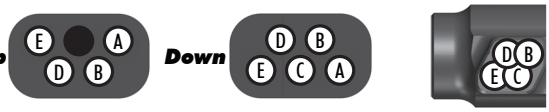

C Mount Inserts: 1° ☐ 0.5° ☐
Aluminum ■ Brass ☐

D Mount Inserts: 1° ☐ 0.5° ☐
Aluminum ■ Brass ☐

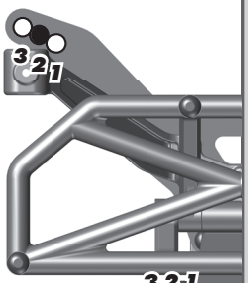

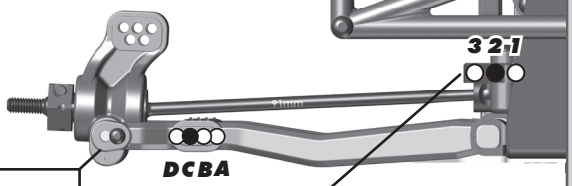

Hub Insert: +3 ☐ +2 ☐ +1 ☐ 0 ■

Ball Stud Spacing: 1mm

Electronics:

Radio:	Servo:
EPA: Throttle: %	Brake: %
ESC:	
ESC Settings:	
Motor:	
Wind:	Timing:
Pinion:	Spur:
Battery:	
Battery Position:	2F

Drivetrain:

Transmission: Laydown: ☐
3 Gear: ■ Layback: ■
4 Gear: ☐ Stand Up: ☐

Differential: Ball Diff: ■
Height: 0 Gear Diff: ☐

Notes: _____

Slipper Clutch:

Type:	Kit
# of Pads:	2

Shocks:

	Front	Rear
Piston:	2 x 1.6	2 x 1.7
Fluid:	30	30
Spring:	White 54mm	Green 72mm
Limiters:	2	1
Stroke:	26.5mm	35mm
Eyelet Length:	Long	Long
Cup Offset:	5mm	5mm
Notes:		

Track Info:

Size:	Small ☐	Medium ☐	Large ☐	Extra Large ☐
Surface:	Dirt ☐	Carpet ☐	Astroturf ☐	Multi Surface ☐
Traction:	Low ☐	Medium ☐	High ☐	Very High ☐
Moisture:	Dry ☐	Damp ☐	Wet ☐	
Condition:	Indoor ☐	Outdoor ☐	Dusty ☐	Hard Packed ☐
	Bumpy ☐	Grooved ☐	Smooth ☐	Loamy ☐

Temperature: Ambient: Track:

Notes: _____

Tires:

Front Tires:	
Front Compound:	
Front Insert:	
Rear Tires:	
Rear Compound:	
Rear Insert:	
Wheel (F/R):	
Notes:	

Body, Wing, Weight:

Body: _____

Body Height: _____

Servo Weights: _____
None ■ Aluminum ☐ Steel ☐ Other ☐

Electronic Weights: _____
None ■ Aluminum ☐ Steel ☐ Other ☐

Total Vehicle Weight:

Vehicle Comments:

Notes: _____

RC10 SC6.1 TEAM KIT

Driver: _____ **Event:** _____
Date: _____ **Track:** _____
Qualify: _____ **TQ:** ☐ **Main:** _____ **Finish:** _____ **Best Lap Time:** _____

Front Suspension:

Ride Height:
Camber:
Toe:
Arm Type:
Tower Type:
Caster Block Insert:
Steering Block:
Bulkhead Type:
Kick-Up Angle:
Wheel Hex:
Notes: _____

Anti Roll Bar:
- White (0.8mm) ☐
- Gray (0.9mm) ☐
- Blue (1.0mm) ☐
- Other: _____ ☐

Bump Steer Spacing:

Axle Height:
- +3 ☐
- +2 ☐
- +1 ☐
- 0 ☐

Ball Stud Spacing:

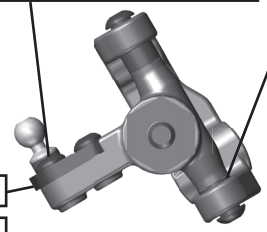

Steering Plate:

Steering Stop Spacing:

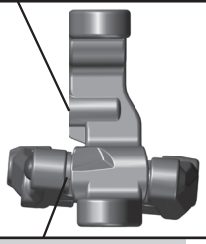

Caster Block Spacing:

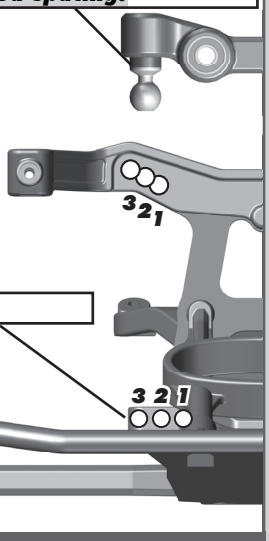

Ball Stud Spacing:

Rear Suspension:

Ride Height:
Camber:
Arm Type:
Tower Type:
Wheel Hex:
Hub Spacing: Forward ☐ Middle ☐ Back ☐
Shock Mounting Position: Front of Arm ☐ Rear of Arm ☐
Notes: _____

Anti Roll Bar:
- White (1.2mm) ☐
- Gray (1.3mm) ☐
- Blue (1.4mm) ☐
- Other: _____ ☐

Rear Hub Link Setting: Plastic Hub ☐ Aluminum Hub ☐ Ball Stud Spacing: _____

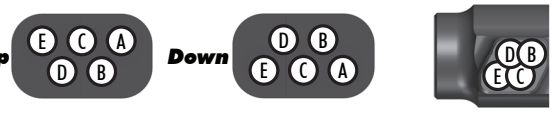

C Mount Inserts: 1° ☐ 0.5° ☐
Aluminum ☐ Brass ☐

D Mount Inserts: 1° ☐ 0.5° ☐
Aluminum ☐ Brass ☐

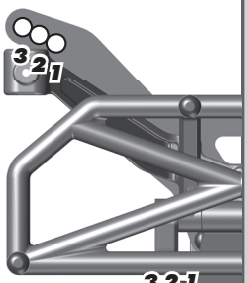

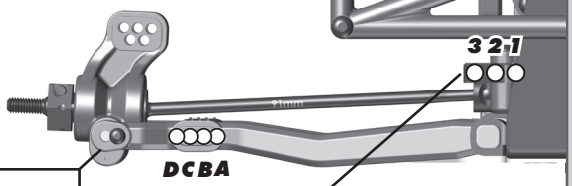

Hub Insert: +3 ☐ +2 ☐ +1 ☐ 0 ☐

Ball Stud Spacing:

Electronics:

Radio: **Servo:**
EPA: Throttle: % Brake: %
ESC:
ESC Settings:
Motor:
Wind: **Timing:**
Pinion: **Spur:**
Battery:
Battery Position:

Drivetrain:

Transmission: **Laydown:** ☐
3 Gear: ☐ **Layback:** ☐
4 Gear: ☐ **Stand Up:** ☐
Differential: **Ball Diff:** ☐
Height: _____ **Gear Diff:** ☐
Notes:

Slipper Clutch:

Type:
# of Pads:

Shocks:

	Front	Rear
Piston:		
Fluid:		
Spring:		
Limiters:		
Stroke:		
Eyelet Length:		
Cup Offset:		
Notes:		

Track Info:

Size:	Small ☐	Medium ☐	Large ☐	Extra Large ☐
Surface:	Dirt ☐	Carpet ☐	Astroturf ☐	Multi Surface ☐
Traction:	Low ☐	Medium ☐	High ☐	Very High ☐
Moisture:	Dry ☐	Damp ☐	Wet ☐	
Condition:	Indoor ☐	Outdoor ☐	Dusty ☐	Hard Packed ☐
	Bumpy ☐	Grooved ☐	Smooth ☐	Loamy ☐

Temperature: Ambient: Track:
Notes:

Tires:

Front Tires:
Front Compound:
Front Insert:
Rear Tires:
Rear Compound:
Rear Insert:
Wheel (F/R):
Notes:

Body, Wing, Weight:

Body: _____
Body Height: _____
Servo Weights: _____
None ☐ Aluminum ☐ Steel ☐ Other ☐
Electronic Weights: _____
None ☐ Aluminum ☐ Steel ☐ Other ☐
Total Vehicle Weight:

Vehicle Comments:

Notes:

:: For more setups, visit RC10.com and click on "Setup Sheets"

Associated Electrics, Inc.
26021 Commercentre Dr.
Lake Forest, CA 92630 USA
http://www.RC10.com
https://twitter.com/Team_Associated
https://www.instagram.com/teamassociatedrc/
https://www.facebook.com/TeamAssociated/

call: (949) 544-7500 - fax: (949) 544-7501
Check out the following web sites for all of our kits, current products, new releases, setup help, tips, and racing info!
www.TeamAssociated.com. - www.RC10.com